MOSFET – N-Channel, POWERTRENCH®, SyncFET™

30 V, 18 A, 9.3 mΩ

FDMC7692S

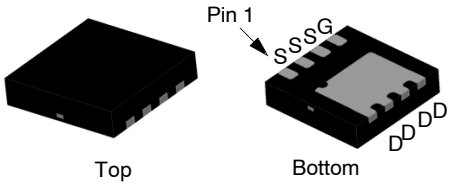

WDFN8 3.3x3.3, 0.65P
CASE 511DQ (Option A)

General Description

This FDMC7692S is produced using **onsemi's** advanced POWERTRENCH process that has been especially tailored to minimize the on-state resistance. This device is well suited for Power Management and load switching applications common in Notebook Computers and Portable Battery Packs.

Features

- Max $r_{DS(on)}$ = 9.3 mΩ at V_{GS} = 10 V, I_D = 12.5 A
- Max $r_{DS(on)}$ = 13.6 mΩ at V_{GS} = 4.5 V, I_D = 10.4 A
- High Performance Technology for Extremely Low $r_{DS(on)}$
- These Devices are Pb-Free and are RoHS Compliant

Applications

- DC – DC Buck Converters
- Notebook DC – DC Application

MARKING DIAGRAM

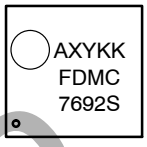

FDMC7692S = Specific Device Code
A = Assembly Location
XY = 2-Digit Date Code
KK = 2-Digit Lot Run Traceability Code

PIN ASSIGNMENT

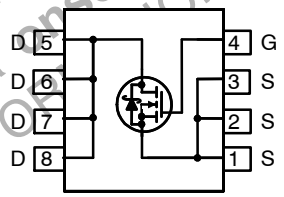

ORDERING INFORMATION

See detailed ordering and shipping information on page 6 of this data sheet.

DISCONTINUED
THIS DEVICE IS NOT AVAILABLE
PLEASE CONTACT YOUR onsemi
REPRESENTATIVE FOR INFORMATION

MOSFET MAXIMUM RATINGS (T_A = 25 °C unless otherwise noted)

Symbol	Parameter			Rating	Unit
V_{DS}	Drain to Source Voltage			30	V
V_{GS}	Gate to Source Voltage			±20	V
I_D	Drain Current	Continuous	T_C = 25 °C	18	A
		Continuous (Note 1a)	T_A = 25 °C	12.5	
		Pulsed		45	
E_{AS}	Single Pulse Avalanche Energy (Note 2)			21	mJ
P_D	Power Dissipation		T_C = 25 °C	27	W
	Power Dissipation (Note 1a)		T_A = 25 °C	2.3	
T_J, T_{STG}	Operating and Storage Junction Temperature Range			−55 to 150	°C

Stresses exceeding those listed in the Maximum Ratings table may damage the device. If any of these limits are exceeded, device functionality should not be assumed, damage may occur and reliability may be affected.

THERMAL CHARACTERISTICS

Symbol	Parameter	Rating	Unit
$R_{\theta JC}$	Thermal Resistance, Junction to Case	4.7	°C/W
$R_{\theta JA}$	Thermal Resistance, Junction to Ambient (Note 1a)	53	

1. $R_{\theta JA}$ is determined with the device mounted on a 1 in^2 pad 2 oz copper pad on a 1.5 x 1.5 in. board of FR-4 material. $R_{\theta JC}$ is guaranteed by design while $R_{\theta CA}$ is determined by the user's board design.

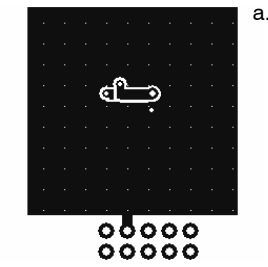

a. 53 °C/W when mounted on a 1 in^2 pad of 2 oz copper

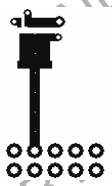

b. 125 °C/W when mounted on a minimum pad of 2 oz copper

2. E_{AS} of 21 mJ is based on starting T_J = 25 °C; L = 0.3 mH, I_{AS} = 12.0 A, V_{DD} = 27 V, V_{GS} = 10 V. 100% test at L = 3 mH, I_{AS} = 3.2 A.

DISCONTINUED
THIS DEVICE IS NO
PLEASE CONTAC
REPRESENTATIVE FOR
ILABLE
onsemi
ORMATION

ELECTRICAL CHARACTERISTICS (T_J = 25 °C unless otherwise noted)

Symbol	Parameter	Test Conditions	Min	Typ	Max	Unit
OFF CHARACTERISTICS						
BV_{DSS}	Drain to Source Breakdown Voltage	I_D = 1 mA, V_{GS} = 0 V	30	–	–	V
ΔBV_{DSS} / ΔT_J	Breakdown Voltage Temperature Coefficient	I_D = 10 mA, referenced to 25 °C	–	16	–	mV/°C
I_{DSS}	Zero Gate Voltage Drain Current	V_{DS} = 24 V, V_{GS} = 0 V	–	–	500	μA
I_{GSS}	Gate to Source Leakage Current	V_{GS} = 20 V, V_{DS} = 0 V	–	–	100	nA
ON CHARACTERISTICS (Note 3)						
$V_{GS(th)}$	Gate to Source Threshold Voltage	V_{GS} = V_{DS}, I_D = 1 mA	1.2	2.0	3.0	V
$\Delta V_{GS(th)}$ / ΔT_J	Gate to Source Threshold Voltage Temperature Coefficient	I_D = 10 mA, referenced to 25 °C	–	–5	–	mV/°C
$r_{DS(on)}$	Static Drain to Source On Resistance	V_{GS} = 10 V, I_D = 12.5 A	–	7.8	9.3	mΩ
		V_{GS} = 4.5 V, I_D = 10.4 A	–	10.8	13.6	
		V_{GS} = 10 V, I_D = 12.5 A, T_J = 125 °C	–	9.6	13.0	
g_{FS}	Forward Transconductance	V_{DS} = 5 V, I_D = 12.5 A	–	62	–	S
DYNAMIC CHARACTERISTICS						
C_{iss}	Input Capacitance	V_{DS} = 15 V, V_{GS} = 0 V, f = 1 MHz	–	1040	1385	pF
C_{oss}	Output Capacitance		–	445	590	pF
C_{rss}	Reverse Transfer Capacitance		–	40	60	pF
R_g	Gate Resistance	f = 1 MHz	–	1.1	2.9	Ω
SWITCHING CHARACTERISTICS						
$t_{d(on)}$	Turn-On Delay Time	V_{DD} = 15 V, I_D = 12.5 A, V_{GS} = 10 V, R_{GEN} = 6 Ω	–	9	17	ns
t_r	Rise Time		–	3	10	ns
$t_{d(off)}$	Turn-Off Delay Time		–	19	34	ns
t_f	Fall Time		–	3	10	ns
Q_g	Total Gate Charge	V_{GS} = 0 V to 10 V, V_{DD} = 15 V, I_D = 12.5 A	–	16	23	nC
		V_{GS} = 0 V to 4.5 V, V_{DD} = 15 V, I_D = 12.5 A	–	8	10	nC
Q_{gs}	Total Gate Charge	V_{DD} = 15 V, I_D = 12.5 A	–	4	–	nC
Q_{gd}	Gate to Drain “Miller” Charge		–	2	–	nC
DRAIN–SOURCE DIODE CHARACTERISTICS						
V_{SD}	Source to Drain Diode Forward Voltage	V_{GS} = 0 V, I_S = 12.5 A (Note 3)	–	0.9	1.3	V
		V_{GS} = 0 V, I_S = 0.9 A (Note 3)	–	0.5	0.7	
t_{rr}	Reverse Recovery Time	I_F = 12.5 A, di/dt = 300 A/μs	–	21	33	ns
Q_{rr}	Reverse Recovery Charge		–	16	29	nC

Product parametric performance is indicated in the Electrical Characteristics for the listed test conditions, unless otherwise noted. Product performance may not be indicated by the Electrical Characteristics if operated under different conditions.

3. Pulse Test: Pulse Width < 300 μs, Duty cycle < 2.0%.

DISCONTINUED
THIS DEVICE IS NOT AVAILABLE
PLEASE CONTACT YOUR onsemi
REPRESENTATIVE FOR INFORMATION

TYPICAL CHARACTERISTICS (T_J = 25 °C unless otherwise noted)

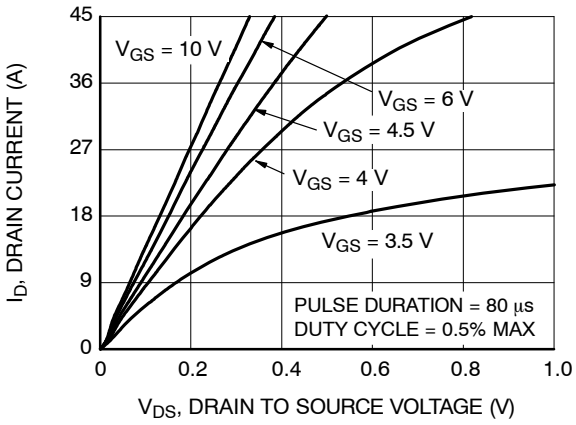

Figure 1. On Region Characteristics

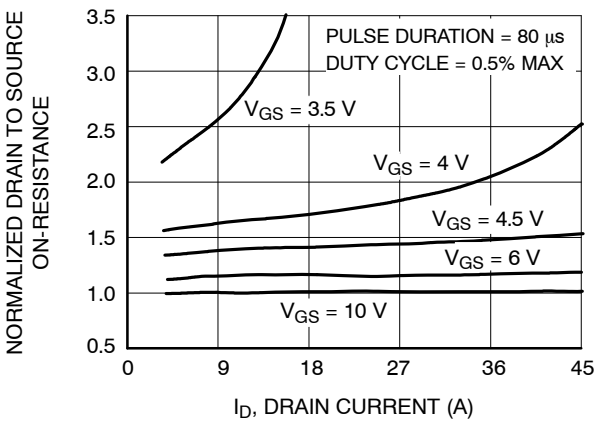

Figure 2. Normalized On-Resistance vs. Drain Current and Gate Voltage

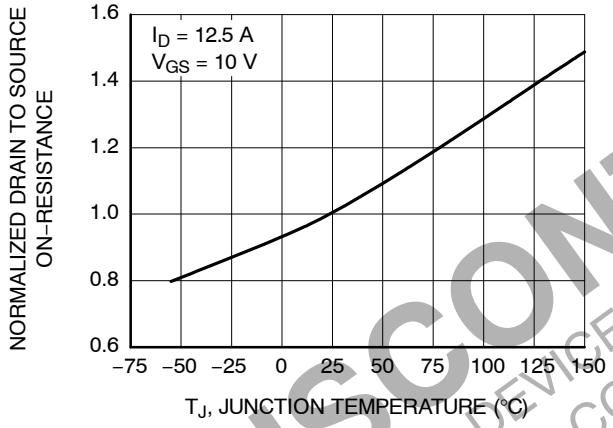

Figure 3. Normalized On Resistance vs. Junction Temperature

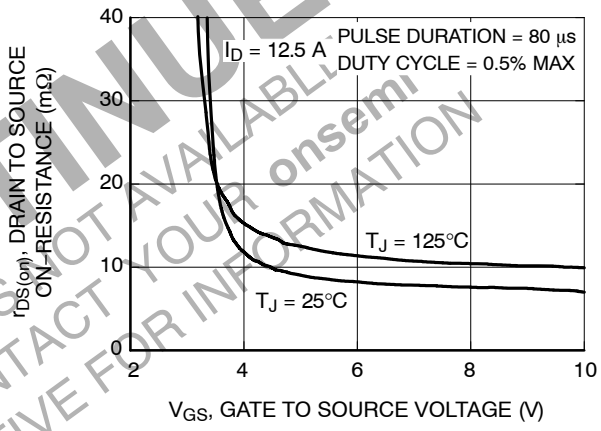

Figure 4. On-Resistance vs. Gate to Source Voltage

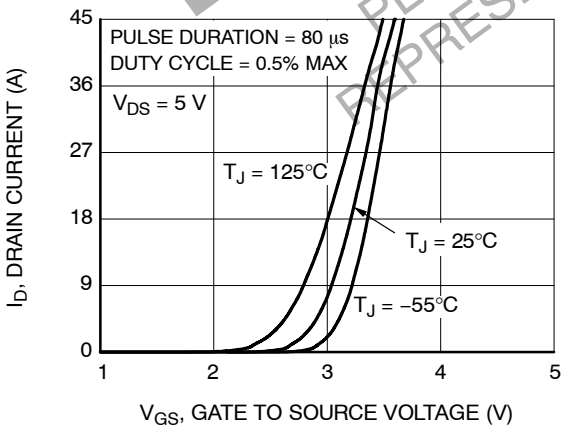

Figure 5. Transfer Characteristics

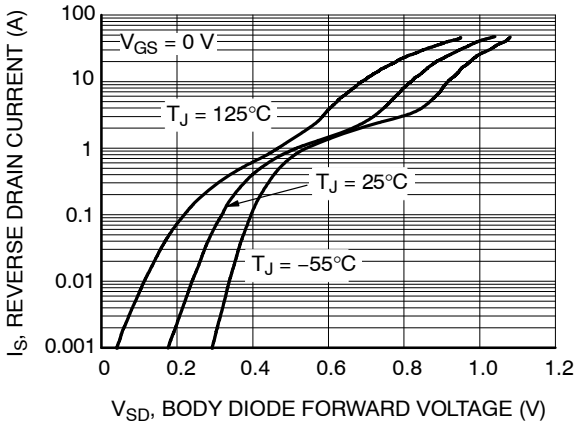

Figure 6. Source to Drain Diode Forward Voltage vs. Source Current

DISCONTINUED
THIS DEVICE IS NOT AVAILABLE
PLEASE CONTACT YOUR onsemi
REPRESENTATIVE FOR INFORMATION

TYPICAL CHARACTERISTICS (T_J = 25 °C unless otherwise noted) (continued)

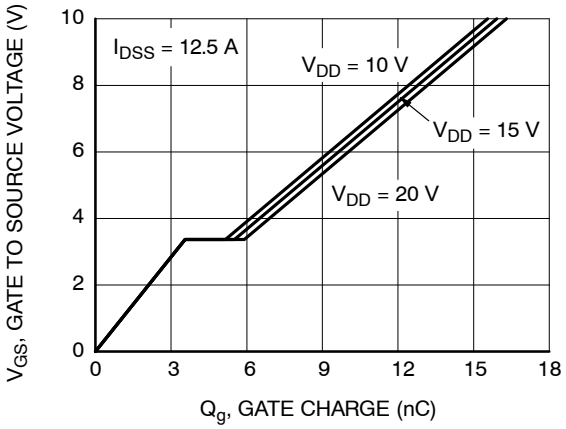

Figure 7. Gate Charge Characteristics

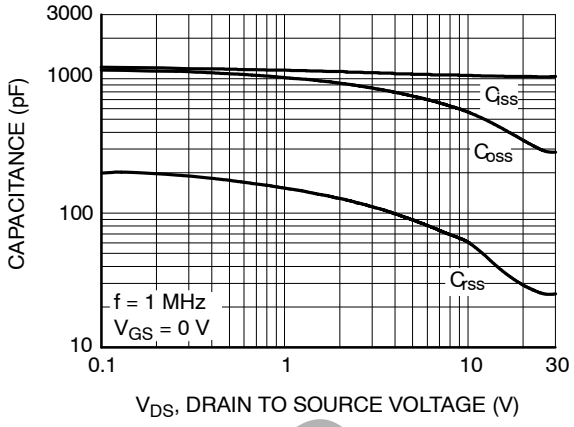

Figure 8. Capacitance vs. Drain to Source Voltage

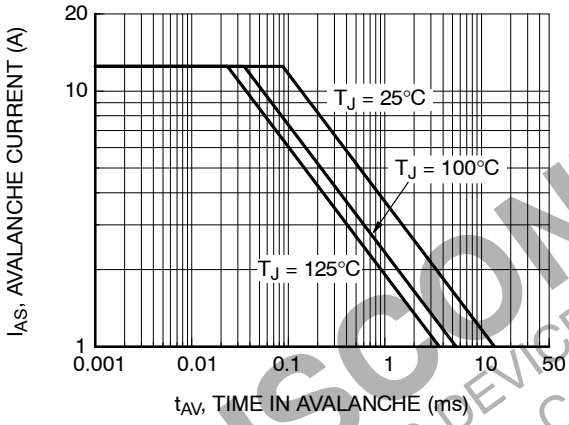

Figure 9. Unclamped Inductive Switching Capability

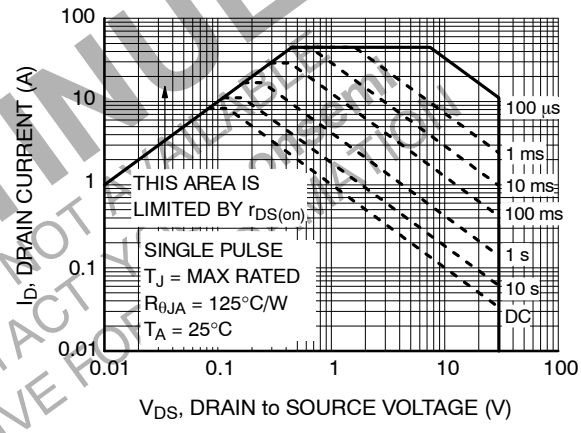

Figure 10. Forward Bias Safe Operating Area

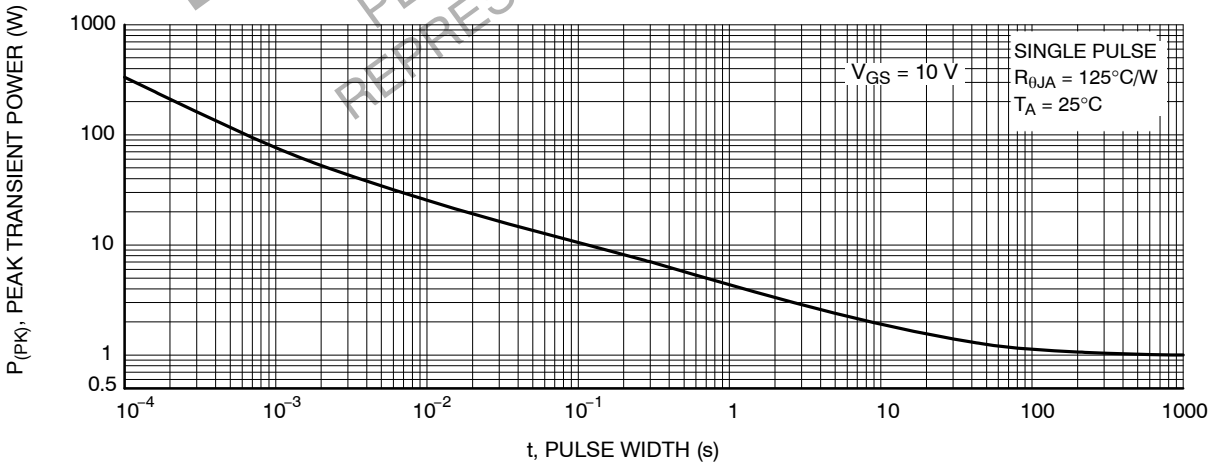

Figure 11. Single Pulse Maximum Power Dissipation

DISCONTINUED
THIS DEVICE IS NOT RECOMMENDED FOR NEW DESIGN
PLEASE CONTACT YOUR onsemi
REPRESENTATIVE FOR ALTERNATIVES

TYPICAL CHARACTERISTICS (T_J = 25 °C unless otherwise noted) (continued)

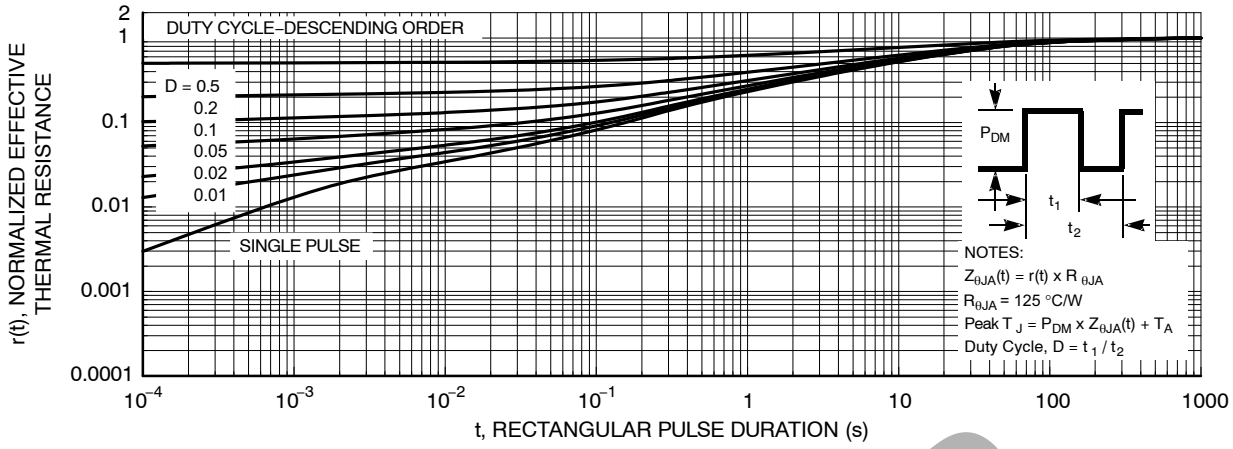

Figure 12. Junction-to-Ambient Transient Thermal Response Curve

DISCONTINUED
THIS DEVICE IS NOT AVAILABLE
PLEASE CONTACT YOUR onsemi
REPRESENTATIVE FOR INFORMATION

ORDERING INFORMATION

Device	Device Marking	Package Type	Shipping†
FDMC7692S	FDMC7692S	WDFN8 3.3x3.3, 0.65P case 511DQ (Pb-Free)	3000 / Tape & Reel

†For information on tape and reel specifications, including part orientation and tape sizes, please refer to our Tape and Reel Packaging Specifications Brochure, BRD8011/D.

REVISION HISTORY

Revision	Description of Changes	Date
3	Data Sheet Discontinued.	11/10/2025

This document has undergone updates prior to the inclusion of this revision history table. The changes tracked here only reflect updates made on the noted approval dates.

DISCONTINUED
THIS DEVICE IS NOT AVAILABLE
PLEASE CONTACT YOUR onsemi
REPRESENTATIVE FOR INFORMATION

POWERTRENCH is a registered trademark of Semiconductor Components Industries, LLC dba “**onsemi**” or its affiliates and/or subsidiaries in the United States and/or other countries.
SyncFET is a trademark of Semiconductor Components Industries, LLC dba “**onsemi**” or its affiliates and/or subsidiaries in the United States and/or other countries.

WDFN8 3.3x3.3, 0.65P
CASE 511DQ
ISSUE O

DATE 31 OCT 2016

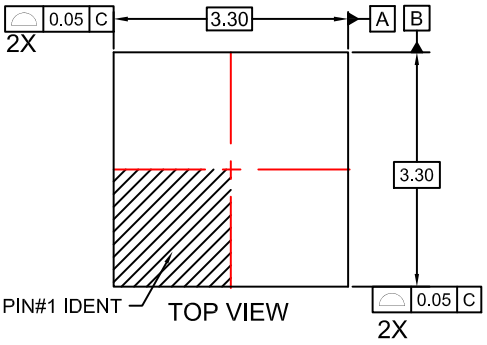

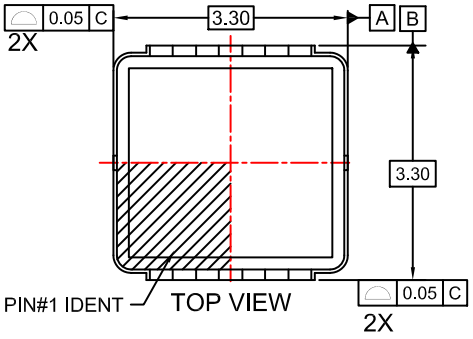

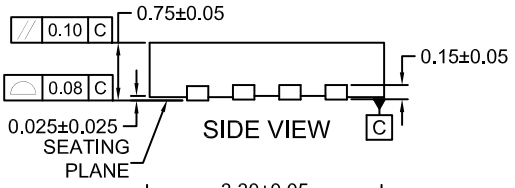

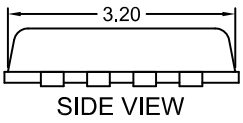

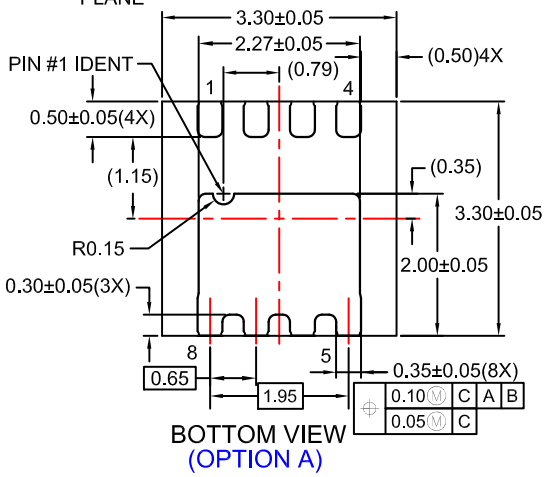

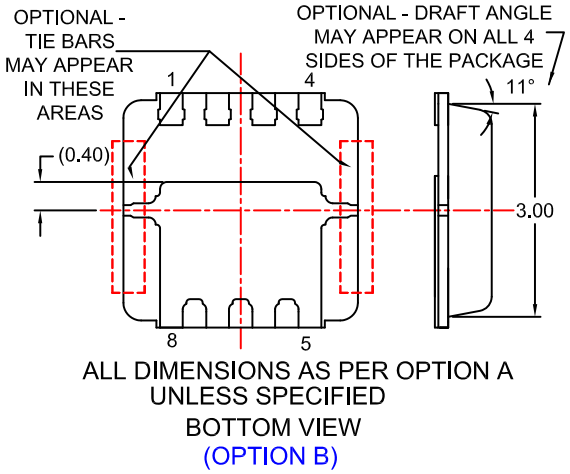

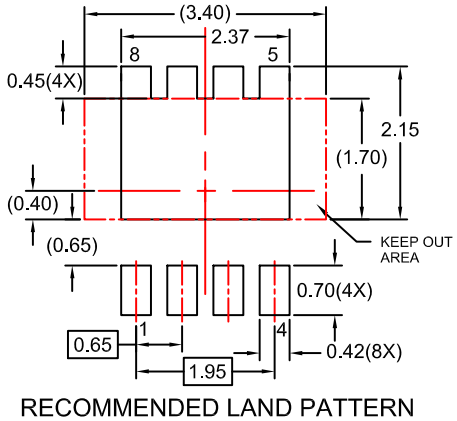

DOCUMENT NUMBER:	**98AON13648G**	Electronic versions are uncontrolled except when accessed directly from the Document Repository. Printed versions are uncontrolled except when stamped "CONTROLLED COPY" in red.	
DESCRIPTION:	**WDFN8 3.3X3.3, 0.65P**		**PAGE 1 OF 2**

onsemi and onsemi are trademarks of Semiconductor Components Industries, LLC dba **onsemi** or its subsidiaries in the United States and/or other countries. **onsemi** reserves the right to make changes without further notice to any products herein. **onsemi** makes no warranty, representation or guarantee regarding the suitability of its products for any particular purpose, nor does **onsemi** assume any liability arising out of the application or use of any product or circuit, and specifically disclaims any and all liability, including without limitation special, consequential or incidental damages. **onsemi** does not convey any license under its patent rights nor the rights of others.

WDFN8 3.3x3.3, 0.65P
CASE 511DQ
ISSUE O

DATE 31 OCT 2016

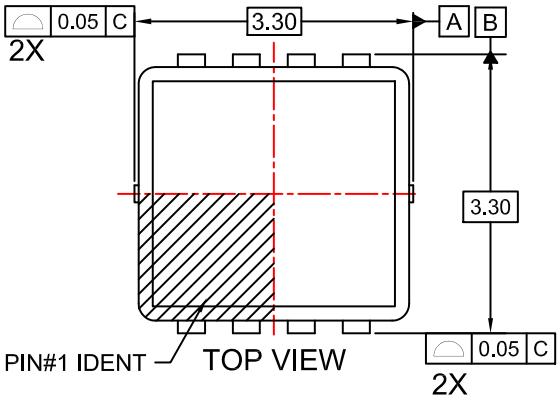

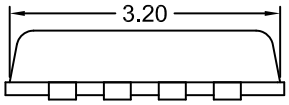

SIDE VIEW

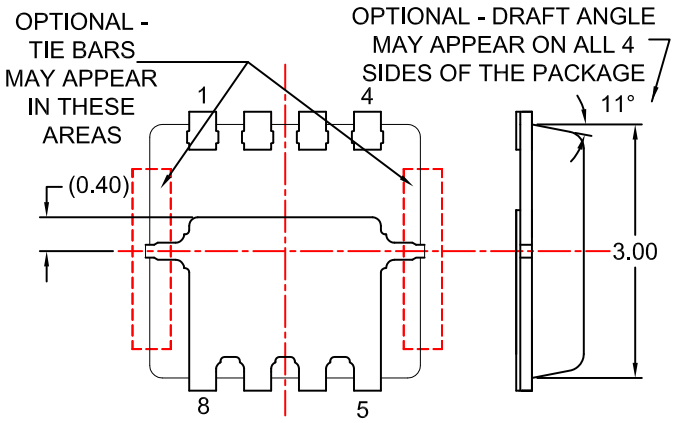

ALL DIMENSIONS AS PER OPTION A UNLESS SPECIFIED

BOTTOM VIEW
(OPTION C)

NOTES:

A. PACKAGE DOES NOT FULLY CONFORM TO JEDEC REGISTRATION MO-240.
B. DIMENSIONS ARE IN MILLIMETERS.
C. DIMENSIONS AND TOLERANCES PER ASME Y14.5M, 2009.
D. LAND PATTERN RECOMMENDATION IS EXISTING INDUSTRY LAND PATTERN
E. DIMENSIONS DO NOT INCLUDE BURRS OR MOLD FLASH. BURRS OR MOLD FLASH SHALL NOT EXCEED 0.10MM.

DOCUMENT NUMBER:	**98AON13648G**	Electronic versions are uncontrolled except when accessed directly from the Document Repository. Printed versions are uncontrolled except when stamped "CONTROLLED COPY" in red.	
DESCRIPTION:	**WDFN8 3.3X3.3, 0.65P**		**PAGE 2 OF 2**

onsemi and ONSEMI are trademarks of Semiconductor Components Industries, LLC dba **onsemi** or its subsidiaries in the United States and/or other countries. **onsemi** reserves the right to make changes without further notice to any products herein. **onsemi** makes no warranty, representation or guarantee regarding the suitability of its products for any particular purpose, nor does **onsemi** assume any liability arising out of the application or use of any product or circuit, and specifically disclaims any and all liability, including without limitation special, consequential or incidental damages. **onsemi** does not convey any license under its patent rights nor the rights of others.

onsemi, , and other names, marks, and brands are registered and/or common law trademarks of Semiconductor Components Industries, LLC dba "**onsemi**" or its affiliates and/or subsidiaries in the United States and/or other countries. **onsemi** owns the rights to a number of patents, trademarks, copyrights, trade secrets, and other intellectual property. A listing of **onsemi**'s product/patent coverage may be accessed at www.onsemi.com/site/pdf/Patent−Marking.pdf. **onsemi** reserves the right to make changes at any time to any products or information herein, without notice. The information herein is provided "as−is" and **onsemi** makes no warranty, representation or guarantee regarding the accuracy of the information, product features, availability, functionality, or suitability of its products for any particular purpose, nor does **onsemi** assume any liability arising out of the application or use of any product or circuit, and specifically disclaims any and all liability, including without limitation special, consequential or incidental damages. Buyer is responsible for its products and applications using **onsemi** products, including compliance with all laws, regulations and safety requirements or standards, regardless of any support or applications information provided by **onsemi**. "Typical" parameters which may be provided in **onsemi** data sheets and/or specifications can and do vary in different applications and actual performance may vary over time. All operating parameters, including "Typicals" must be validated for each customer application by customer's technical experts. **onsemi** does not convey any license under any of its intellectual property rights nor the rights of others. **onsemi** products are not designed, intended, or authorized for use as a critical component in life support systems or any FDA Class 3 medical devices or medical devices with a same or similar classification in a foreign jurisdiction or any devices intended for implantation in the human body. Should Buyer purchase or use **onsemi** products for any such unintended or unauthorized application, Buyer shall indemnify and hold **onsemi** and its officers, employees, subsidiaries, affiliates, and distributors harmless against all claims, costs, damages, and expenses, and reasonable attorney fees arising out of, directly or indirectly, any claim of personal injury or death associated with such unintended or unauthorized use, even if such claim alleges that **onsemi** was negligent regarding the design or manufacture of the part. **onsemi** is an Equal Opportunity/Affirmative Action Employer. This literature is subject to all applicable copyright laws and is not for resale in any manner.

ADDITIONAL INFORMATION

TECHNICAL PUBLICATIONS:
Technical Library: www.onsemi.com/design/resources/technical−documentation
onsemi Website: www.onsemi.com

ONLINE SUPPORT: www.onsemi.com/support
For additional information, please contact your local Sales Representative at www.onsemi.com/support/sales

ENTEGRECİ

Bu belge www.entegreci.com üzerinden sunulmaktadır.

Elektronik komponent tedarikinde Entegreci

Entegreci, Eskişehir merkezli, Türkiye geneline satış yapan bir elektronik komponent mağazasıdır. Entegreler (IC), mikrodenetleyiciler, transistörler, diyotlar, pasif elemanlar, konnektörler, modüller ve geliştirme kartları tek adetten seri üretim adetlerine kadar satılır. Ürün sayfalarında güncel stok durumunu, fiyatı ve datasheet bağlantısını bulabilirsiniz.

Parça koduyla arama

Üretici parça numarasını yazın; stok ve fiyatı hemen görün.

www.entegreci.com

Ürün kategorileri

Entegreden kapasitöre tüm elektronik komponent kategorileri.

Kategorilere göz atın

Üreticiler

Aradığınız üreticinin ürünlerini tek sayfada inceleyin.

Üreticileri görün

Toplu alım ve teklif

Listede olmayan ya da yüksek adetli parçalar için teklif isteyin.

Teklif isteyin

www.entegreci.com | **destek@entegreci.com** | **0850 305 90 34**

Entegreci is an online electronic components store based in Türkiye. Search by manufacturer part number to see stock, prices and datasheets for integrated circuits, microcontrollers, transistors, passive components and connectors, or request a quote for parts that are not listed.

Bu sayfa Entegreci tarafından eklenmiştir. Belgenin önceki sayfaları asıl yayıncısına aittir ve içeriği değiştirilmemiştir; en güncel sürüm için belgenin yayıncısına başvurun.