

Is Now Part of



ON Semiconductor®

To learn more about ON Semiconductor, please visit our website at
www.onsemi.com

Please note: As part of the Fairchild Semiconductor integration, some of the Fairchild orderable part numbers will need to change in order to meet ON Semiconductor's system requirements. Since the ON Semiconductor product management systems do not have the ability to manage part nomenclature that utilizes an underscore (_), the underscore (_) in the Fairchild part numbers will be changed to a dash (-). This document may contain device numbers with an underscore (_). Please check the ON Semiconductor website to verify the updated device numbers. The most current and up-to-date ordering information can be found at www.onsemi.com. Please email any questions regarding the system integration to Fairchild_questions@onsemi.com.

ON Semiconductor and the ON Semiconductor logo are trademarks of Semiconductor Components Industries, LLC dba ON Semiconductor or its subsidiaries in the United States and/or other countries. ON Semiconductor owns the rights to a number of patents, trademarks, copyrights, trade secrets, and other intellectual property. A listing of ON Semiconductor's product/patent coverage may be accessed at www.onsemi.com/site/pdf/Patent-Marking.pdf. ON Semiconductor reserves the right to make changes without further notice to any products herein. ON Semiconductor makes no warranty, representation or guarantee regarding the suitability of its products for any particular purpose, nor does ON Semiconductor assume any liability arising out of the application or use of any product or circuit, and specifically disclaims any and all liability, including without limitation special, consequential or incidental damages. Buyer is responsible for its products and applications using ON Semiconductor products, including compliance with all laws, regulations and safety requirements or standards, regardless of any support or applications information provided by ON Semiconductor. "Typical" parameters which may be provided in ON Semiconductor data sheets and/or specifications can and do vary in different applications and actual performance may vary over time. All operating parameters, including "Typicals" must be validated for each customer application by customer's technical experts. ON Semiconductor does not convey any license under its patent rights nor the rights of others. ON Semiconductor products are not designed, intended, or authorized for use as a critical component in life support systems or any FDA Class 3 medical devices or medical devices with a same or similar classification in a foreign jurisdiction or any devices intended for implantation in the human body. Should Buyer purchase or use ON Semiconductor products for any such unintended or unauthorized application, Buyer shall indemnify and hold ON Semiconductor and its officers, employees, subsidiaries, affiliates, and distributors harmless against all claims, costs, damages, and expenses, and reasonable attorney fees arising out of, directly or indirectly, any claim of personal injury or death associated with such unintended or unauthorized use, even if such claim alleges that ON Semiconductor was negligent regarding the design or manufacture of the part. ON Semiconductor is an Equal Opportunity/Affirmative Action Employer. This literature is subject to all applicable copyright laws and is not for resale in any manner.

FAN2558/FAN2559

180mA Low Voltage CMOS LDO

Features

- Fixed 1.0V, 1.2V, 1.3V, 1.5V, 1.8V, 2.5V, 3.3V, 3.5V, 3.6V, 3.8V and Adjustable Output
- Power Good Indicator with Open Drain Output
- 180mA Output Current
- 100μA Ground Current
- C_{bypass} for Low Noise Operation
- Fast Enable for CDMA Applications
- High Ripple Rejection
- Current Limit
- Thermal Shutdown
- Excellent Line and Load Regulation
- Requires Only 1μF Output Capacitor
- Stable with 0 to 300mΩ ESR
- TTL-level Compatible Enable Input
- Active Output Discharge

Applications

- Processor Power-up sequencing
- PDAs, Cell Phones
- Portable Electronic Equipment
- PCMCIA Vcc and Vpp regulation/switching

General Description

The FAN2558/9 low voltage CMOS LDOs feature fixed or adjustable output voltage, 180mA load current, delayed power good output (open drain) and 1% output accuracy with excellent line and load regulation. An external bypass capacitor provides ultra-low noise operation.

The FAN2558/9 low voltage LDOs incorporate both thermal shutdown and short circuit protection. Output is stable with a 1μF, low ESR capacitor. The FAN2558/9 family is available in 5-Lead SOT-23, 6-Lead SC70-6, and 2x2mm MLP-6 packages.

FAN2558: Fixed Output LDO with Power Good output

FAN2558ADJ: Adjustable Output LDO with Power Good output

FAN2559: Fixed Output LDO with Power Good output, Low Noise

Available standard output voltages are 1.0, 1.2V, 1.3V, 1.5V, 1.8V, 2.5V, 3.3V, 3.5V, 3.6V, and 3.8V. Custom output voltage options are also available.

Typical Application

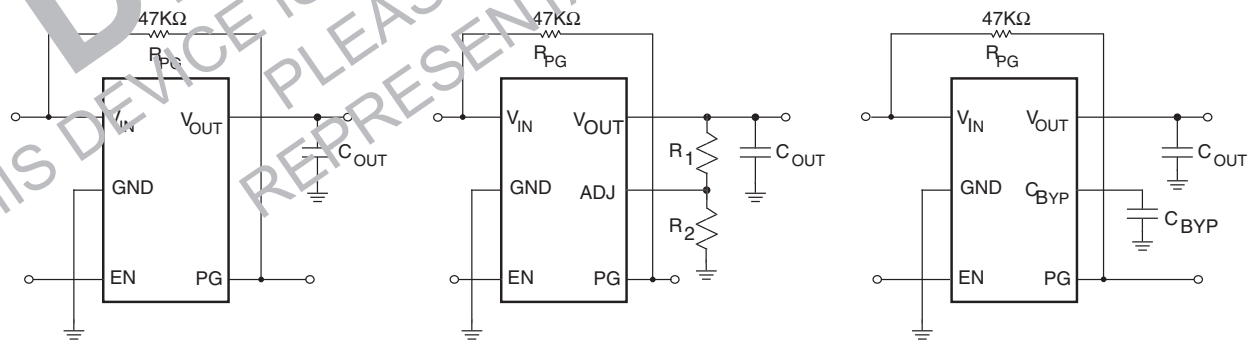

FAN2558 FAN2558ADJ FAN2559

DISCONTINUED
THIS DEVICE IS NOT RECOMMENDED FOR NEW DESIGN
PLEASE CONTACT YOUR onsemi
REPRESENTATIVE FOR INFORMATION

Pin Assignments

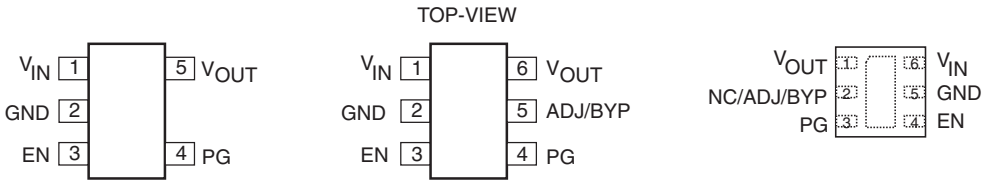

FAN2558
5-Lead SOT-23 PACKAGE

FAN2558ADJ/FAN2559
6-Lead SOT-23 PACKAGE

FAN2558/FAN2558ADJ/FAN2559
2x2mm MLP-6 PACKAGE

Pin no.	Pin Name					
	FAN2558		FAN2558ADJ		FAN2559	
	5SOT-23	2x2mm MLP-6	6SOT-23	2x2mm MLP-6	6SOT-23	2x2mm MLP-6
1	V_{IN}	V_{OUT}	V_{IN}	V_{OUT}	V_{IN}	V_{OUT}
2	GND.	NC	GND.		GND.	BYP
3	EN	PG	EN	PG	EN	PG
4	PG	EN	PG	EN	PG	EN
5	V_{OUT}	GND	ADJ	GND	BYP	GND
6		V_{IN}	V_{OUT}	V_{IN}	V_{OUT}	V_{IN}

Pin Descriptions

Symbol	Pin Function Description
V_{IN}	Power Supply Input
V_{OUT}	Regulated Voltage Output
GND	Ground Connection
PG	Power Good Output, Open Drain
ADJ	Ratio of potential divider from V_{out} to ADJ determines output voltage
BYP	Reference Noise Bypass
EN	Chip Enable Input. The regulator is fully enabled when TTL “H” is applied to this input. The regulator enters into shutdown mode when TTL “L” is applied to this input.

DISCONTINUED
THIS DEVICE IS NOT RECOMMENDED FOR NEW DESIGN
PLEASE CONTACT YOUR onsemi
REPRESENTATIVE FOR INFORMATION

Absolute Maximum Ratings

Parameter		Min.	Max.	Units
V_{IN} to GND			6	V
Voltage on any other pin to GND		-0.3	V_{IN} + 0.3	V
Junction Temperature (T_J)		-55	150	°C
Storage Temperature		-65	150	°C
Lead Soldering Temperature, 10 seconds			300	°C
Power Dissipation (P_D)			Internally ited	W
Electrostatic Discharge (ESD) Protection (Note1)	HBM	4		kV
	CDM			

Recommended Operating Conditions

Parameter	Min.	Typ.	Max.	Units
Supply Voltage Range, V_{IN} for V_{OUT} < 2.0V			5.5	V
Supply Voltage Range, V_{IN} for $V_{OUT} \geq$ 2.0V	V_{OUT} + $V_{DROPOUT}$		5.5	V
Load Current			180	mA
Enable Input Voltage V_{EN}	0		V_{IN}	V
Power Good Output Voltage Range V_{PG}	0		V_{IN}	V
Junction Temperature	-40		125	°C
Thermal Resistance-Junction to Ambient, SOT-23 (Note 2)			235	°C/W
Thermal Resistance-Junction to Case, 2mm x 2mm 6-lead MLP			75	°C/W

Notes:

1. Using Mil Std. 883E, method 3015.7 (Human Body Model) and EIA/JESD22C101-A (Charge Device Model)
2. Junction to ambient thermal resistance, θ_{JC}, is a strong function of PCB material, board thickness, thickness and number of copper planes, number of via used, diameter of via used, available copper surface, and attached heat sink characteristics.

DISCONTINUED
THIS DEVICE IS NOT RECOMMENDED FOR NEW DESIGN
PLEASE CONTACT YOUR onsemi
REPRESENTATIVE FOR INFORMATION

Electrical Characteristics

V_{IN} = V_{IN} min (note 5) to 5.5V, V_{EN} = V_{IN}, I_{LOAD} = 100µA, T_A = -40°C to +85°C, unless otherwise noted. Typical values are at 25°C.

Symbol	Parameter	Conditions	Min.	Typ.	Max.	Units
V_{OUT}	Output Voltage Accuracy (Note 3)	I_{LOAD} = 100µA	-2	1	2	%
$V_{OUT(ADJ)}$	Output Voltage Range (Adjustable)	I_{LOAD} = 100µA	1		V_{IN}	V
ΔV_{OUT_LNR}	Line Regulation	V_{IN} min < V_{IN} < 5.5V	-0.3		0.3	%/V
ΔV_{OUT_LDR}	Load Regulation (Note 4)	I_{LOAD} = 0.1mA to 150mA		2.5	4	%
I_{SD}	Supply Current in Shutdown Mode	V_{EN} < 0.4V PG = No Connection		0.1		µA
I_{GND}	Ground Pin Current (Note 4)	I_{LOAD} = 0mA, V_{IN} = 5.5V		90	150	µA
		I_{LOAD} = 150mA, V_{IN} = 5.5V		120	150	
I_{LIM}	Current Limit	V_{OUT} = 0V	260	350	500	mA
T_{SD}	Thermal Shutdown Temperature			150		°C
	Thermal Shutdown Hysteresis			10		°C
V_{ENL}	Enable Input Low	V_{IN} = 5.5V, Shutdown			0.4	V
V_{ENH}	Enable Input High	V_{IN} = 5.5V, Enabled	1.6			V
I_E	Enable Input Current	V_{ENL} = 0.4V, V_{IN} = 5.5V		0.01		µA
		V_{ENH} ≥ 1.6V, V_{IN} = 5.5V		0.01		
V_{PG}	Low Threshold	% of V_{OUT} PG ON	89			%
	High Threshold	% of V_{OUT} PG OFF			97	%
V_{PGL}	PG Output Low Voltage	I_{PG_SINK} = 100µA, Fault Condition		0.02	0.1	V
I_{PG}	PG Leakage Current	PG off, V_{PG} =5.5V		0.01		µA
T_{EN}	Enable Response Time	C_{OUT} = 1µF C_{BYPASS} = 10nF		30	300	µS
T_{ON}	Power ON" Delay Time	C_{OUT} = 1µF C_{BYPASS} = 10nF V_{ENL} ≥ 1.6V, V_{IN} = 0V to V_{OUT} + 1V		300	500	µS
D_{PG}	PG Delay time		1		5	mS
$V_{DROP-OUT}$	Dropout Voltage (For Adjustable Output Version)	V_{OUT} > 2.7V and I_{LOAD} = 180mA		400		mV
V_{FB_ADJ}	Feedback Voltage (For Adjustable Output Version)			0.59		V

Note:

3. Guaranteed ±1% output voltage accuracy parts are available on customer request.
4. Measured at constant junction temperature using low duty cycle pulse testing.
5. V_{IN} min = 2.7V or (V_{OUT} + 1V), whichever is greater.

DISCONTINUED
THIS DEVICE IS NOT RECOMMENDED FOR NEW DESIGN
PLEASE CONTACT YOUR onsemi
REPRESENTATIVE FOR INFORMATION

DC Electrical Characteristics (Continued)

V_{IN} = V_{IN} min (note 5) to 5.5V, V_{EN} = V_{IN}, I_{LOAD} = 100µA, T_A = -40°C to +85°C, unless otherwise noted. Typical values are at 25°C.

Symbol	Parameter	Conditions	Min.	Typ.	Max.	Units
PSRR	Power Supply Rejection Ratio	DC to 100kHz C_{OUT} =1µF C_{BYPASS}= 10nF I_{LOAD} = 0 to 150mA $V_{OUT} \leq$ 1.8V		50		dB
e_N	Output Noise	BW: 300Hz to 50kHz C_{OUT} =1µF C_{BYPASS}= 10nF I_{LOAD} = 0 to 150mA		30		μV_{RMS}

DISCONTINUED
THIS DEVICE IS NOT RECOMMENDED FOR NEW DESIGN
PLEASE CONTACT YOUR onsemi
REPRESENTATIVE FOR INFORMATION

Functional Description

Utilizing BiCMOS technology, the FAN2525/FAN2559 product family is optimized for use in compact battery powered systems. These LDOs offer a unique combination of high ripple rejection, low noise, low power consumption, high tolerance for a variety of output capacitors, and less than 1μA "OFF" current. In the circuit, a differential current sense amplifier controls a series-pass P-Channel MOSFET to achieve high ripple rejection. A separate error amplifier compares the load voltage at the output with an onboard trimmed low voltage bandgap reference for output regulation.

Thermal shutdown and current limit circuits protect the device under extreme conditions. When the device temperature reaches 150°C, the output is disabled. When the device cools down by 10°C, it is re-enabled. The user can shut down the device using the Enable control pin at any time. The current limit circuit is trimmed, which leads to consistent power on /enable delays, and provides safe short circuit current densities even in narrow traces of the PCB.

A carefully optimized control loop accommodates a wide range of ESR values in the output bypass capacitor, allowing the user to optimize space, cost, and performance requirements.

An Enable pin shuts down the regulator output to conserve power, reducing supply current to less than 1µA.

The fixed-voltage FAN2559 has a noise bypass pin. Power Good is available as a diagnostic function to indicate that the output voltage has reduced within 5% of the nominal value.

The six pin adjustable-voltage version utilizes pin 5 to connect to an external voltage divider which feeds back to the regulator error amplifier, thus setting the output voltage to the desired value.

Applications Information

External Capacitors - Selection

The FAN2558/FAN2559 gives the user the flexibility to utilize a wide variety of capacitors compared to other LDOs. An innovative design approach offers significantly reduced sensitivity to ESR, which degrades regulator loop stability in older designs. While the improvements featured in the FAN2558/FAN2559 family greatly simplify the design task, capacitor quality still must be considered if the designer is to achieve optimal circuit performance. In general, ceramic capacitors offer superior ESR performance, and a smaller case size than tantalum capacitors.

Input Capacitor

An input capacitor of 2.2μF (nominal value) or greater, connected between the Input pin and Ground, placed in close proximity to the device, will improve transient response and ripple rejection. Higher values will further improve ripple rejection and transient response. An input capacitor is recommended when the input source (either a battery or a regulated AC voltage, is located far from the device. Any good quality ceramic, tantalum or metal film capacitor will give acceptable performance; however, in extreme cases capacitor surge current ratings may have to be considered.

Output Capacitor

An output capacitor is required to maintain regulator loop stability. Stable operation will be achieved with a wide variety of capacitors with ESR values ranging from 0mΩ up to 400mΩ. Multilayer ceramic, tantalum or aluminum electrolytic capacitors may be used. A nominal value of at least 1μF is recommended. Note that the choice of output capacitor affects load transient response, ripple rejection, and it has a slight effect on noise performance as well.

An internal resistor of approximately 100Ω is connected between V_{OUT} and GND in shutdown mode, to discharge the output capacitor at a faster rate.

Bypass Capacitor (FAN2559 Only)

In the fixed-voltage configuration, connecting a capacitor between the bypass pin and ground can significantly reduce output noise. Values ranging from 0pF to 47nF can be used, depending on the sensitivity to output noise in the application.

At the high-impedance Bypass pin, care must be taken in the PCB layout to minimize noise pickup, and capacitors must be selected to minimize current loading (leakage). Noise pickup from external sources can be considerable. Leakage currents into the Bypass pin will directly affect regulator accuracy and should be kept as low as possible; thus, high-quality ceramic and film types are recommended for their low leakage characteristics. Cost-sensitive applications not concerned with noise can omit this capacitor.

DISCONTINUED
THIS DEVICE IS NOT RECOMMENDED FOR NEW DESIGN
PLEASE CONTACT YOUR ON Semi REPRESENTATIVE FOR INFORMATION

Control Functions

Enable Pin

Connecting 2V or greater to the Enable pin will enable the output, while 0.4V or less will disable it while reducing the quiescent current consumption to less than 1μA. If this shutdown function is not needed, the pin can simply be connected permanently to the V_{IN} pin. Allowing this pin to float will cause erratic operation.

Error Flag (Power Good)

Fault conditions such as input voltage dropout (low V_{IN}), overheating, or overloading (excessive output current), will set an error flag. The PG pin which is an open-drain output, will go LOW when V_{OUT} is less than 95% or the specified output voltage. When the voltage at V_{OUT} is greater than 95% of the specified output voltage, the PG pin is HIGH. A logic pull-up resistor of 47KΩ is recommended at this output. The pin can be left disconnected if unused.

Thermal Protection

The FAN2558/FAN2559 is designed to supply high peak output currents for brief periods, however sustained excessive output load at high input - output voltage differences will increase the device's temperature and exceed maximum ratings due to power dissipation. During output overload conditions, when the die temperature exceeds the shutdown limit temperature of 150°C, an on-chip thermal protection will disable the output until the temperature drops approximately 10°C below the limit at which point the output is re-enabled. During a thermal shutdown, the PG pin may assert the power-down function at the Enable pin, reducing power consumption to a minimum.

Thermal Characteristics

The FAN2558/FAN2559 is designed to supply 180mA at the specified output voltage with an operating die (junction) temperature of up to 125°C. Once the power dissipation and thermal resistance is known, the maximum junction temperature of the device can be calculated. While the power dissipation is calculated from known electrical parameters, the actual thermal resistance depends on the thermal characteristics of the SOT23-5 surface-mount package and the surrounding PC board copper to which it is mounted.

The power dissipation is equal to the product of the input-to-output voltage differential and the output current plus the ground current multiplied by the input voltage, or:

$$P_D = (V_{IN} - V_{OUT}) \times I_{OUT} + V_{IN} \times I_{GND}$$

The ground pin current I_{GND} can be found in the charts provided in the Electrical Characteristics section.

The relationship describing the thermal behavior of the package is:

$$P_{D(max)} = \left\{ \frac{T_{J(max)} - T_A}{\theta_{JA}} \right\}$$

where $T_{J(max)}$ is the maximum allowable junction temperature of the die, which is 125°C, and T_A is the ambient operating temperature. θ_{JA} is dependent on the surrounding PC board layout and can be empirically obtained. While the θ_{JC} (junction-to-case) of the SOT23-5 package is specified at 130°C /W, the θ_{JA} of the minimum PWB footprint will be at least 235°C /W. This can be improved by providing a heat sink of surrounding copper ground on the PWB. Depending on the size of the copper area, the resulting θ_{JA} can range from approximately 180°C /W for one square inch to nearly 130°C /W for 4 square inches. The addition of backside copper with through-holes, stiffeners, and other enhancements can also aid in reducing thermal resistance. The heat contributed by the dissipation of other devices located nearby must be included in the design considerations. Once the limiting parameters in these two relationships have been determined, the design can be modified to ensure that the device remains within the specified operating conditions. If overload conditions are not considered, it is possible for the device to enter a thermal cycling loop, in which the circuit enters a shutdown condition, cools, re-enables, and then again overheats and shuts down repeatedly due to an unmanaged fault condition.

Adjustable Version

The FAN2558ADJ includes an input pin ADJ which allows the user to select an output voltage ranging from 1V to near V_{IN}, using an external resistor divider. The voltage V_{ADJ} presented to the ADJ pin is fed to the onboard error amplifier which adjusts the output voltage until V_{ADJ} is equal to the onboard bandgap reference voltage of 1.00V(typ). The equation is:

$$V_{OUT} = 0.59V \times \left[1 + \frac{R_1}{R_2} \right]$$

Since the bandgap reference voltage is trimmed, 1% initial accuracy can be achieved. The total value of the resistor chain should not exceed 250KOhm total to keep the error amplifier biased during no-load conditions. Programming output voltages very near V_{IN} need to allow for the magnitude and variation of the dropout voltage V_{DO} over load, supply, and temperature variations. Note that the low-leakage FET input to the CMOS error amplifier induces no bias current error to the calculation.

DISCONTINUED
THIS DEVICE IS NOT RECOMMENDED FOR NEW DESIGN
PLEASE CONTACT YOU ON semi REPRESENTATIVE FOR INFORMATION

General PCB Layout Considerations

For optimum device performance, careful circuit layout and grounding techniques must be used. Establishing a small local ground, to which the GND pin, and the output and bypass capacitors are connected, is recommended. The input capacitor should be grounded to the main ground plane. The quiet local ground is then routed back to the main ground plane using feed through via. In general, the high-frequency compensation components (input, bypass, and output capacitors) should be located as close to the device as possible. Close proximity of the output capacitor is especially important to achieve optimum performance, especially during high load conditions. A large copper area in the local ground serves as heat sink (as discussed above) when high power dissipation significantly increases device temperature. Component-side copper provides significantly better thermal performance. Added feed through connecting the device side ground plane to the back plane further reduces thermal resistance.

DISCONTINUED
THIS DEVICE IS NOT RECOMMENDED FOR NEW DESIGN
PLEASE CONTACT YOUR onsemi
REPRESENTATIVE FOR INFORMATION

Block Diagram (Note 6)

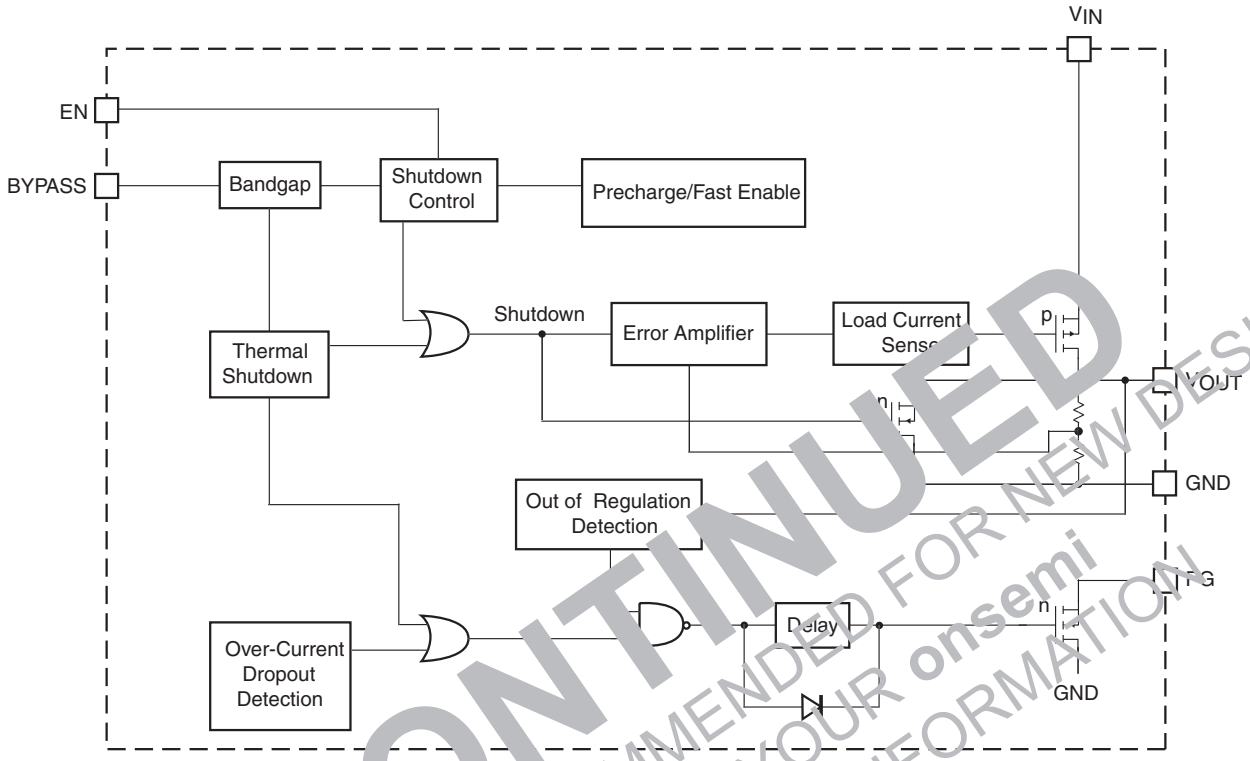

Note:

6. Fixed output voltage version. BYPASS pin is available for FAN2559 only.

DISCONTINUED
THIS DEVICE IS NOT RECOMMENDED FOR NEW DESIGN
PLEASE CONTACT YOUR onsemi
REPRESENTATIVE FOR INFORMATION

Typical Performance Characteristics

Unless otherwise specified, $C_{IN} = C_{OUT} = 1\mu F$, $R_{PG} = 47k\Omega$, $T_A = 25°C$, $EN = V_{IN}$

Output Voltage vs. Temperature

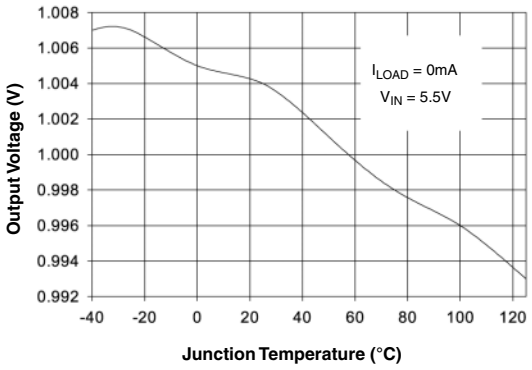

Output Voltage vs. Temperature

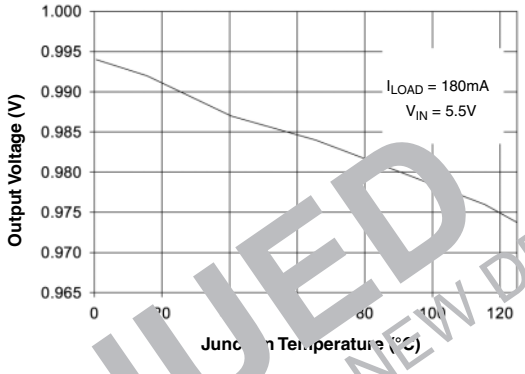

Ground Current vs. Temperature

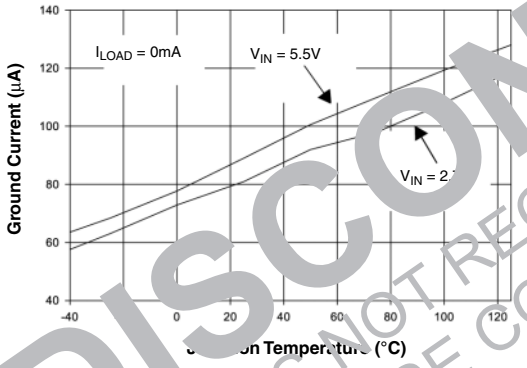

Ground Current vs. Temperature

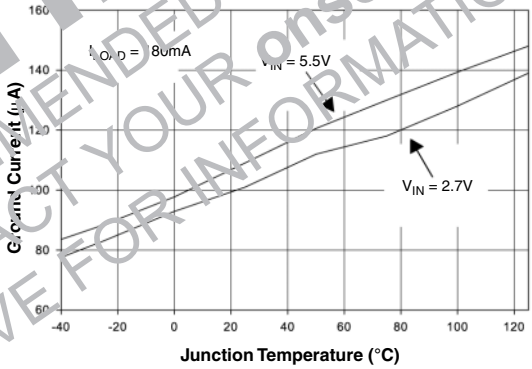

Enable Response Time vs. Temperature

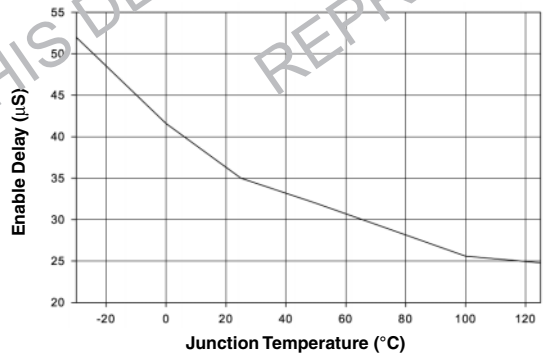

Power On Response Time vs. Temperature

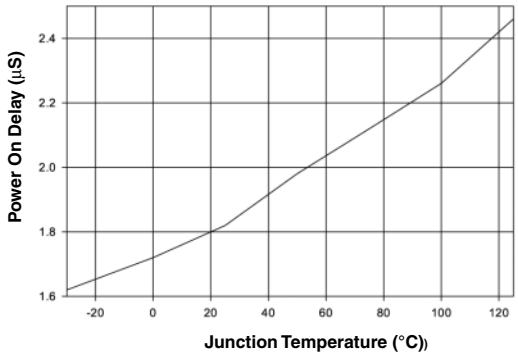

DISCONTINUED
THIS DEVICE IS NOT RECOMMENDED FOR NEW DESIGN
PLEASE CONTACT YOUR onsemi
REPRESENTATIVE FOR INFORMATION

Typical Performance Characteristics (Continued)

Unless otherwise specified, $C_{IN} = C_{OUT} = 1\mu F$, $R_{PG} = 47k\Omega$, $T_A = 25°C$, EN = V_{IN}

Power Good Delay vs. Input Voltage

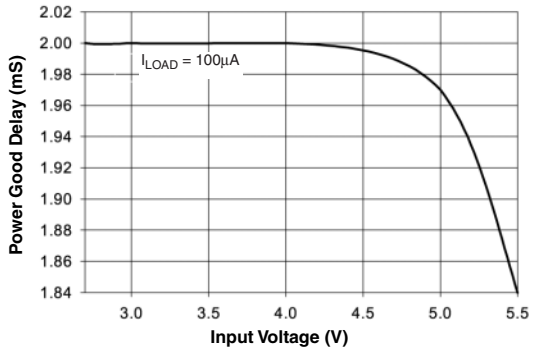

Output Voltage vs. Input Voltage

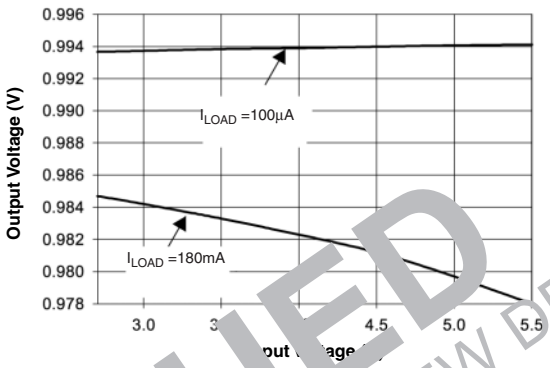

Output Voltage vs. Load Current

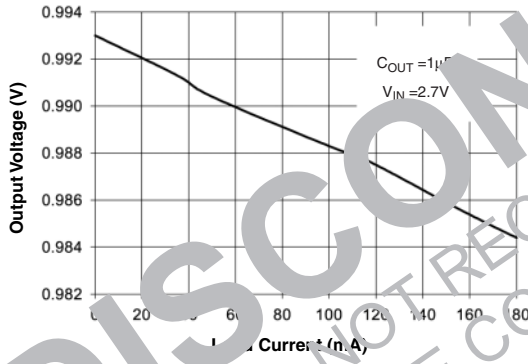

Output Voltage vs. Enable Voltage

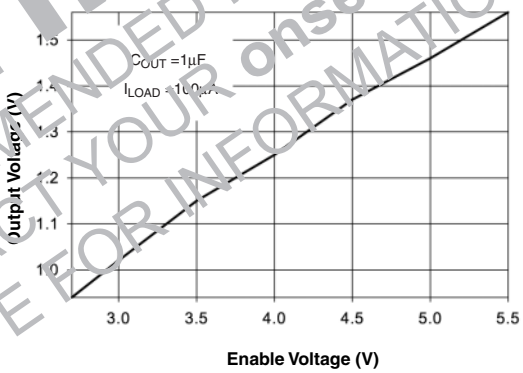

Ripple Rejection vs. Frequency

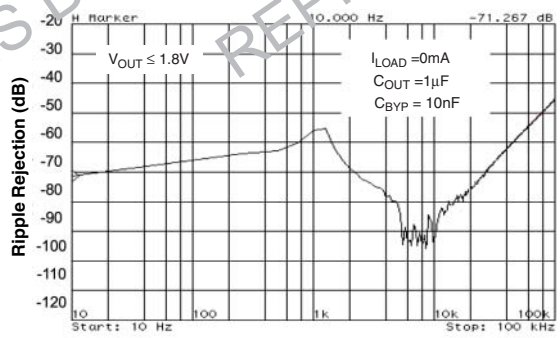

Ripple Rejection vs. Frequency

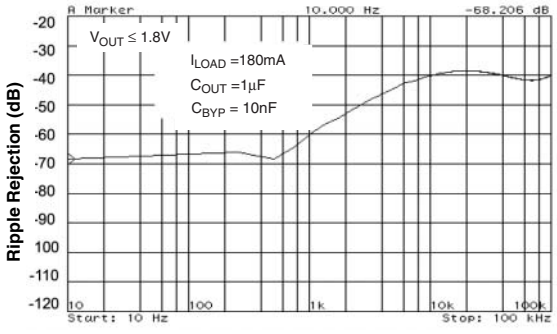

DISCONTINUED
THIS DEVICE IS NOT RECOMMENDED FOR NEW DESIGN
PLEASE CONTACT YOUR onsemi
REPRESENTATIVE FOR INFORMATION

Typical Performance Characteristics (Continued)

Unless otherwise specified, $C_{IN} = C_{OUT} = 1\mu F$, $R_{PG} = 47k\Omega$, $T_A = 25°C$, EN = V_{IN}

Output Spectral Noise Density

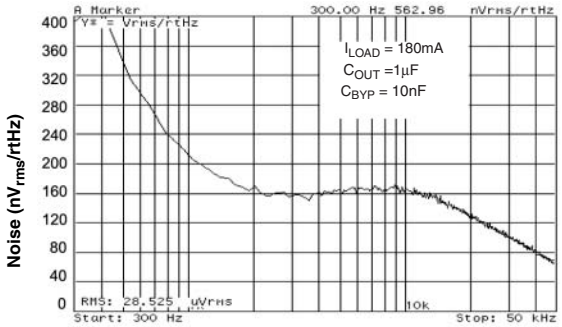

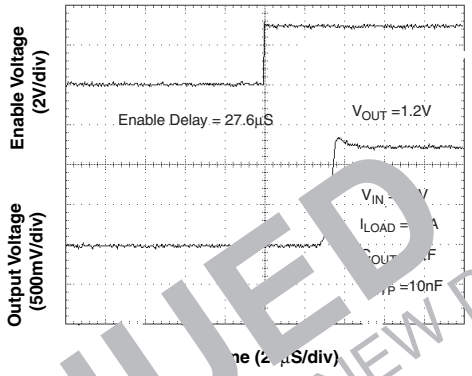

Load Transient Response

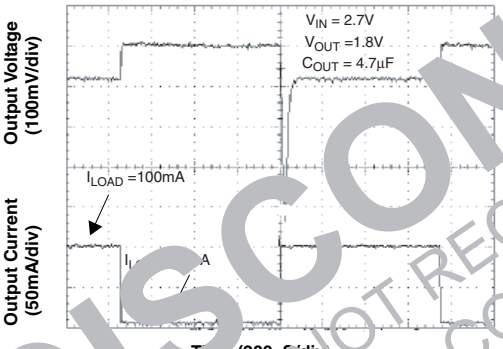

Power Good Delay

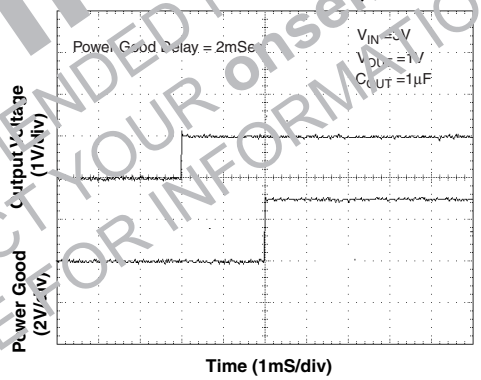

Power Good in Fail Condition

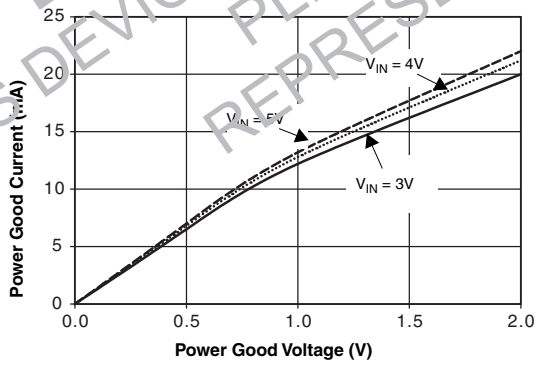

DISCONTINUED
THIS DEVICE IS NOT RECOMMENDED FOR NEW DESIGN
PLEASE CONTACT YOUR onsemi
REPRESENTATIVE FOR INFORMATION

Mechanical Dimensions

2x2mm 6-Lead MLP

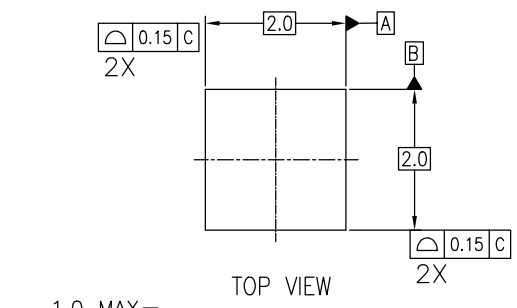

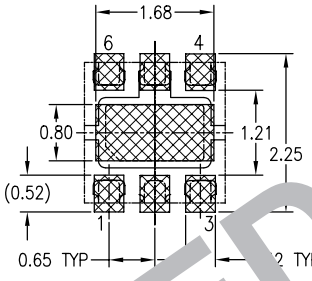

RECOMMENDED LAND PATTERN

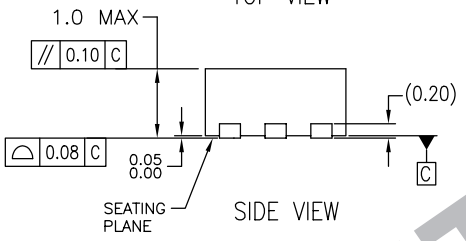

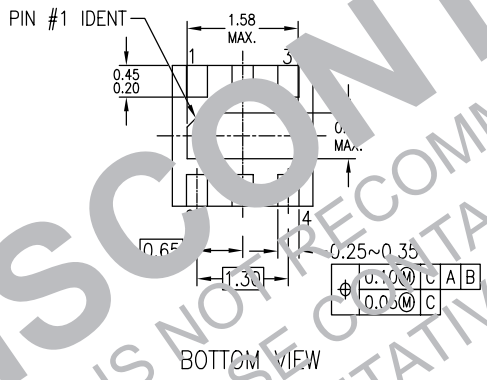

DISCONTINUED
THIS DEVICE IS NOT RECOMMENDED FOR NEW DESIGN
PLEASE CONTACT YOUR onsemi
REPRESENTATIVE FOR INFORMATION

Mechanical Dimensions

6-Lead SOT-23 Package

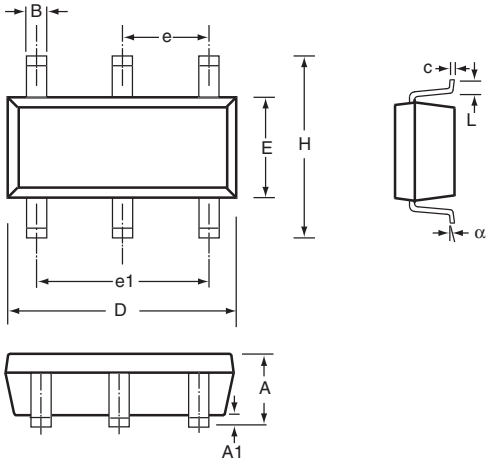

5-Lead SOT-23 Package

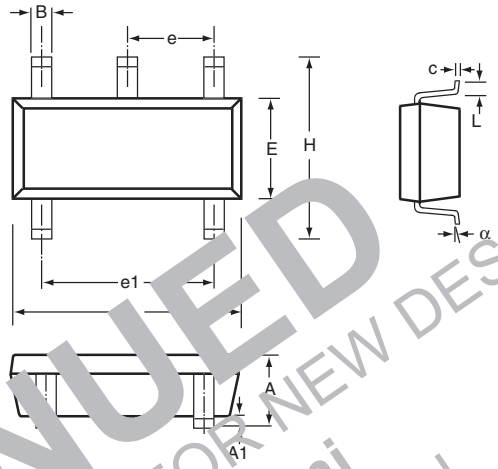

Symbol	Inches		Millimeters		Notes
	Min	Max	Min	Max	
A	.035	.057	0	1.45	
A1	.000	.006	0	0.15	
B	.008	.020	0.20	0.50	
c	.003	.008	0.08	0.25	
D	.110	.122	2.70	3.10	
E	.059	.071	1.50	1.80	
e	.037 BSC		.95 BSC		
e1	.075 BSC		1.90 BSC		
H	.087	.126	2.20	3.20	
L	.004	.024	.10	.60	
α	0°	10°	0°	10°	

Notes:

7. Package outline exclusive of mold flash & metal burr.
8. Packageoutline exclusive of solder plating.
9. EIAJ Ref Number SC_74A

DISCONTINUED
THIS DEVICE IS NOT RECOMMENDED FOR NEW DESIGN
PLEASE CONTACT YOUR onsemi
REPRESENTATIVE FOR INFORMATION

Ordering Information

T_A= -40°C to 85°C

Part Number	Output Voltage	Package Marking	Package	Order Code
FAN2558	1.0V	58T	5-Lead SOT-23	FAN2558S10X
	1.2V	58U		FAN2558S12X
	1.3V	58X		FAN2558S13X
	1.5V	58V		FAN2558S15X
	1.8V	58O		FAN2558S18X
	2.5V	58J		FAN2558S25X
	3.3V	58K		FAN2558S33X
	3.5V	58P		FAN2558S35X
	3.6V	58Q		FAN2558S36X
	3.8V	58I		FAN2558S38X
	1.0V	58T	2mm x 2mm 6-Lead MLP	FAN2558MP10X
	1.2V	58U		FAN2558MP12X
	1.3V	58X		FAN2558MP13X
	1.5V	58V		FAN2558MP15X
	1.8V	58O		FAN2558MP18X
	Adjustable	58R	5-Lead SOT-23	FAN2558SX
		58H	2mm x 2mm 6-Lead MLP	FAN2558MPX
FAN2559	1.0V	59T	6-Lead SOT-23	FAN2559S10X
	1.2V	59U		FAN2559S12X
	1.3V	59X		FAN2559S13X
	1.5V	59V		FAN2559S15X
	1.8V	59O		FAN2559S18X
	1.0V	59T	2mm x 2mm 6-Lead MLP	FAN2559MP10X
	1.2V	59U		FAN2559MP12X
	1.3V	59X		FAN2559MP13X
	1.5V	59V		FAN2559MP15X
	1.8V	59O		FAN2559MP18X

DISCONTINUED
THIS DEVICE IS NOT RECOMMENDED FOR NEW DESIGN
PLEASE CONTACT YOUR onsemi
REPRESENTATIVE FOR INFORMATION

DISCLAIMER

FAIRCHILD SEMICONDUCTOR RESERVES THE RIGHT TO MAKE CHANGES WITHOUT FURTHER NOTICE TO ANY PRODUCTS HEREIN TO IMPROVE RELIABILITY, FUNCTION OR DESIGN. FAIRCHILD DOES NOT ASSUME ANY LIABILITY ARISING OUT OF THE APPLICATION OR USE OF ANY PRODUCT OR CIRCUIT DESCRIBED HEREIN; NEITHER DOES IT CONVEY ANY LICENSE UNDER ITS PATENT RIGHTS, NOR THE RIGHTS OF OTHERS.

LIFE SUPPORT POLICY

FAIRCHILD'S PRODUCTS ARE NOT AUTHORIZED FOR USE AS CRITICAL COMPONENTS IN LIFE SUPPORT DEVICES OR SYSTEMS WITHOUT THE EXPRESS WRITTEN APPROVAL OF THE PRESIDENT OF FAIRCHILD SEMICONDUCTOR CORPORATION. As used herein:

1. Life support devices or systems are devices or systems which, (a) are intended for surgical implant into the body, or (b) support or sustain life, and (c) whose failure to perform when properly used in accordance with instructions for use provided in the labeling, can be reasonably expected to result in a significant injury of the user.
2. A critical component in any component of a life support device or system whose failure to perform can be reasonably expected to cause the failure of the life support device or system, or to affect its safety or effectiveness.

© 2004 Fairchild Semiconductor Corporation

ON Semiconductor and ON are trademarks of Semiconductor Components Industries, LLC dba ON Semiconductor or its subsidiaries in the United States and/or other countries. ON Semiconductor owns the rights to a number of patents, trademarks, copyrights, trade secrets, and other intellectual property. A listing of ON Semiconductor's product/patent coverage may be accessed at www.onsemi.com/site/pdf/Patent−Marking.pdf. ON Semiconductor reserves the right to make changes without further notice to any products herein. ON Semiconductor makes no warranty, representation or guarantee regarding the suitability of its products for any particular purpose, nor does ON Semiconductor assume any liability arising out of the application or use of any product or circuit, and specifically disclaims any and all liability, including without limitation special, consequential or incidental damages. Buyer is responsible for its products and applications using ON Semiconductor products, including compliance with all laws, regulations and safety requirements or standards, regardless of any support or applications information provided by ON Semiconductor. "Typical" parameters which may be provided in ON Semiconductor data sheets and/or specifications can and do vary in different applications and actual performance may vary over time. All operating parameters, including "Typicals" must be validated for each customer application by customer's technical experts. ON Semiconductor does not convey any license under its patent rights nor the rights of others. ON Semiconductor products are not designed, intended, or authorized for use as a critical component in life support systems or any FDA Class 3 medical devices or medical devices with a same or similar classification in a foreign jurisdiction or any devices intended for implantation in the human body. Should Buyer purchase or use ON Semiconductor products for any such unintended or unauthorized application, Buyer shall indemnify and hold ON Semiconductor and its officers, employees, subsidiaries, affiliates, and distributors harmless against all claims, costs, damages, and expenses, and reasonable attorney fees arising out of, directly or indirectly, any claim of personal injury or death associated with such unintended or unauthorized use, even if such claim alleges that ON Semiconductor was negligent regarding the design or manufacture of the part. ON Semiconductor is an Equal Opportunity/Affirmative Action Employer. This literature is subject to all applicable copyright laws and is not for resale in any manner.

PUBLICATION ORDERING INFORMATION

LITERATURE FULFILLMENT:
Literature Distribution Center for ON Semiconductor
19521 E. 32nd Pkwy, Aurora, Colorado 80011 USA
Phone: 303−675−2175 or 800−344−3860 Toll Free USA/Canada
Fax: 303−675−2176 or 800−344−3867 Toll Free USA/Canada
Email: orderlit@onsemi.com

N. American Technical Support: 800−282−9855 Toll Free USA/Canada
Europe, Middle East and Africa Technical Support:
Phone: 421 33 790 2910
Japan Customer Focus Center
Phone: 81−3−5817−1050

ON Semiconductor Website: **www.onsemi.com**

Order Literature: http://www.onsemi.com/orderlit

For additional information, please contact your local Sales Representative

ENTEGRECİ

Bu belge www.entegreci.com üzerinden sunulmaktadır.

Elektronik komponent tedarikinde Entegreci

Entegreci, Eskişehir merkezli, Türkiye geneline satış yapan bir elektronik komponent mağazasıdır. Entegreler (IC), mikrodenetleyiciler, transistörler, diyotlar, pasif elemanlar, konnektörler, modüller ve geliştirme kartları tek adetten seri üretim adetlerine kadar satılır. Ürün sayfalarında güncel stok durumunu, fiyatı ve datasheet bağlantısını bulabilirsiniz.

Parça koduyla arama

Üretici parça numarasını yazın; stok ve fiyatı hemen görün.

www.entegreci.com

Ürün kategorileri

Entegreden kapasitöre tüm elektronik komponent kategorileri.

Kategorilere göz atın

Üreticiler

Aradığınız üreticinin ürünlerini tek sayfada inceleyin.

Üreticileri görün

Toplu alım ve teklif

Listede olmayan ya da yüksek adetli parçalar için teklif isteyin.

Teklif isteyin

www.entegreci.com | **destek@entegreci.com** | **0850 305 90 34**

Entegreci is an online electronic components store based in Türkiye. Search by manufacturer part number to see stock, prices and datasheets for integrated circuits, microcontrollers, transistors, passive components and connectors, or request a quote for parts that are not listed.

Bu sayfa Entegreci tarafından eklenmiştir. Belgenin önceki sayfaları asıl yayıncısına aittir ve içeriği değiştirilmemiştir; en güncel sürüm için belgenin yayıncısına başvurun.