SINGLE P-CHANNEL ENHANCEMENT MODE FIELD EFFECT TRANSISTOR

Please click here to visit our online spice models database.

NEW PRODUCT

Features

- Low On-Resistance
  - 65mΩ @ V_{GS} = -10V
  - 115mΩ @ V_{GS} = -4.5V
- Low Gate Threshold Voltage
- Low Input Capacitance
- Fast Switching Speed
- Low Input/Output Leakage
- **Lead Free By Design/RoHS Compliant (Note 2)**
- **"Green" Device (Note 4)**
- **Qualified to AEC-Q101 Standards for High Reliability**

Mechanical Data

- Case: SOP-8L
- Case Material: Molded Plastic, "Green" Molding Compound. UL Flammability Classification Rating 94V-0
- Moisture Sensitivity: Level 1 per J-STD-020D
- Terminals Connections: See Diagram
- Terminals: Finish - Matte Tin annealed over Copper lead frame. Solderable per MIL-STD-202, Method 208
- Marking Information: See Page 4
- Ordering Information: See Page 4
- Weight: 0.072g (approximate)

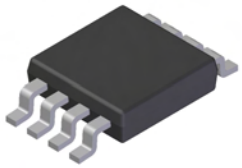

TOP VIEW

SOP-8L

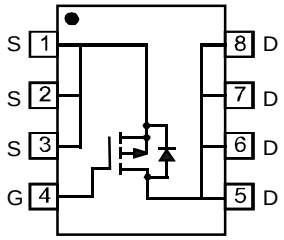

TOP VIEW
Internal Schematic

Maximum Ratings @T_A = 25°C unless otherwise specified

Characteristic			Symbol	Value	Units
Drain-Source Voltage			V_{DSS}	-30	V
Gate-Source Voltage			V_{GSS}	±20	V
Drain Current (Note 1)	Steady State	T_A = 25°C T_A = 70°C	I_D	-5.3 -4.7	A
Pulsed Drain Current (Note 3)			I_{DM}	-20	A

Thermal Characteristics

Characteristic	Symbol	Value	Unit
Total Power Dissipation (Note 1)	P_D	2.5	W
Thermal Resistance, Junction to Ambient (Note 1)	$R_{\theta JA}$	50	°C/W
Operating and Storage Temperature Range	T_J, T_{STG}	-55 to +150	°C

Notes:
1. Device mounted on 2 oz. 1" x 1" Copper pads on 2" x 2" FR-4 PCB.
2. No purposefully added lead.
3. Pulse width ≤10μS, Duty Cycle ≤1%.
4. Diodes Inc.'s "Green" policy can be found on our website at http://www.diodes.com/products/lead_free/index.php.

© Diodes Incorporated

NEW PRODUCT

Electrical Characteristics @T_A = 25°C unless otherwise specified

Characteristic	Symbol	Min	Typ	Max	Unit	Test Condition
OFF CHARACTERISTICS (Note 5)						
Drain-Source Breakdown Voltage	BV_{DSS}	-30	—	—	V	V_{GS} = 0V, I_D = -250μA
Zero Gate Voltage Drain Current	I_{DSS}	—	—	-1	μA	V_{DS} = -30V, V_{GS} = 0V
Gate-Source Leakage	I_{GSS}	—	—	±100	nA	V_{GS} = ±20V, V_{DS} = 0V
ON CHARACTERISTICS (Note 5)						
Gate Threshold Voltage	$V_{GS(th)}$	-1	—	-2.1	V	V_{DS} = V_{GS}, I_D = -250μA
Static Drain-Source On-Resistance	$R_{DS\ (ON)}$	— —	56 98	65 115	mΩ	V_{GS} = -10V, I_D = -5.3A V_{GS} = -4.5V, I_D = -4.2A
Forward Transconductance	g_{fs}	—	5.2	—	S	V_{DS} = -10V, I_D = -5.3A
Diode Forward Voltage (Note 5)	V_{SD}	-0.5	—	-1.2	V	V_{GS} = 0V, I_S = -2A
DYNAMIC CHARACTERISTICS						
Input Capacitance	C_{iss}	—	336	—	pF	V_{DS} = -25V, V_{GS} = 0V f = 1.0MHz
Output Capacitance	C_{oss}	—	70	—	pF	
Reverse Transfer Capacitance	C_{rss}	—	49	—	pF	
Gate Resistance	R_G	—	4.6	—	Ω	V_{DS} = 0V, V_{GS} = 0V f = 1.0MHz
SWITCHING CHARACTERISTICS						
Total Gate Charge	Q_G	—	4.0	—	nC	V_{DS} = -15V, V_{GS} = -4.5V, I_D = -5.0A
	Q_G	—	7.8	—	nC	V_{DS} = -15V, V_{GS} = -10V, I_D = -5.0A
Gate-Source Charge	Q_{GS}	—	1.0	—		
Gate-Drain Charge	Q_{GD}	—	2.5	—		
Turn-On Delay Time	$t_{d(on)}$	—	6.0	—	ns	V_{DS} = -15V, V_{GS} = -10V, I_D = -1A, R_G = 6.0Ω
Rise Time	t_r	—	5.0	—		
Turn-Off Delay Time	$t_{d(off)}$	—	17.6	—		
Fall Time	t_f	—	9.5	—		

Notes: 5. Short duration pulse test used to minimize self-heating effect.

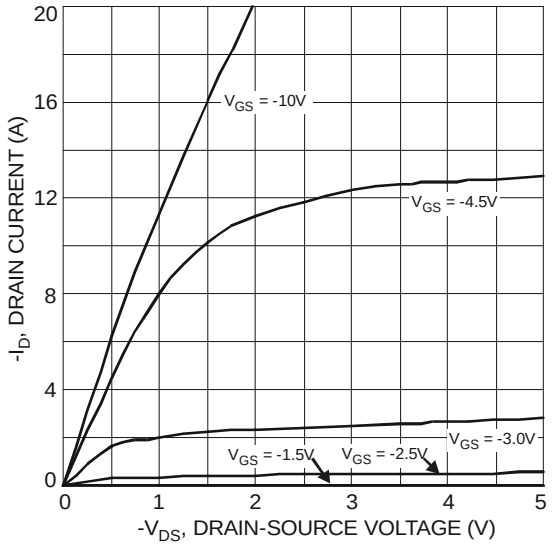

Fig. 1 Typical Output Characteristics

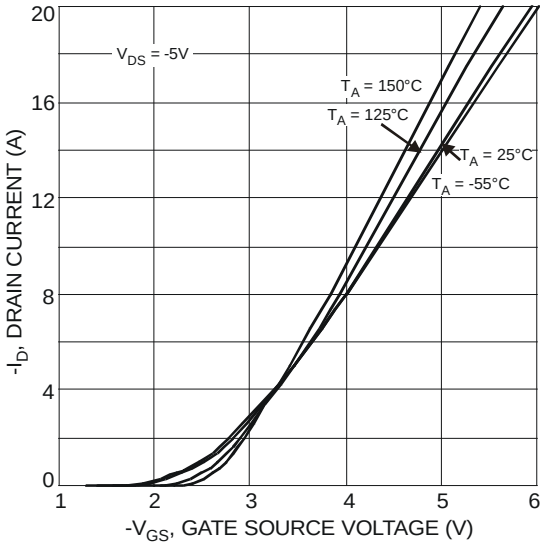

Fig. 2 Typical Transfer Characteristics

© Diodes Incorporated

NEW PRODUCT

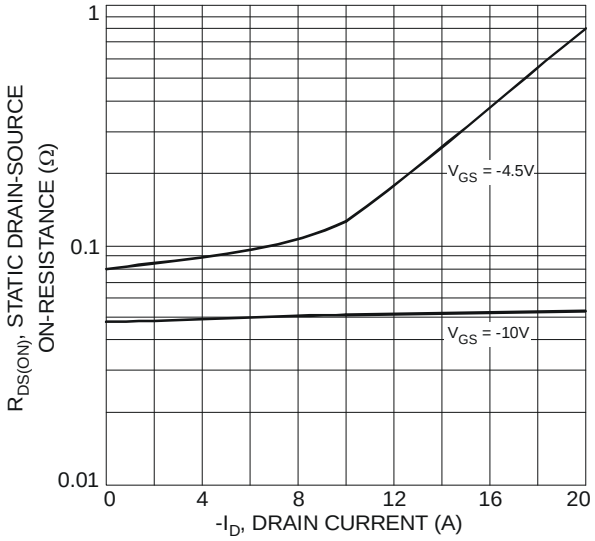

Fig. 3 Typical On-Resistance vs. Drain Current and Gate Voltage

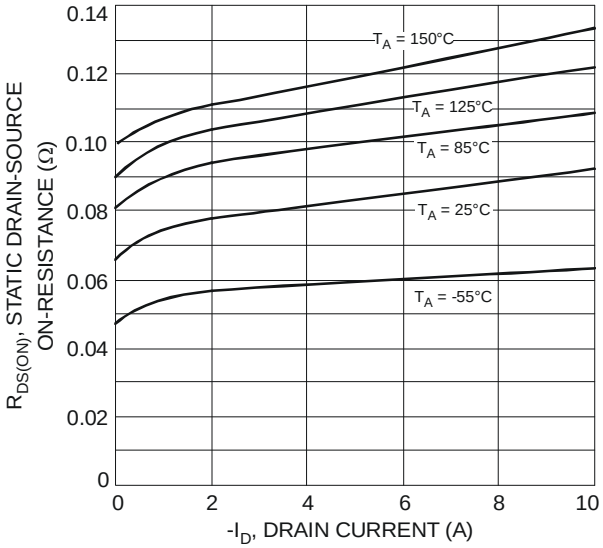

Fig. 4 Typical On-Resistance vs. Drain Current and Temperature

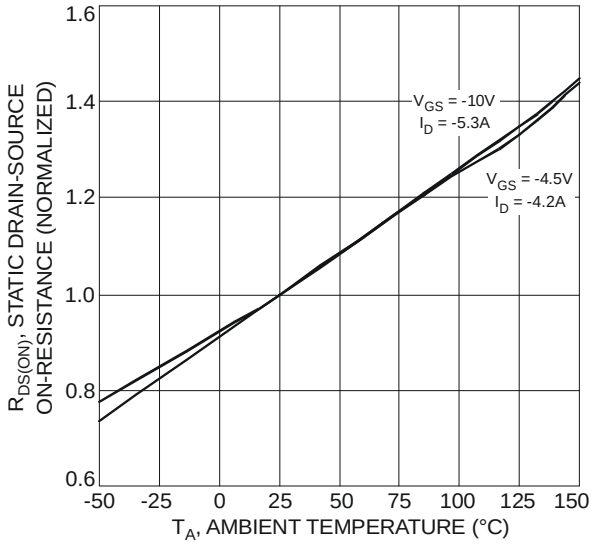

Fig. 5 On-Resistance Variation with Temperature

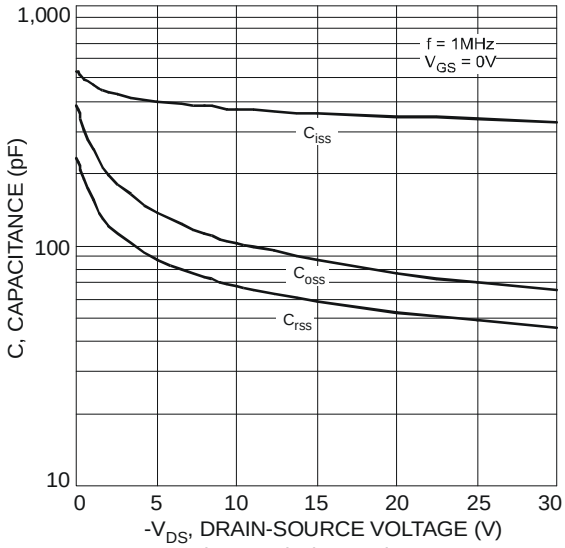

Fig. 6 Typical Capacitance

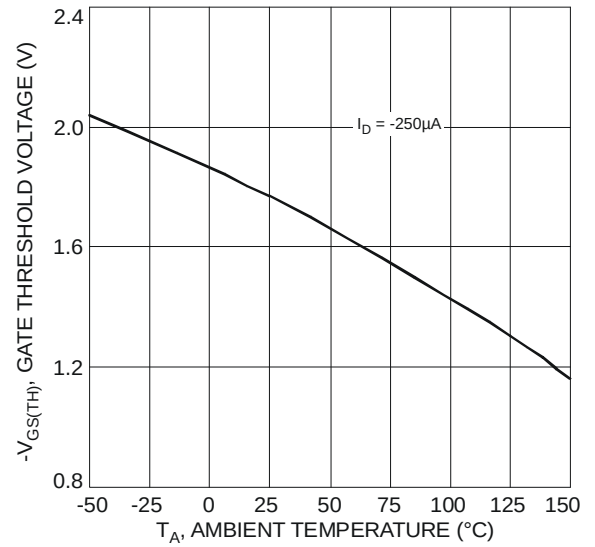

Fig. 7 Gate Threshold Variation vs. Ambient Temperature

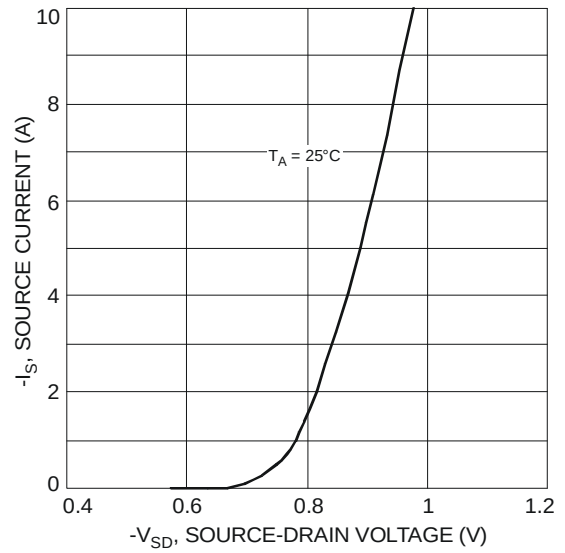

Fig. 8 Diode Forward Voltage vs. Current

© Diodes Incorporated

NEW PRODUCT

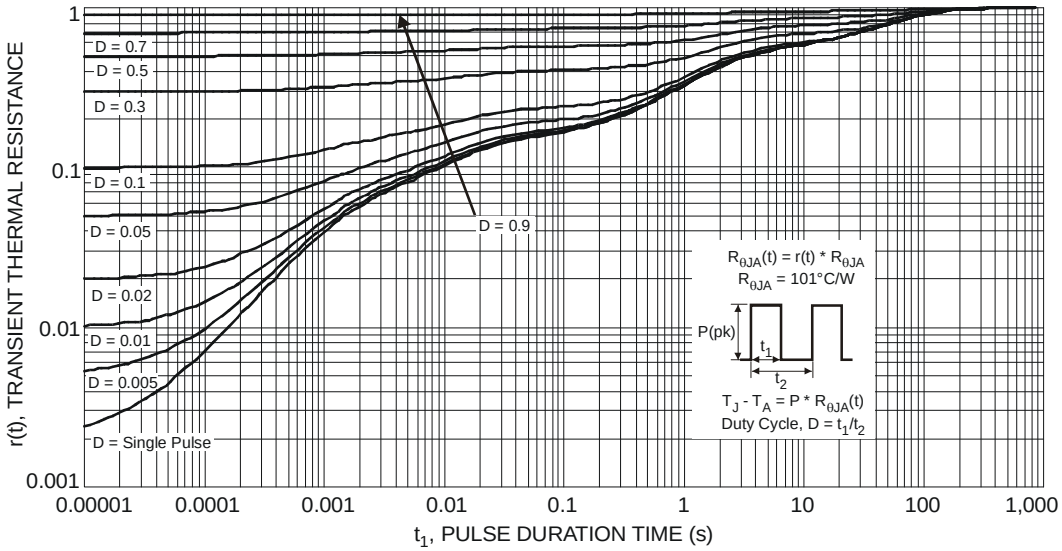

Fig. 9 Transient Thermal Response

Ordering Information (Note 6)

Part Number	Case	Packaging
DMP3098LSS-13	SOP-8L	2500/Tape & Reel

Notes: 6. For packaging details, go to our website at http://www.diodes.com/datasheets/ap02007.pdf.

Marking Information

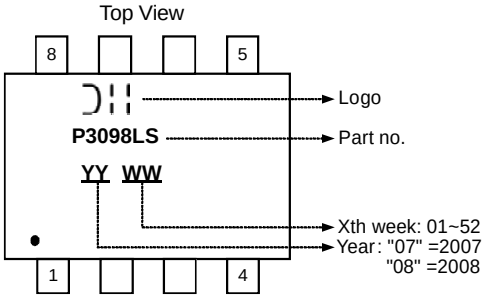

Package Outline Dimensions

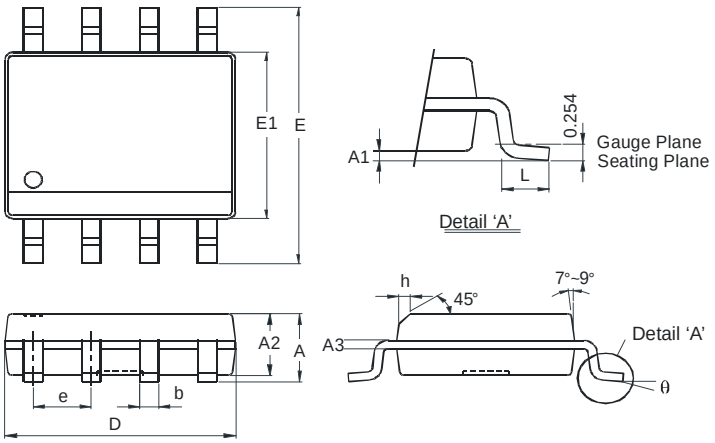

SOP-8L		
Dim	**Min**	**Max**
A	-	1.75
A1	0.08	0.25
A2	1.40	1.50
A3	0.20 Typ	
b	0.3	0.5
D	4.85	4.95
E	5.90	6.10
E1	3.80	3.90
e	1.27 Typ	
h	-	0.35
L	0.60	0.80
θ	0°	8°
All Dimensions in mm		

© Diodes Incorporated

NEW PRODUCT

Suggested Pad Layout

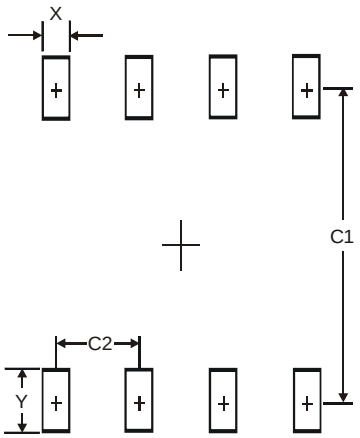

Dimensions	Value (in mm)
X	0.60
Y	1.55
C1	5.4
C2	1.27

IMPORTANT NOTICE

Diodes Incorporated and its subsidiaries reserve the right to make modifications, enhancements, improvements, corrections or other changes without further notice to any product herein. Diodes Incorporated does not assume any liability arising out of the application or use of any product described herein; neither does it convey any license under its patent rights, nor the rights of others. The user of products in such applications shall assume all risks of such use and will agree to hold Diodes Incorporated and all the companies whose products are represented on our website, harmless against all damages.

LIFE SUPPORT

Diodes Incorporated products are not authorized for use as critical components in life support devices or systems without the expressed written approval of the President of Diodes Incorporated.

© Diodes Incorporated

ENTEGRECİ

Bu belge www.entegreci.com üzerinden sunulmaktadır.

Elektronik komponent tedarikinde Entegreci

Entegreci, Eskişehir merkezli, Türkiye geneline satış yapan bir elektronik komponent mağazasıdır. Entegreler (IC), mikrodenetleyiciler, transistörler, diyotlar, pasif elemanlar, konnektörler, modüller ve geliştirme kartları tek adetten seri üretim adetlerine kadar satılır. Ürün sayfalarında güncel stok durumunu, fiyatı ve datasheet bağlantısını bulabilirsiniz.

Parça koduyla arama

Üretici parça numarasını yazın; stok ve fiyatı hemen görün.

www.entegreci.com

Ürün kategorileri

Entegreden kapasitöre tüm elektronik komponent kategorileri.

Kategorilere göz atın

Üreticiler

Aradığınız üreticinin ürünlerini tek sayfada inceleyin.

Üreticileri görün

Toplu alım ve teklif

Listede olmayan ya da yüksek adetli parçalar için teklif isteyin.

Teklif isteyin

www.entegreci.com | **destek@entegreci.com** | **0850 305 90 34**

Entegreci is an online electronic components store based in Türkiye. Search by manufacturer part number to see stock, prices and datasheets for integrated circuits, microcontrollers, transistors, passive components and connectors, or request a quote for parts that are not listed.

Bu sayfa Entegreci tarafından eklenmiştir. Belgenin önceki sayfaları asıl yayıncısına aittir ve içeriği değiştirilmemiştir; en güncel sürüm için belgenin yayıncısına başvurun.