BQ77207 Voltage and Temperature Protection for 3-Series to 7-Series Cell Li-Ion Batteries with Internal Delay Timer

1 Features

- 3-series cell to 7-series cell protection
- High-accuracy overvoltage protection
  - ± 10mV at 25°C
  - ± 20mV from 0°C to 60°C
- Overvoltage protection options from 3.55V to 5.1V
- Undervoltage protection with options from 1.0V to 3.5V
- Open-wire connection detection
- Overtemperature protection using NTC or PTC
- Random cell connection
- Functional safety-capable
- Fixed internal delay timers
- Fixed detections thresholds
- Fixed output drive type for each of COUT and DOUT
  - Active high or active low
  - Active high drive to 6V
  - Open drain with ability to be pulled up externally to VDD
- Low power consumption I_{CC} is approximately 1µA ($V_{CELL(ALL)} < V_{OV}$)
- Low leakage current per cell input < 100nA with open-wire detection disabled
- Package footprint option
  - 12-pin WSON with 0.5mm lead pitch

2 Applications

- Protection for Li-ion battery packs used in:
  - Handheld garden tools
  - Handheld power tools
  - Cordless vacuum cleaners
  - UPS battery backup
  - Light electric vehicles (eBike, eScooter, pedal assist bicycles)

3 Description

The BQ77207 family of products provides a range of voltage and temperature monitoring including overvoltage (OVP), undervoltage (UVP), open wire (OW), and overtemperature (OT) protection for Li-ion battery pack systems. Each cell is monitored independently for overvoltage, undervoltage, and open-wire conditions. With the addition of an external NTC or PTC thermistor, the device can detect overtemperature conditions.

In the BQ77207 device, an internal delay timer is initiated upon detection of an overvoltage, undervoltage, open-wire, or overtemperature condition. Upon expiration of the delay timer, the respective output is triggered into the active state (either high or low, depending on the configuration).

The overvoltage triggers the COUT pin if a fault is detected, and undervoltage triggers the DOUT pin if a fault is detected. If an overtemperature or open-wire fault is detected, then both the DOUT and COUT is triggered. For quicker production-line testing, the BQ77207 device provides a Customer Test Mode (CTM) with greatly reduced delay time.

Package Information

PART NUMBER	PACKAGE(1)	PACKAGE SIZE(2)
BQ77207	DSS (WSON, 12)	3mm × 2mm

(1) For more information, see Section 11.
(2) The package size (length × width) is a nominal value and includes pins, where applicable.

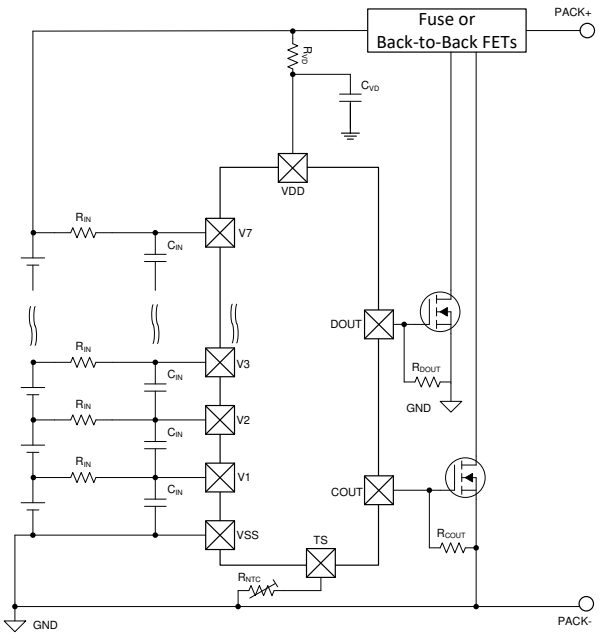

Simplified Schematic

Table of Contents

1 Features....1
2 Applications....1
3 Description....1
4 Device Comparison Table....3
5 Pin Configuration and Functions....4
6 Specifications....5
6.1 Absolute Maximum Ratings....5
6.2 ESD Ratings....5
6.3 Recommended Operating Conditions....5
6.4 Thermal Information....5
6.5 DC Characteristics....6
6.6 Timing Requirements....8
7 Detailed Description....9
7.1 Overview....9
7.2 Functional Block Diagram....9
7.3 Feature Description....9
7.4 Device Functional Modes....11
8 Application and Implementation....13
8.1 Application Information....13
8.2 Systems Example....16
8.3 Power Supply Recommendations....17
8.4 Layout....17
9 Device and Documentation Support....19
9.1 Third-Party Products Disclaimer....19
9.2 Receiving Notification of Documentation Updates....19
9.3 Support Resources....19
9.4 Trademarks....19
9.5 Electrostatic Discharge Caution....19
9.6 Glossary....19
10 Revision History....20
11 Mechanical, Packaging, and Orderable Information....20

Copyright © 2026 Texas Instruments Incorporated

4 Device Comparison Table

PART NUMBER	T_A	PACKAGE	PACKAGE DESIGNATOR	OVP (V)	OV HYSTERESIS (V)	OVP OUTPUT DELAY	UVP (V)
BQ7720700	–40°C to 110°C	12-Pin WSON	DSS	4.325	0.100	1 s	2.25
BQ7720701	–40°C to 110°C	12-Pin WSON	DSS	4.275	0.100	1 s	2.0
BQ7720702	–40°C to 110°C	12-Pin WSON	DSS	4.275	0.100	4 s	2.0
BQ7720704	–40°C to 110°C	12-Pin WSON	DSS	4.275	0.05	1 s	2.0
BQ7720705	–40°C to 110°C	12-Pin WSON	DSS	4.275	0.100	1 s	2.5
BQ7720706	–40°C to 110°C	12-Pin WSON	DSS	4.325	0.100	2 s	Disabled
BQ77207xy(1)	–40°C to 110°C	12-Pin WSON	DSS	3.55 – 5.1	0.05, 0.100	0.25 s, 0.5 s, 1 s, 2 s, 4 s	1.0 – 3.5

PART NUMBER (CONT.)	UV HYSTERESIS (V)	UVP OUTPUT DELAY	OT (°C)	OW	LATCH	OUTPUT DRIVE	TAPE AND REEL
BQ7720700	0.100	1 s	70	Enabled	Disabled	Active High 6V	BQ7720700DSSR
BQ7720701	0.100	1 s	80	Enabled	Disabled	Active High 6V	BQ7720701DSSR
BQ7720702	0.100	2 s	80	Enabled	Disabled	Active High 6V	BQ7720702DSSR
BQ7720704	0.100	1 s	83	Enabled	Disabled	COUT = Open Drain Active Pulldown, DOUT = Active High 6V	BQ7720704DSSR
BQ7720705	0.100	1 s	75	Disabled	Disabled	Active High 6V	BQ7720705DSSR
BQ7720706	N/A	N/A	70	Disabled	Disabled	Active High 6V	BQ7720706DSSR
BQ77207xy(1)	0.05, 0.100	0.25 s, 0.5 s, 1s, 2s	62, 65, 70, 75, 80, 83	Enabled, Disabled	Enabled, Disabled	Open Drain Active Pulldown, Open Drain Inactive Pulldown, Active High 6V, Active High VDD	TBD

(1) For future options, contact TI for more information.

Copyright © 2026 Texas Instruments Incorporated

5 Pin Configuration and Functions

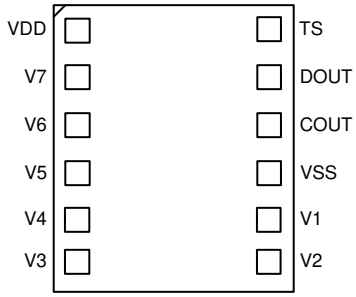

Figure 5-1. BQ77207 Pin Diagram

12-Pin Functions

NO.	NAME	TYPE(1)	DESCRIPTION
1	VDD	P	Power supply
2	V7	I	Sense input for positive voltage of the seventh cell from the bottom of the stack
3	V6	I	Sense input for positive voltage of the sixth cell from the bottom of the stack
4	V5	I	Sense input for positive voltage of the fifth cell from the bottom of the stack
5	V4	I	Sense input for positive voltage of the fourth cell from the bottom of the stack
6	V3	I	Sense input for positive voltage of the third cell from the bottom of the stack
7	V2	I	Sense input for positive voltage of the second cell from the bottom of the stack
8	V1	I	Sense input for positive voltage of the first cell from the bottom of the stack
9	VSS	P	Electrically connected to IC ground and negative terminal of the lowest cell in the stack
10	COUT	O	Output drive for overvoltage, open wire, and overtemperature. It can be left floating if not used.
11	DOUT	O	Output drive for undervoltage, open wire, and overtemperature. It can be left floating if not used.
12	TS	I	Temperature sensor input. If not used, leave it NC.

(1) I = Input, O = Output, P = Power Connection

Copyright © 2026 Texas Instruments Incorporated

6 Specifications

6.1 Absolute Maximum Ratings

over operating free-air temperature range (unless otherwise noted)(1)

		MIN	MAX	UNIT
Supply voltage range	VDD - VSS (2)	–0.3	45	V
Input voltage range	Vn - VSS where n = 1 to 7	–0.3	45	V
	TS	–0.3	1.5	V
Output voltage range	COUT - VSS, DOUT - VSS	–0.3	45	V
Functional temperature,T_{FUNC}		–40	110	°C
Storage temperature, T_{STG}		–65	150	°C

(1) Operation outside the Absolute Maximum Ratings may cause permanent device damage. Absolute Maximum Ratings do not imply functional operation of the device at these or any other conditions beyond those listed under Recommended Operating Conditions. If outside the Recommended Operating Conditions but within the Absolute Maximum Ratings, the device may not be fully functional, and this may affect device reliability, functionality, performance, and shorten the device lifetime.
(2) DC Voltage applied on this pin should be limited to a maximum of 40 V. Stresses to this pin at voltages beyond this level, up to the 45-V specified maximum level, should be limited to short transients.

6.2 ESD Ratings

			VALUE	UNIT
$V_{(ESD)}$	Electrostatic discharge	Human body model (HBM), per ANSI/ESDA/JEDEC JS-001, all pins(1)	±2000	V
		Charged device model (CDM), per ANSI/ESDA/JEDEC JS-002, all pins, all pins(2)	±500	

(1) JEDEC document JEP155 states that 500-V HBM allows safe manufacturing with a standard ESD control process.
(2) JEDEC document JEP157 states that 250-V CDM allows safe manufacturing with a standard ESD control process.

6.3 Recommended Operating Conditions

over operating free-air temperature range (unless otherwise noted)

		MIN	NOM	MAX	UNIT
V_{DD}	Supply voltage (1)	5		38.5	V
V_{IN}	Input voltage range of Vn - Vn-1 where n = 2 to 7 and V1 - VSS	0		5	V
	TS	0		1.5	V
V_{CTM}	Customer Test Mode Entry V_{DD} > V7 + V_{CTM}	12		13	V
C_{TS}	Total capacitance on the TS Pin			200	pF
T_A	Ambient temperature	–40		85	°C
T_J	Junction temperature	–65		150	°C

(1) V_{DD} is equal to top of stack voltage.

6.4 Thermal Information

THERMAL METRIC(1)		DEVICE DSS 12 PINS	UNIT
$R_{\theta JA}$	Junction-to-ambient thermal resistance	67.3	°C/W
$R_{\theta JC(top)}$	Junction-to-case (top) thermal resistance	68.6	°C/W
$R_{\theta JB}$	Junction-to-board thermal resistance	35.9	°C/W
Ψ_{JT}	Junction-to-top characterization parameter	2.9	°C/W
Ψ_{JB}	Junction-to-board characterization parameter	35.9	°C/W

Copyright © 2026 Texas Instruments Incorporated

6.4 Thermal Information (continued)

THERMAL METRIC(1)		DEVICE	UNIT
		DSS	
		12 PINS	
$R_{\theta JC(bot)}$	Junction-to-case (bottom) thermal resistance	14	°C/W

(1) For more information about traditional and new thermal metrics, see the *Semiconductor and IC Package Thermal Metrics* application report.

6.5 DC Characteristics

Typical values stated where T_A = 25°C and VDD = 25 V, MIN/MAX values stated where T_A = –40°C to 85°C and VDD = 5 V to 38.5 V (unless otherwise noted).

PARAMETER		TEST CONDITIONS	MIN	TYP	MAX	UNIT
OVER VOLTAGE PROTECTION (OV)						
V_{OV}	OV Detection Range		3.55		5.1	V
V_{OV_STEP}	OV Detection Steps			25		mV
V_{OV_HYS}	OV Detection Hysteresis	Selected OV Hysteresis depends on part number. See device selection table for details.		V_{OV} – 50		mV
		Selected OV Hysteresis depends on part number. See device selection table for details.		V_{OV} – 100		mV
V_{OV_ACC}	OV Detection Accuracy	T_A = 25°C	–10		10	mV
	OV Detection Accuracy	0°C ≤ T_A ≤ 60°C	–20		20	mV
	OV Detection Accuracy	-40°C ≤ T_A ≤ 110°C	–50		50	mV
UNDER VOLTAGE PROTECTION (UV)						
V_{UV}	UV Detection Range		1.0		3.5	V
V_{UV_STEP}	UV Detection Steps			50		mV
V_{UV_HYS}	UV Detection Hysteresis	Selected OV Hysteresis depends on part number. See device selection table for details.		V_{UV} + 50		mV
		Selected OV Hysteresis depends on part number. See device selection table for details.		V_{UV} + 100		mV
V_{UV_ACC}	UV Detection Accuracy	T_A = 25°C	–30		30	mV
	UV Detection Accuracy	-40 ≤ T_A ≤ 110°C	–50		50	mV
V_{UV_MIN}	UV Detection Disabled Threshold	Vn - Vn-1 where n = 2 to 7 and V1 - VSS	450	500	550	mV
OVER TEMPERATURE PROTECTION (OT)						
T_{OT}	OT Detection Range	Available options: 62°C, 65°C, 70°C, 75°C, 80°C, 83°C	62.0		83.0	°C
$R_{OT_EXT_NTC}$	NTC OT Detection External Resistance			2850		Ω
				2570		
				2195		
				1915		
				1651		
				1525		
$R_{OT_EXT_PTC}$	PTC OT Detection External Resistance			111100		Ω

Copyright © 2026 Texas Instruments Incorporated

6.5 DC Characteristics (continued)

Typical values stated where T_A = 25°C and VDD = 25 V, MIN/MAX values stated where T_A = –40°C to 85°C and VDD = 5 V to 38.5 V (unless otherwise noted).

PARAMETER		TEST CONDITIONS	MIN	TYP	MAX	UNIT
T_{OT_ACC} (1)	OT Detection Accuracy (NTC)		–5		5	°C
T_{OT_HYS} (2)	OT Detection Hysteresis (NTC)			–10		°C
				4186		Ω
				3530		Ω
R_{TC}	Internal Pull Up Resistor	After TI Factory Trim	19.4	20	20.6	kΩ
UNDER TEMPERATURE PROTECTION (UT)						
T_{UT}	UT Detection Threshold		–30.0		0.0	°C
$R_{UT_EXT_NTC}$	NTC UT Detection External Resistance			111100		Ω
				68900		
				42200		
				26700		
R_{UT_ACC}	UT Detection External Resistance Accuracy		–2%		2%	
T_{UT_HYS}	UT Detection Hysteresis (NTC)			10		°C
				17800		Ω
T_{UT_ACC} (1)	UT Detection Accuracy (NTC)		–5		5	°C
OPEN WIRE PROTECTION (OW)						
V_{OW}	OW Detection Threshold	Vn < Vn-1 where n = 2 to 7		–200		mV
		V1 - VSS		500		mV
V_{OW_HYS}	OW Detection Hysteresis	Vn < Vn-1 where n = 1 to 7		V_{OW} +100		mV
V_{OW_ACC}	OW Detection Accuracy	-40 °C ≤ T_A ≤ 110°C	–25		25	mV
SUPPLY AND LEAKAGE CURRENT						
I_{CC}	Supply Current	No fault detected.		2	3.5	µA
I_{CC_FAULT}	Supply Current	Fault detected, COUT active High 6V output, DOUT active low. Other faults		20	25	µA
I_{CC_FAULT}	Supply Current	Fault detected, COUT active High 6V output, DOUT active low. UV fault only		3	5	µA
I_{IN} (2)	Input Current at Vx Pins	Vn - Vn-1 and V1 - VSS = 4V, where n = 2 to 7, Open Wire Enabled	–0.3		0.3	µA
		Vn - Vn-1 and V1 - VSS = 4V, where n = 2 to 7, Open Wire Disabled	–0.1		0.1	µA
OUTPUT DRIVE, COUT and DOUT, CMOS ACTIVE HIGH VERSIONS ONLY						
V_{OUT_AH}	Output Drive Voltage for COUT and DOUT, Active High 6V	Vn - Vn-1 or V1 - VSS > V_{OV}, where n = 2 to 7, VDD = 25V, I_{OH} = 100 µA measured out of COUT, DOUT pin.	6			V
	Output Drive Voltage for COUT and DOUT, Active High VDD	VDD - V_{COUT} or V_{DOUT}, Vn - Vn-1 or V1 - VSS > V_{OV}, where n = 2 to 7, I_{OH} = 10 µA measured out of COUT, DOUT pin.	0	1	1.5	V
	Output Drive Voltage for COUT and DOUT, Active High 6V	VDD - V_{COUT} or V_{DOUT}, If 6 of 7 cells are short circuited and only one cell remains powered and > V_{OV}, VDD = Vx (cell voltage), I_{OH} = 100 µA,	0	1	1.5	V
	Output Drive Voltage for COUT and DOUT, Active High 6V and VDD	Vn - Vn-1 and V1 - VSS < V_{OV}, where n = 2 to 7, VDD = 25 V, I_{OH} = 100 µA measured into pin		250	400	mV
R_{OUT_AH}	Internal Pull Up Resistor		80	100	120	kΩ

Copyright © 2026 Texas Instruments Incorporated

6.5 DC Characteristics (continued)

Typical values stated where T_A = 25°C and VDD = 25 V, MIN/MAX values stated where T_A = –40°C to 85°C and VDD = 5 V to 38.5 V (unless otherwise noted).

PARAMETER		TEST CONDITIONS	MIN	TYP	MAX	UNIT
$I_{OUT_AH_H}$	OUT Source Current (during OV)	Vn - Vn-1 or V1 - VSS > V_{OV}, where n = 2 to 7, VDD = 25 V, OUT = 0V. Measured out of COUT, DOUT pin			6.5	mA
$I_{OUT_AH_L}$	OUT Sink Current (no OV)	Vn - Vn-1 and V1 - VSS < V_{OV}, where n = 2 to 7, VDD = 25 V, OUT = VDD. Measured into COUT, DOUT pin	0.3		3	mA
OUTPUT DRIVE, COUT and DOUT, NCH OPEN DRAIN ACTIVE LOW VERSIONS ONLY						
V_{OUT_AL}	Output Drive Voltage for COUT and DOUT, Active Low	Vn - Vn-1 or V1 - VSS > V_{OV}, where n = 2 to 7, VDD = 25 V, I_{OH} = 100 µA measured into COUT, DOUT pin.		250	400	mV
$I_{OUT_AL_L}$	OUT Source Current (during OV)	Vn - Vn-1 or V1 - VSS > V_{OV}, where n = 2 to 7, VDD = 25 V, OUT = VDD. Measured into COUT, DOUT pin.	0.3		3	mA
$I_{OUT_AL_H}$	OUT Sink Current (no OV)	Vn - Vn-1 and V1 - VSS < V_{OV}, where n = 2 to 7, VDD = 25 V, OUT = VDD. Measured out of COUT, DOUT pin.			100	nA

(1) Assured by design. This accuracy assumes the external resistance is within ±2% of the R_OT_EXT values for the corresponding temperature threshold.
(2) Assured by design

6.6 Timing Requirements

Typical values stated where T_A = 25°C and VDD = 25 V, MIN/MAX values stated where T_A = –40°C to 85°C and VDD = 5 V to 38.5 V (unless otherwise noted).

PARAMETER		TEST CONDITIONS	MIN	TYP	MAX	UNIT
t_{OV_DELAY}	OV Delay Time			0.25		s
				0.5		s
				1		s
				2		s
				4		s
t_{UV_DELAY}	UV Delay Time			0.25		s
				0.5		s
				1		s
				2		s
t_{OT_DELAY}	OT Delay Time			4		s
t_{OW_DELAY}	OW Delay Time			4		s
t_{DELAY_ACC}	Delay Time Accuracy	For 0.25s, 0.5s delays	–128		128	ms
t_{DELAY_ACC}	Delay Time Accuracy	For 1s delays	–150		150	ms
t_{DELAY_DR}	Delay time drift across operating temp	For all delays other than 0.25s, 0.5s, 1s delays	–10%		10%	
t_{CTM_DELAY}	Fault Detection Delay Time during Customer Test Mode	See Customer Test Mode.		50		ms

Copyright © 2026 Texas Instruments Incorporated

7 Detailed Description

7.1 Overview

The BQ77207 family of devices provides a range of voltage and temperature monitoring including overvoltage (OVP), undervoltage (UVP), open wire (OW), and overtemperature (OT) protection for Li-ion battery pack systems. Each cell is monitored independently for overvoltage, undervoltage, and open-wire conditions. With the addition of an external NTC thermistor, the device can detect overtemperature conditions. An internal delay timer is initiated upon detection of an overvoltage, undervoltage, open-wire, or overtemperature condition. Upon expiration of the delay timer, the respective output is triggered into its active state (either high or low depending on the configuration). The overvoltage triggers the COUT pin if a fault is detected, and undervoltage triggers the DOUT pin if a fault is detected. If an undertemperature, overtemperature, or open-wire fault is detected, then both the DOUT and COUT are triggered.

For quicker production-line testing, the BQ77207 device provides a Customer Test Mode (CTM) with greatly reduced delay time.

7.2 Functional Block Diagram

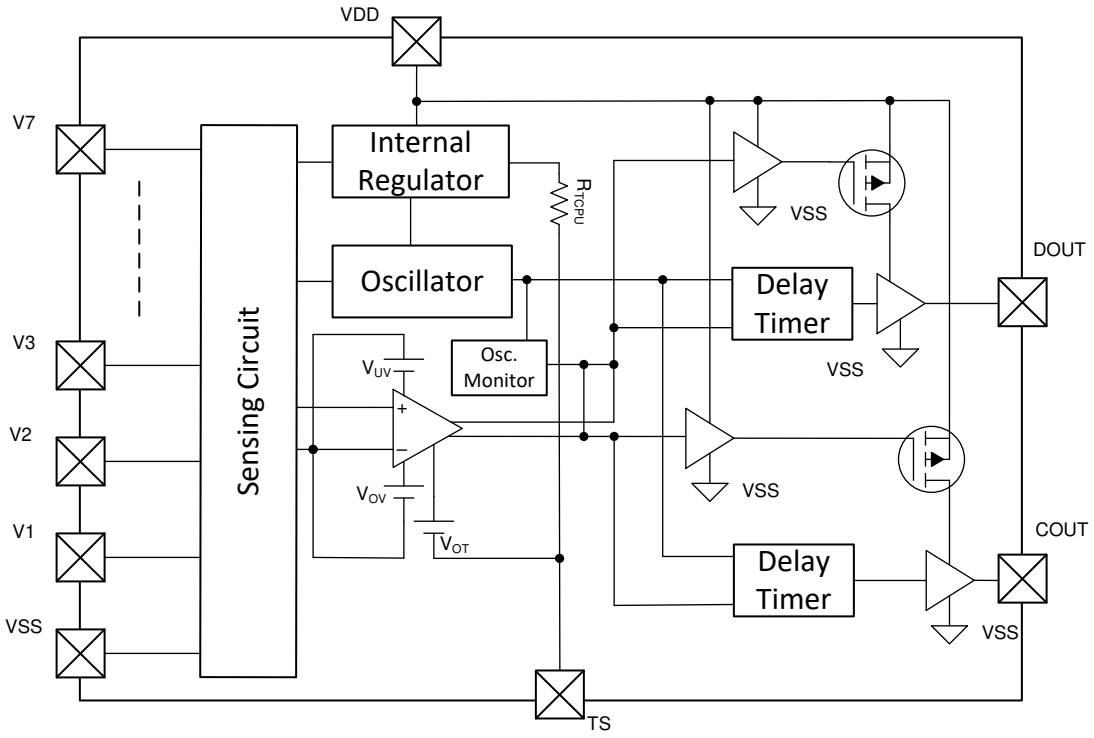

7.3 Feature Description

7.3.1 Voltage Fault Detection

In the BQ77207 device, each cell is monitored independently. Overvoltage is detected by comparing the actual cell voltage to a protection voltage reference, V_{OV}. If any cell voltage exceeds the programmed OV value, a timer circuit is activated. When the timer expires, the COUT pin goes from inactive to active state. The timer is reset if the cell voltage falls below the recovery threshold ($V_{OV} – V_{OV_HYS}$). Undervoltage is detected by comparing the actual cell voltage to a protection voltage reference, V_{UV}. If any cell voltage falls below the programmed UV value, a timer circuit is activated. When the timer expires, the DOUT pin goes from inactive to active state. The timer is reset if the cell voltage rises below the recovery threshold ($V_{UV} + V_{UV_HYS}$).

Copyright © 2026 Texas Instruments Incorporated

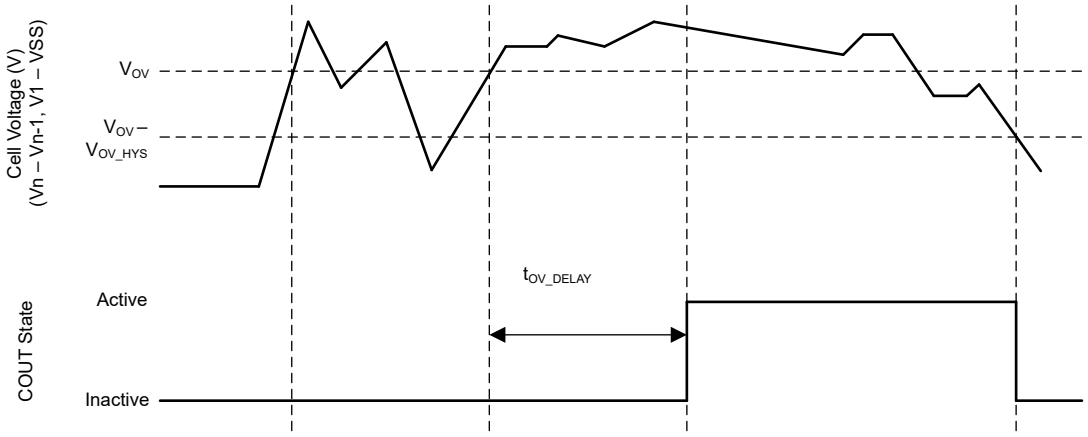

Figure 7-1. Timing for Overvoltage Sensing

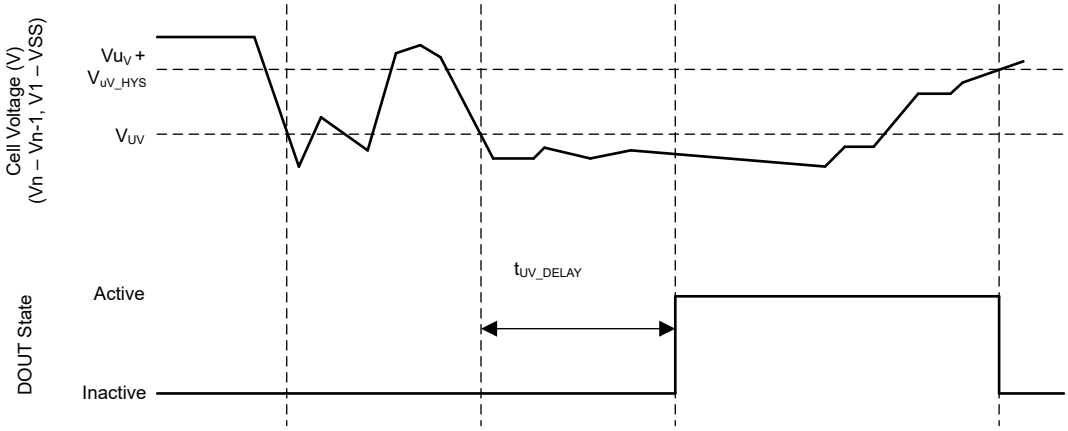

Figure 7-2. Timing for Undervoltage Sensing

7.3.2 Open Wire Fault Detection

In the BQ77207 device, each cell input is monitored independently to determine if the input is connected to a cell or not by applying a 50-µA pull down current to ground that is activated for 128 µs every 128 ms. If the device detects that Vn < Vn-1 – V_{OW} V, then a timer is activated. When the timer expires, the COUT and DOUT pins go from an inactive to active state. The timer is reset if the cell input rises above the recovery threshold (V_{OW} + V_{OW_HYS}). To recover both the COUT and DOUT output from active to inactive state, the open wire fault must be cleared (such as the broken connection from the device to the battery needs to be restored), and any other remaining faults (such as existing OVP or UVP faults) need to be cleared as well.

7.3.3 Temperature Fault Detection

In the BQ77207 device, the TS pin is ratiometrically monitored with an internal pull up resistance R_{NTC}. Overtemperature is detected by evaluating the TS input voltage to determine the external resistance falls below a protection resistance, R_{OT_EXT}. If the resistance falls below the programmed OT value, a timer circuit is activated. When the timer expires, the COUT and DOUT pins go from inactive to active state. The timer is reset if the resistance rises above the recovery threshold (R_{OT} + R_{OT_HYS}). If external capacitance is added to the TS pin, it needs to be within the spec limit shown in recommended operating conditions.

Note

Texas Instruments does not recommend adding an external capacitor to the TS pin. The capacitance on this pin will affect the TS measurement accuracy if greater than C_{TS}.

Copyright © 2026 Texas Instruments Incorporated

7.3.4 Oscillator Health Check

The device can detect if the internal oscillator slows down below the f_{OSC_FAULT} threshold. When this occurs then the COUT and DOUT go from inactive to active state. If the oscillator returns to normal then the fault recovers.

7.3.5 Sense Positive Input for Vx

This is an input to sense each single battery cell voltage. A series resistor and a capacitor across the cell for each input is required for noise filtering and stable voltage monitoring.

7.3.6 Output Drive, COUT and DOUT

These pins serve as the fault signal outputs, and may be ordered in either active HIGH with drive to 6V or active LOW options configured through internal OTP.

The COUT and DOUT will respond per the following table when a fault is detected, if the specific fault is enabled.

Table 7-1. Fault Detection vs COUT and DOUT Action

FAULT Detected	COUT	DOUT
Overvoltage	Active	Inactive
Undervoltage	Inactive	Active
Open Wire	Active	Active
Over Temperature	Active	Active
Oscillator Health	Active	Active

7.3.7 The LATCH Function

The device can be enabled to latch the fault signal, which effectively disables the recovery functions of all fault detections. The only way to recover from a fault state when the latch is enabled is a POR of the device.

7.3.8 Supply Input, VDD

This pin is the unregulated input power source for the IC. A series resistor is connected to limit the current, and a capacitor is connected to ground for noise filtering.

7.4 Device Functional Modes

7.4.1 NORMAL Mode

When COUT and DOUT are inactive (no fault detected) the device operates in NORMAL mode and device is monitoring for voltage, open wire and temperature faults.

The COUT and DOUT pins are inactive and if configured:

- Active high is low.
- Active low is being externally pulled up and is an open drain.

7.4.2 FAULT Mode

FAULT mode is entered if the COUT or DOUT pins are activated. The OUT pin will either pull high internally, if configured as active high, or will be pulled low internally, if configured as active low. When COUT and DOUT are deactivated the device returns to NORMAL mode.

7.4.3 Customer Test Mode

Customer Test Mode (CTM) helps to reduce test time for checking the delay timer parameter once the circuit is implemented in the battery pack. To enter CTM, VDD should be set to at least V_{CTM} higher than V7 (see Figure 7-3). The delay timer is greater than 10 ms, but considerably shorter than the timer delay in normal operation. To exit Customer Test Mode, remove the VDD to a V7 voltage differential of 10 V so that the decrease in this value automatically causes an exit.

Copyright © 2026 Texas Instruments Incorporated

CAUTION

Avoid exceeding any Absolute Maximum Voltages on any pins when placing the part into Customer Test Mode. Also avoid exceeding Absolute Maximum Voltages for the individual cell voltages (VCn–VCn-1) and (V1–VSS). Stressing the pins beyond the rated limits may cause permanent damage to the device.

Figure 7-3 shows the timing for the Customer Test Mode.

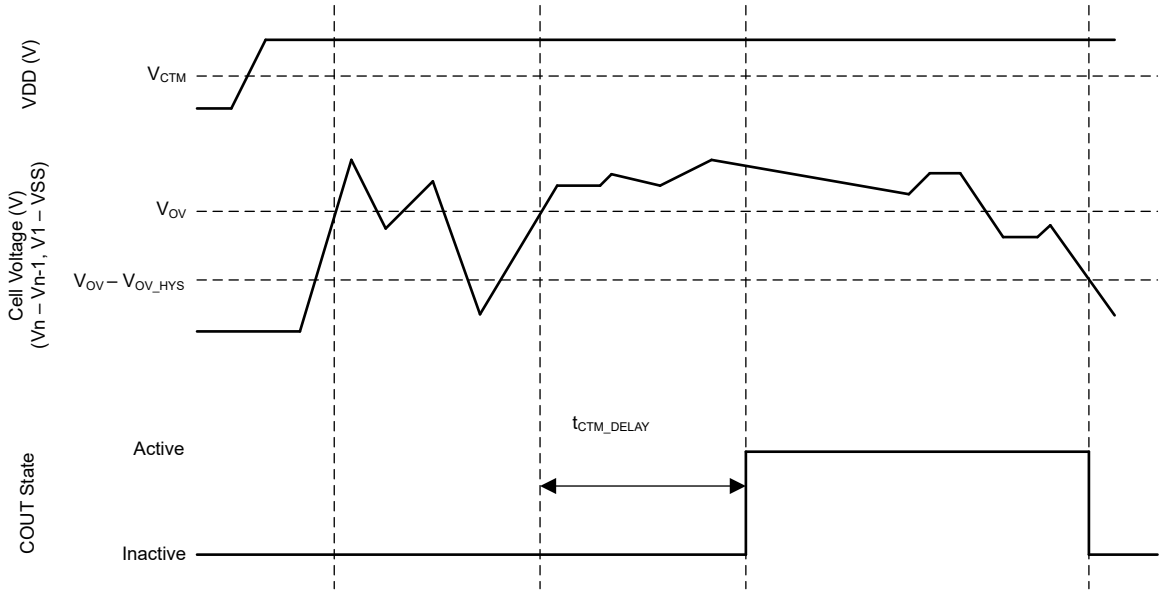

Figure 7-3. Timing for Customer Test Mode

Copyright © 2026 Texas Instruments Incorporated

8 Application and Implementation

Note

Information in the following applications sections is not part of the TI component specification, and TI does not warrant its accuracy or completeness. TI's customers are responsible for determining suitability of components for their purposes, as well as validating and testing their design implementation to confirm system functionality.

8.1 Application Information

Changes to the ranges stated in Table 8-1 will impact the accuracy of the cell measurements.

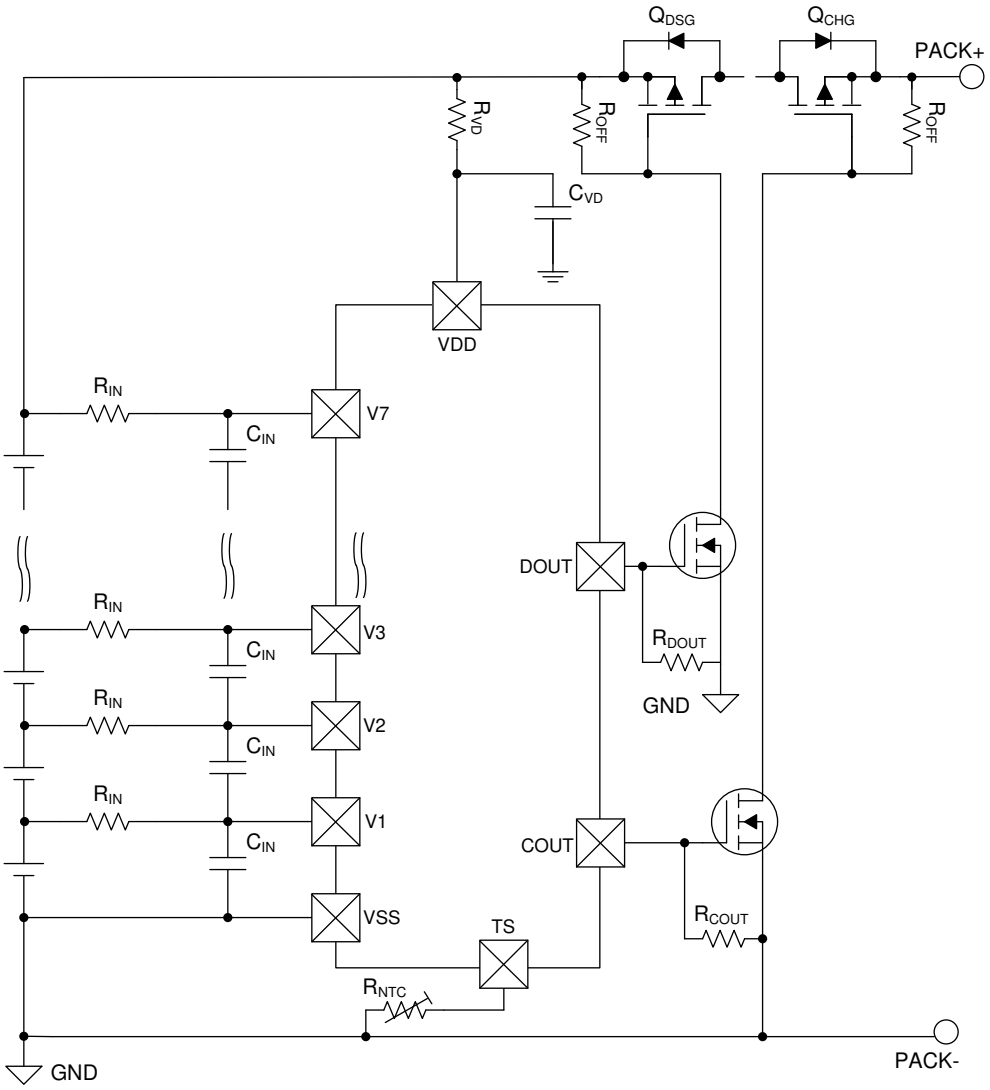

Figure 8-1. Application Configuration

8.1.1 Design Requirements

Changes to the ranges stated in Table 8-1 will impact the accuracy of the cell measurements. Figure 8-1 shows each external component.

Table 8-1. Parameters

PARAMETER	EXTERNAL COMPONENT	MIN	NOM	MAX	UNIT
Voltage monitor filter resistance	R_{IN}	900	1000	1100	Ω
Voltage monitor filter capacitance	C_{IN}	0.01		0.1	µF
Supply voltage filter resistance	R_{VD}	100	300	1K	Ω
Supply voltage filter capacitance	C_{VD}	0.05	0.1	1	µF

Note

The device is calibrated using an R_{IN} value = 1 kΩ. Using a value other than this recommended value changes the accuracy of the cell voltage measurements and V_{OV} trigger level.

8.1.2 Detailed Design Procedure

Figure 8-2 shows the measurement for current consumption for the product for both VDD and Vx.

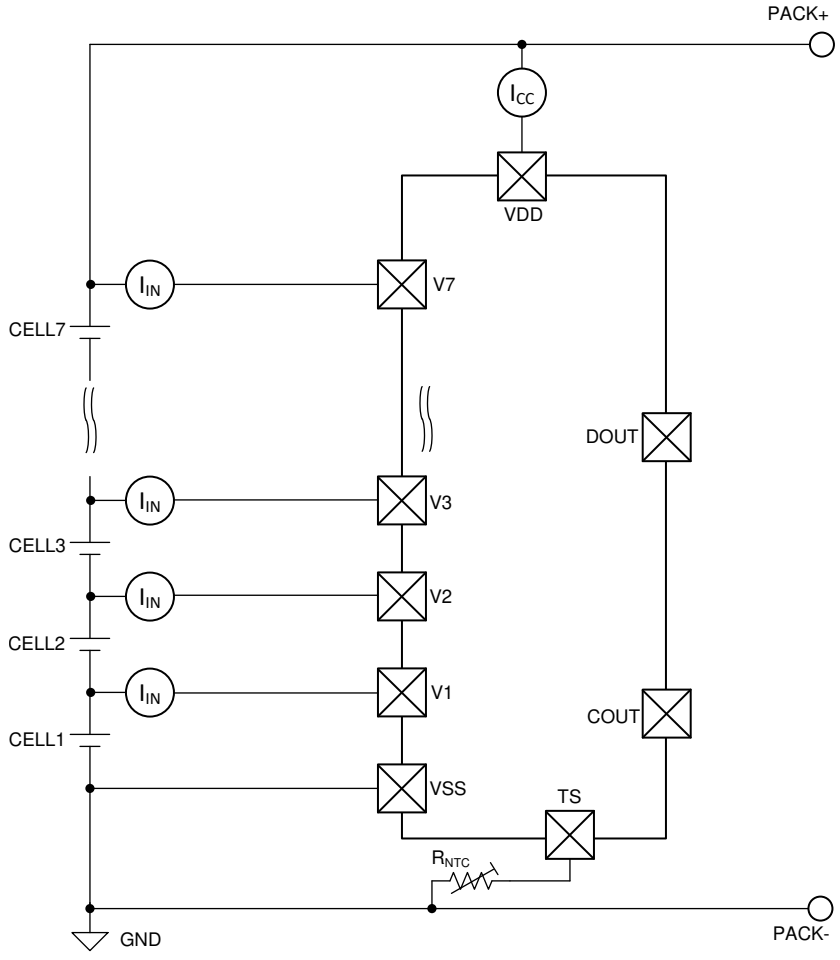

Figure 8-2. Configuration for IC Current Consumption Test

Copyright © 2026 Texas Instruments Incorporated

8.1.2.1 Cell Connection Sequence

The BQ77207 device can be connected to the array of cells in any order without damaging the device.

During cell attachment, the device could detect a fault if the cells are not connected within a fault detection delay period. If this occurs, then COUT and/or DOUT could transition from inactive to active. Both COUT and DOUT can be tied to VSS or VDD to prevent any change in output state during cell attach.

Copyright © 2026 Texas Instruments Incorporated

8.2 Systems Example

In this application example, the choice of a FUSE or FETs is required on the COUT and DOUT pins—configured as an active high drive to 6V outputs.

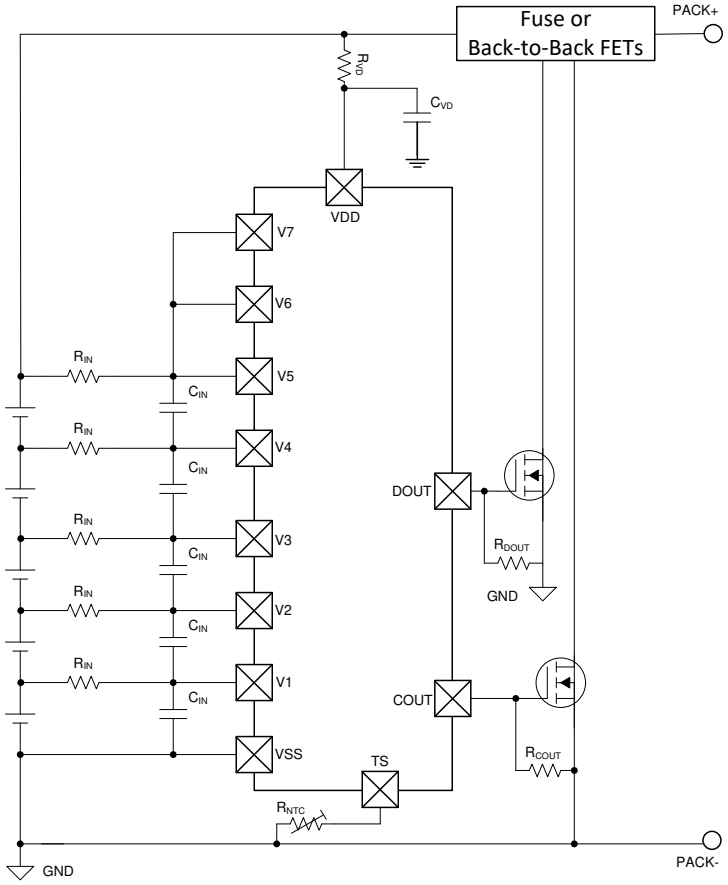

Figure 8-3. 5-Series Cell Configuration with Active High 6V Option

When paring with the BQ769x2 or BQ76940 devices, the top cell must be used. For the BQ77207 device to drive the CHG and DSG FETs, the active high 6V option is preferred. Its COUT and DOUT are controlling two N-CH FETs to jointly control the CHG and DSG FETs with the monitoring device. For such joint architecture, the open-wire feature of the BQ77207 device may be affected if the primary protector or monitor device is actively measuring the cells. Care is needed to ensure the V_{OW} spec of the BQ77207 device is met or to choose a version of the BQ77207 device with open wire disabled. When working with a BQ769x2 device, the LOOPSLOW setting of the BQ769x2 device should be set to 0x11 to ensure the BQ77207 V_{OW} spec is met.

Copyright © 2026 Texas Instruments Incorporated

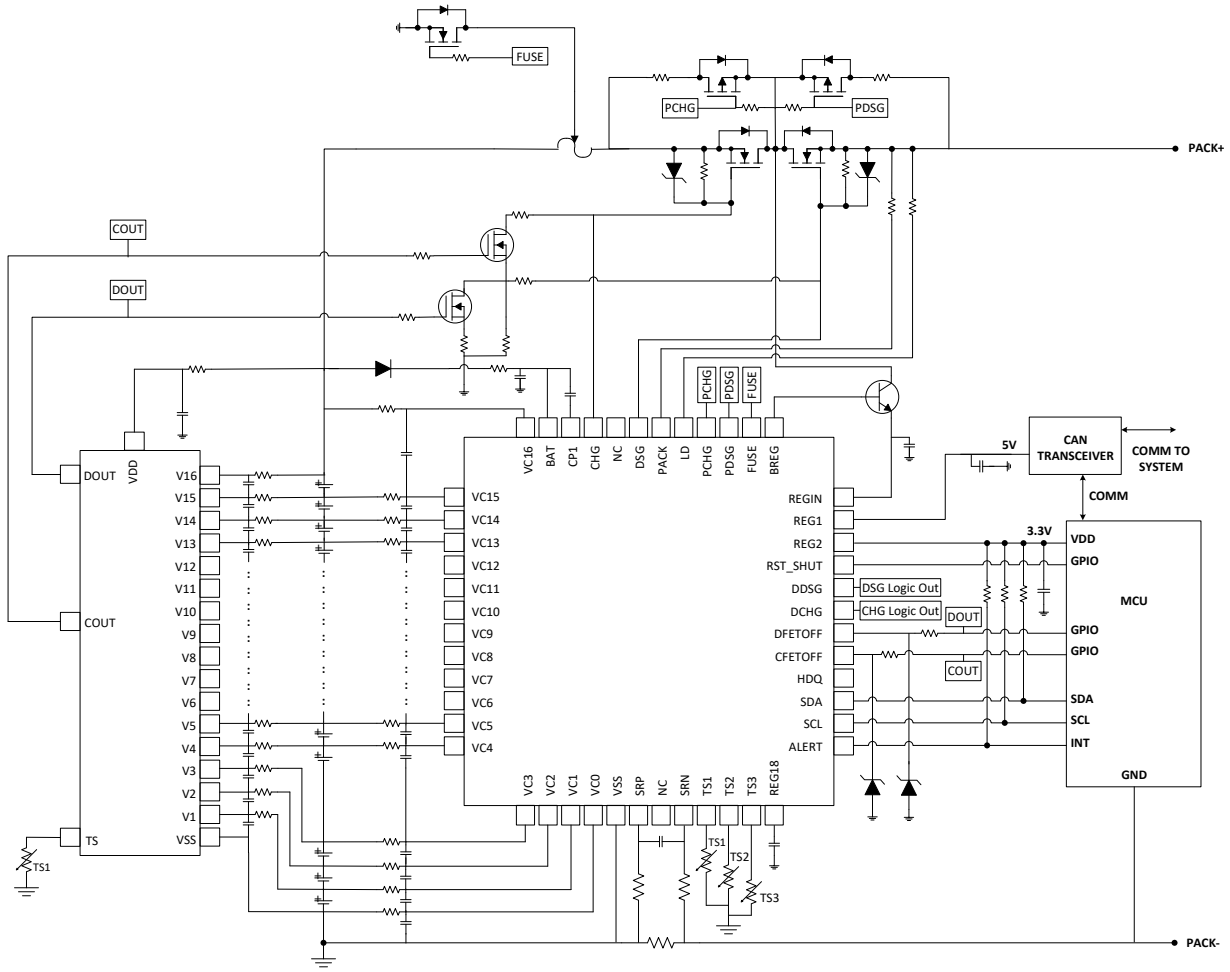

Figure 8-4. BQ77207 with BQ76952

8.3 Power Supply Recommendations

The maximum power supply of this device is 38.5 V on VDD.

8.4 Layout

8.4.1 Layout Guidelines

- Ensure the RC filters for the Vn and VDD pins are placed as close as possible to the target terminal.
- The VSS pin should be routed to the CELL– terminal.

8.4.2 Layout Example

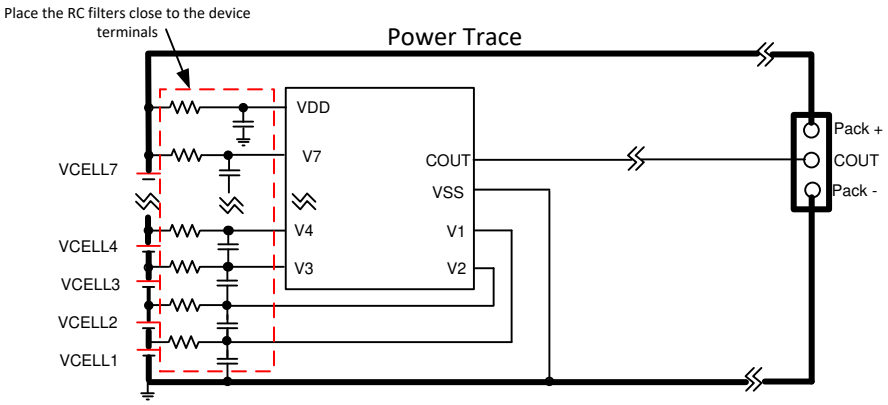

Figure 8-5. Example Layout

Copyright © 2026 Texas Instruments Incorporated

9 Device and Documentation Support

9.1 Third-Party Products Disclaimer

TI'S PUBLICATION OF INFORMATION REGARDING THIRD-PARTY PRODUCTS OR SERVICES DOES NOT CONSTITUTE AN ENDORSEMENT REGARDING THE SUITABILITY OF SUCH PRODUCTS OR SERVICES OR A WARRANTY, REPRESENTATION OR ENDORSEMENT OF SUCH PRODUCTS OR SERVICES, EITHER ALONE OR IN COMBINATION WITH ANY TI PRODUCT OR SERVICE.

9.2 Receiving Notification of Documentation Updates

To receive notification of documentation updates, navigate to the device product folder on ti.com. Click on *Notifications* to register and receive a weekly digest of any product information that has changed. For change details, review the revision history included in any revised document.

9.3 Support Resources

TI E2E™ support forums are an engineer's go-to source for fast, verified answers and design help — straight from the experts. Search existing answers or ask your own question to get the quick design help you need.

Linked content is provided "AS IS" by the respective contributors. They do not constitute TI specifications and do not necessarily reflect TI's views; see TI's Terms of Use.

9.4 Trademarks

TI E2E™ is a trademark of Texas Instruments.
All trademarks are the property of their respective owners.

9.5 Electrostatic Discharge Caution



This integrated circuit can be damaged by ESD. Texas Instruments recommends that all integrated circuits be handled with appropriate precautions. Failure to observe proper handling and installation procedures can cause damage.

ESD damage can range from subtle performance degradation to complete device failure. Precision integrated circuits may be more susceptible to damage because very small parametric changes could cause the device not to meet its published specifications.

9.6 Glossary

TI Glossary	This glossary lists and explains terms, acronyms, and definitions.

Copyright © 2026 Texas Instruments Incorporated

10 Revision History

NOTE: Page numbers for previous revisions may differ from page numbers in the current version.

Changes from Revision C (October 2024) to Revision D (May 2026)	Page
• Added BQ7720706 to the *Device Comparison Table*	3

Changes from Revision B (September 2024) to Revision C (October 2024)	Page
• Modified the Device Comparison Table	3

Changes from Revision A (June 2022) to Revision B (September 2024)	Page
• Added the BQ7720704 to Device Comparison Table	3

Changes from Revision * (December 2021) to Revision A (June 2022)	Page
• Added the BQ7720701 and BQ7720702 devices to Device Comparison Table; added the OVP and UVP output delays	3

11 Mechanical, Packaging, and Orderable Information

The following pages include mechanical, packaging, and orderable information. This information is the most current data available for the designated devices. This data is subject to change without notice and revision of this document. For browser-based versions of this data sheet, refer to the left-hand navigation.

Copyright © 2026 Texas Instruments Incorporated

PACKAGING INFORMATION

Orderable part number	Status (1)	Material type (2)	Package | Pins	Package qty | Carrier	RoHS (3)	Lead finish/ Ball material (4)	MSL rating/ Peak reflow (5)	Op temp (°C)	Part marking (6)
BQ7720700DSSR	Active	Production	WSON (DSS) | 12	3000 | LARGE T&R	Yes	SN	Level-1-260C-UNLIM	-40 to 110	720700
BQ7720700DSSR.A	Active	Production	WSON (DSS) | 12	3000 | LARGE T&R	Yes	SN	Level-1-260C-UNLIM	-40 to 110	720700
BQ7720701DSSR	Active	Production	WSON (DSS) | 12	3000 | LARGE T&R	Yes	SN	Level-1-260C-UNLIM	-40 to 110	720701
BQ7720701DSSR.A	Active	Production	WSON (DSS) | 12	3000 | LARGE T&R	Yes	SN	Level-1-260C-UNLIM	-40 to 110	720701
BQ7720702DSSR	Active	Production	WSON (DSS) | 12	3000 | LARGE T&R	Yes	SN	Level-1-260C-UNLIM	-40 to 110	720702
BQ7720702DSSR.A	Active	Production	WSON (DSS) | 12	3000 | LARGE T&R	Yes	SN	Level-1-260C-UNLIM	-40 to 110	720702
BQ7720704DSSR	Active	Production	WSON (DSS) | 12	3000 | LARGE T&R	Yes	NIPDAU	Level-1-260C-UNLIM	-40 to 110	720704
BQ7720704DSSR.A	Active	Production	WSON (DSS) | 12	3000 | LARGE T&R	Yes	NIPDAU	Level-1-260C-UNLIM	-40 to 110	720704
BQ7720705DSSR	Active	Production	WSON (DSS) | 12	3000 | LARGE T&R	Yes	NIPDAU	Level-1-260C-UNLIM	-40 to 110	720705
BQ7720705DSSR.A	Active	Production	WSON (DSS) | 12	3000 | LARGE T&R	Yes	NIPDAU	Level-1-260C-UNLIM	-40 to 110	720705
BQ7720706DSSR	Active	Production	WSON (DSS) | 12	3000 | LARGE T&R	Yes	SN	Level-1-260C-UNLIM	-40 to 110	720706

(1) **Status:** For more details on status, see our product life cycle.

(2) **Material type:** When designated, preproduction parts are prototypes/experimental devices, and are not yet approved or released for full production. Testing and final process, including without limitation quality assurance, reliability performance testing, and/or process qualification, may not yet be complete, and this item is subject to further changes or possible discontinuation. If available for ordering, purchases will be subject to an additional waiver at checkout, and are intended for early internal evaluation purposes only. These items are sold without warranties of any kind.

(3) **RoHS values:** Yes, No, RoHS Exempt. See the TI RoHS Statement for additional information and value definition.

(4) **Lead finish/Ball material:** Parts may have multiple material finish options. Finish options are separated by a vertical ruled line. Lead finish/Ball material values may wrap to two lines if the finish value exceeds the maximum column width.

(5) **MSL rating/Peak reflow:** The moisture sensitivity level ratings and peak solder (reflow) temperatures. In the event that a part has multiple moisture sensitivity ratings, only the lowest level per JEDEC standards is shown. Refer to the shipping label for the actual reflow temperature that will be used to mount the part to the printed circuit board.

(6) **Part marking:** There may be an additional marking, which relates to the logo, the lot trace code information, or the environmental category of the part.

Multiple part markings will be inside parentheses. Only one part marking contained in parentheses and separated by a "~" will appear on a part. If a line is indented then it is a continuation of the previous line and the two combined represent the entire part marking for that device.

Important Information and Disclaimer: The information provided on this page represents TI's knowledge and belief as of the date that it is provided. TI bases its knowledge and belief on information provided by third parties, and makes no representation or warranty as to the accuracy of such information. Efforts are underway to better integrate information from third parties. TI has taken and continues to take reasonable steps to provide representative and accurate information but may not have conducted destructive testing or chemical analysis on incoming materials and chemicals. TI and TI suppliers consider certain information to be proprietary, and thus CAS numbers and other limited information may not be available for release.

In no event shall TI's liability arising out of such information exceed the total purchase price of the TI part(s) at issue in this document sold by TI to Customer on an annual basis.

TAPE AND REEL INFORMATION

REEL DIMENSIONS

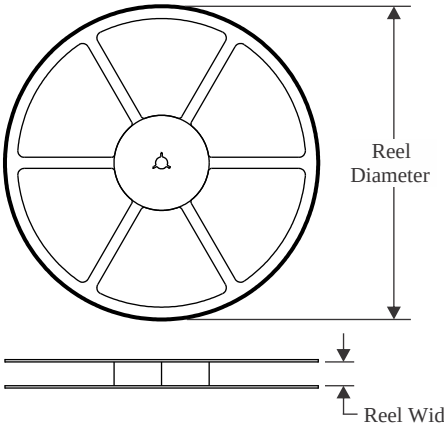

TAPE DIMENSIONS

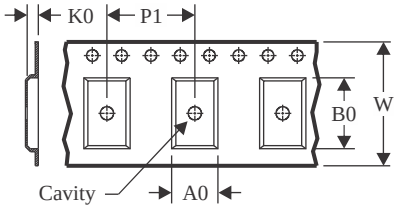

A0	Dimension designed to accommodate the component width
B0	Dimension designed to accommodate the component length
K0	Dimension designed to accommodate the component thickness
W	Overall width of the carrier tape
P1	Pitch between successive cavity centers

QUADRANT ASSIGNMENTS FOR PIN 1 ORIENTATION IN TAPE

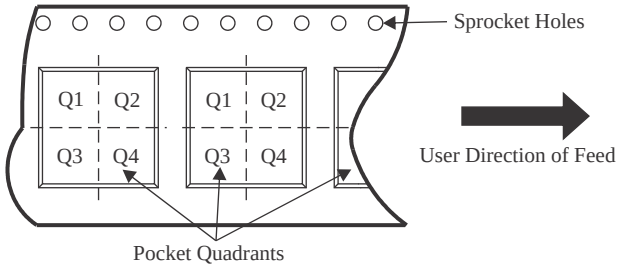

*All dimensions are nominal

Device	Package Type	Package Drawing	Pins	SPQ	Reel Diameter (mm)	Reel Width W1 (mm)	A0 (mm)	B0 (mm)	K0 (mm)	P1 (mm)	W (mm)	Pin1 Quadrant
BQ7720700DSSR	WSON	DSS	12	3000	180.0	8.4	2.25	3.25	1.05	4.0	8.0	Q1
BQ7720701DSSR	WSON	DSS	12	3000	180.0	8.4	2.25	3.25	1.05	4.0	8.0	Q1
BQ7720702DSSR	WSON	DSS	12	3000	180.0	8.4	2.25	3.25	1.05	4.0	8.0	Q1
BQ7720704DSSR	WSON	DSS	12	3000	180.0	8.4	2.25	3.25	1.05	4.0	8.0	Q1
BQ7720705DSSR	WSON	DSS	12	3000	180.0	8.4	2.25	3.25	1.05	4.0	8.0	Q1
BQ7720706DSSR	WSON	DSS	12	3000	180.0	8.4	2.25	3.25	1.05	4.0	8.0	Q1

TAPE AND REEL BOX DIMENSIONS

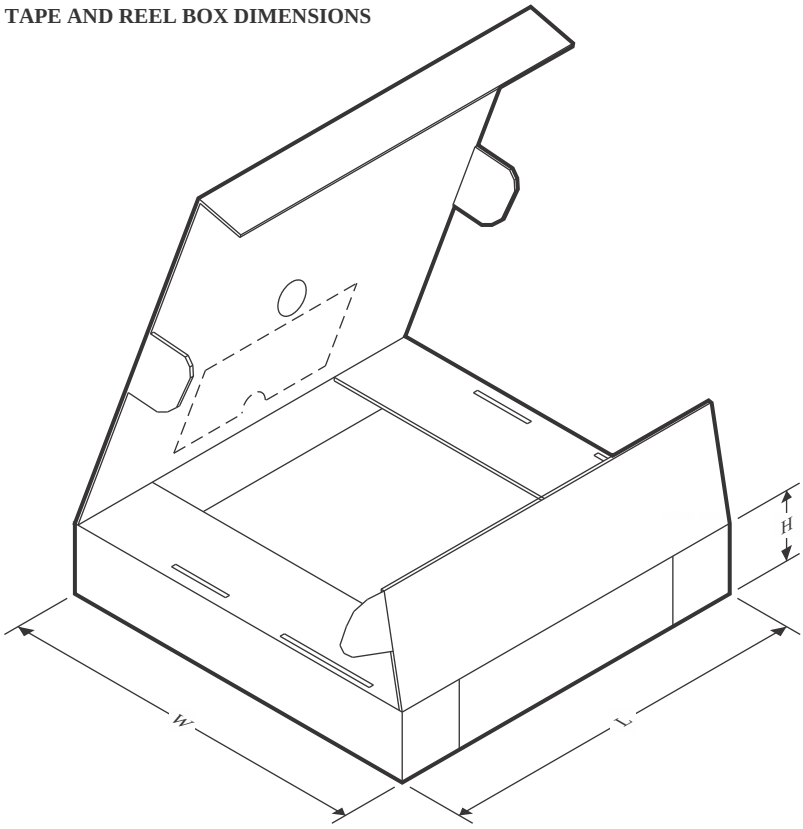

*All dimensions are nominal

Device	Package Type	Package Drawing	Pins	SPQ	Length (mm)	Width (mm)	Height (mm)
BQ7720700DSSR	WSON	DSS	12	3000	210.0	185.0	35.0
BQ7720701DSSR	WSON	DSS	12	3000	210.0	185.0	35.0
BQ7720702DSSR	WSON	DSS	12	3000	210.0	185.0	35.0
BQ7720704DSSR	WSON	DSS	12	3000	210.0	185.0	35.0
BQ7720705DSSR	WSON	DSS	12	3000	210.0	185.0	35.0
BQ7720706DSSR	WSON	DSS	12	3000	210.0	185.0	35.0

GENERIC PACKAGE VIEW

DSS 12 WSON - 0.8 mm max height

PLASTIC SMALL OUTLINE - NO LEAD

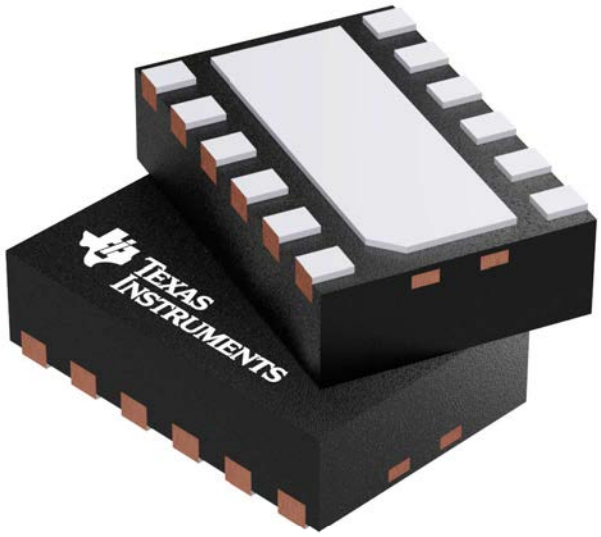

Images above are just a representation of the package family, actual package may vary.
Refer to the product data sheet for package details.

PACKAGE OUTLINE

DSS0012B

WSON - 0.8 mm max height

PLASTIC SMALL OUTLINE - NO LEAD

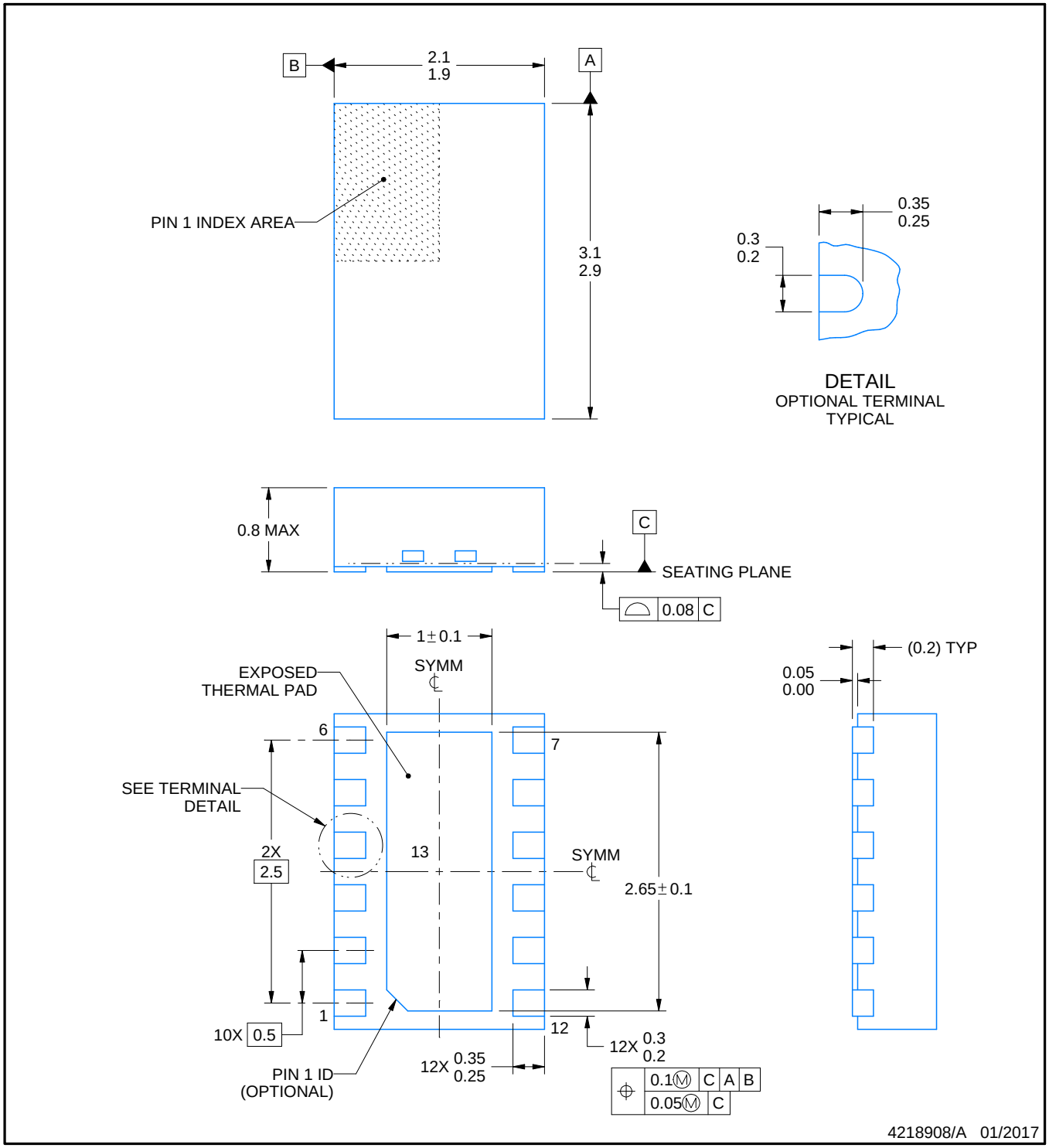

NOTES:

1. All linear dimensions are in millimeters. Any dimensions in parenthesis are for reference only. Dimensioning and tolerancing per ASME Y14.5M.
2. This drawing is subject to change without notice.
3. The package thermal pad must be soldered to the printed circuit board for optimal thermal and mechanical performance.

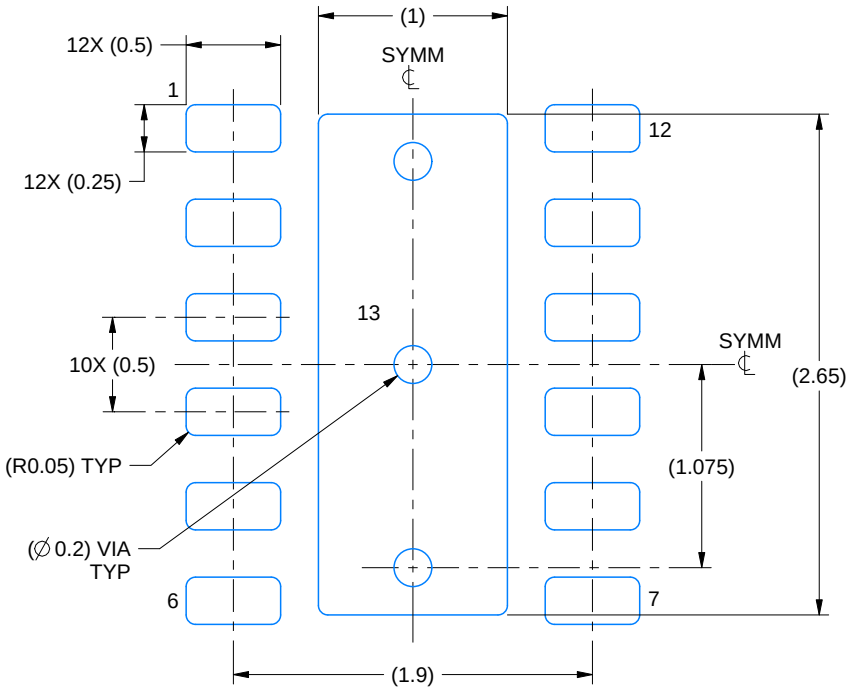

LAND PATTERN EXAMPLE
EXPOSED METAL SHOWN
SCALE:25X

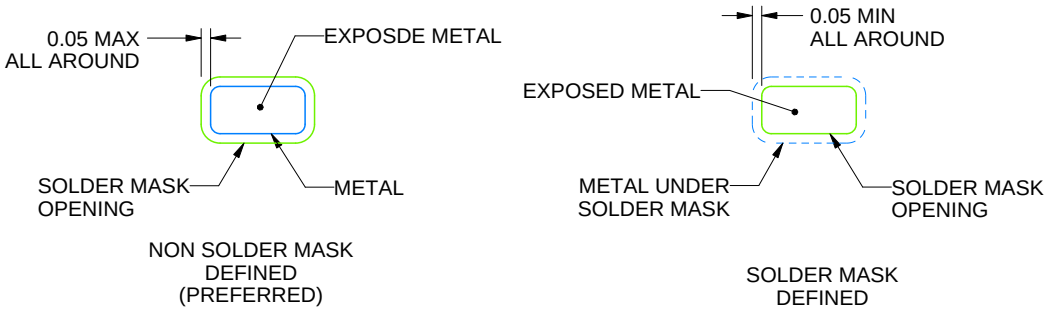

SOLDER MASK DETAILS

4218908/A 01/2017

NOTES: (continued)

4. This package is designed to be soldered to a thermal pad on the board. For more information, see Texas Instruments literature number SLUA271 (www.ti.com/lit/slua271).
5. Vias are optional depending on application, refer to device data sheet. If any vias are implemented, refer to their locations shown on this view. It is recommended that vias under paste be filled, plugged or tented.

EXAMPLE STENCIL DESIGN

DSS0012B

WSON - 0.8 mm max height

PLASTIC SMALL OUTLINE - NO LEAD

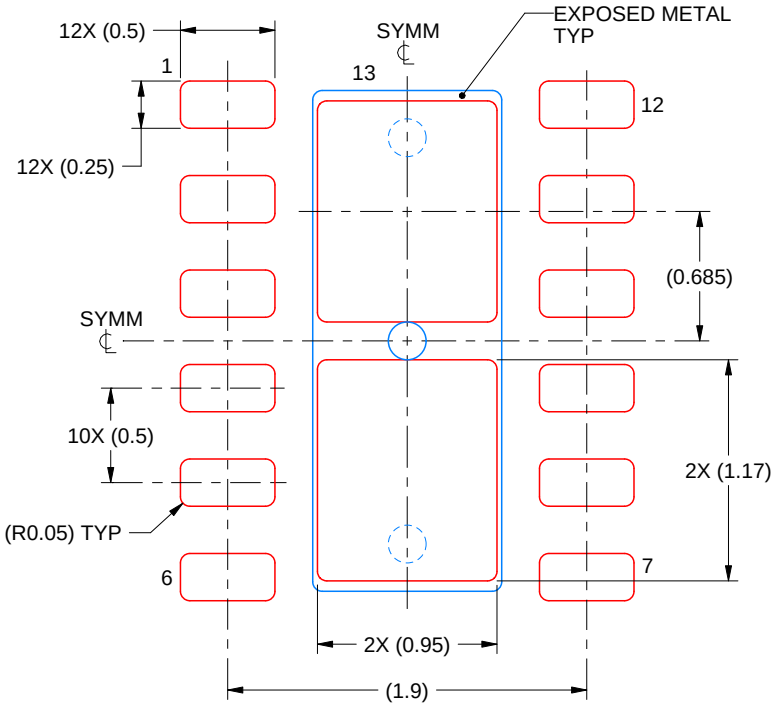

SOLDER PASTE EXAMPLE
BASED ON 0.125 mm THICK STENCIL

EXPOSED PAD 13:
83% PRINTED SOLDER COVERAGE BY AREA UNDER PACKAGE
SCALE:25X

4218908/A 01/2017

NOTES: (continued)

6. Laser cutting apertures with trapezoidal walls and rounded corners may offer better paste release. IPC-7525 may have alternate design recommendations.

IMPORTANT NOTICE AND DISCLAIMER

TI PROVIDES TECHNICAL AND RELIABILITY DATA (INCLUDING DATASHEETS), DESIGN RESOURCES (INCLUDING REFERENCE DESIGNS), APPLICATION OR OTHER DESIGN ADVICE, WEB TOOLS, SAFETY INFORMATION, AND OTHER RESOURCES “AS IS” AND WITH ALL FAULTS, AND DISCLAIMS ALL WARRANTIES, EXPRESS AND IMPLIED, INCLUDING WITHOUT LIMITATION ANY IMPLIED WARRANTIES OF MERCHANTABILITY, FITNESS FOR A PARTICULAR PURPOSE OR NON-INFRINGEMENT OF THIRD PARTY INTELLECTUAL PROPERTY RIGHTS.

These resources are intended for skilled developers designing with TI products. You are solely responsible for (1) selecting the appropriate TI products for your application, (2) designing, validating and testing your application, and (3) ensuring your application meets applicable standards, and any other safety, security, regulatory or other requirements.

These resources are subject to change without notice. TI grants you permission to use these resources only for development of an application that uses the TI products described in the resource. Other reproduction and display of these resources is prohibited. No license is granted to any other TI intellectual property right or to any third party intellectual property right. TI disclaims responsibility for, and you fully indemnify TI and its representatives against any claims, damages, costs, losses, and liabilities arising out of your use of these resources.

TI’s products are provided subject to TI’s Terms of Sale, TI’s General Quality Guidelines, or other applicable terms available either on ti.com or provided in conjunction with such TI products. TI’s provision of these resources does not expand or otherwise alter TI’s applicable warranties or warranty disclaimers for TI products. Unless TI explicitly designates a product as custom or customer-specified, TI products are standard, catalog, general purpose devices.

TI objects to and rejects any additional or different terms you may propose.

Copyright © 2026, Texas Instruments Incorporated

Last updated 10/2025

ENTEGRECİ

Bu belge www.entegreci.com üzerinden sunulmaktadır.

Elektronik komponent tedarikinde Entegreci

Entegreci, Eskişehir merkezli, Türkiye geneline satış yapan bir elektronik komponent mağazasıdır. Entegreler (IC), mikrodenetleyiciler, transistörler, diyotlar, pasif elemanlar, konnektörler, modüller ve geliştirme kartları tek adetten seri üretim adetlerine kadar satılır. Ürün sayfalarında güncel stok durumunu, fiyatı ve datasheet bağlantısını bulabilirsiniz.

Parça koduyla arama

Üretici parça numarasını yazın; stok ve fiyatı hemen görün.

www.entegreci.com

Ürün kategorileri

Entegreden kapasitöre tüm elektronik komponent kategorileri.

Kategorilere göz atın

Üreticiler

Aradığınız üreticinin ürünlerini tek sayfada inceleyin.

Üreticileri görün

Toplu alım ve teklif

Listede olmayan ya da yüksek adetli parçalar için teklif isteyin.

Teklif isteyin

www.entegreci.com | **destek@entegreci.com** | **0850 305 90 34**

Entegreci is an online electronic components store based in Türkiye. Search by manufacturer part number to see stock, prices and datasheets for integrated circuits, microcontrollers, transistors, passive components and connectors, or request a quote for parts that are not listed.

Bu sayfa Entegreci tarafından eklenmiştir. Belgenin önceki sayfaları asıl yayıncısına aittir ve içeriği değiştirilmemiştir; en güncel sürüm için belgenin yayıncısına başvurun.