BQ7718 Overvoltage Protection for 2-Series to 5-Series Cell Li-Ion Batteries with Internal Delay Timer

1 Features

- 2-, 3-, 4-, and 5-series cell overvoltage protection
- Internal delay timer
- Fixed OVP threshold
- High-accuracy overvoltage protection: ± 10 mV
- Low power consumption I_{CC} ≈ 1 µA ($V_{CELL(ALL)}$ < $V_{PROTECT}$)
- Low leakage current per cell input < 100 nA
- Functional Safety-Capable
  - Documentation available to aid functional safety system design
- Package footprint options:
  - Small 8-pin QFN (3.00 mm × 4.00 mm)
  - Leaded 8-pin MSOP (3.00 mm × 5.00 mm, including leads)

2 Applications

- Protection for li-ion battery packs used in:
  - Handheld garden tools
  - Handheld power tools
  - Cordless vacuum cleaners
  - UPS battery backup
  - Light electric vehicles (eBike, eScooter, pedal assist bicycles)

3 Description

The BQ7718xy family of products provides an overvoltage monitor and protector for Li-Ion battery pack systems. Each cell is monitored independently for an overvoltage condition. For quicker production-line testing, the BQ7718xy device provides a Customer Test Mode (CTM) with greatly reduced delay time.

In the BQ7718xy device, an internal delay timer is initiated upon detection of an overvoltage condition on any cell. Upon expiration of the delay timer, the output is triggered into its active state (either high or low depending on the configuration).

Device Information Table

PART NUMBER	PACKAGE	BODY SIZE (NOM)
BQ771800(1)	DPJ (8)	3.00 mm × 4.00 mm
BQ771800(2)	DGK (8)	3.00 mm x 3.00 mm (3.00 mm x 5.00 mm, including leads)

(1) For available catalog packages, see the orderable addendum at the end of the data sheet and *Section 5*.
(2) Contact TI for more information.

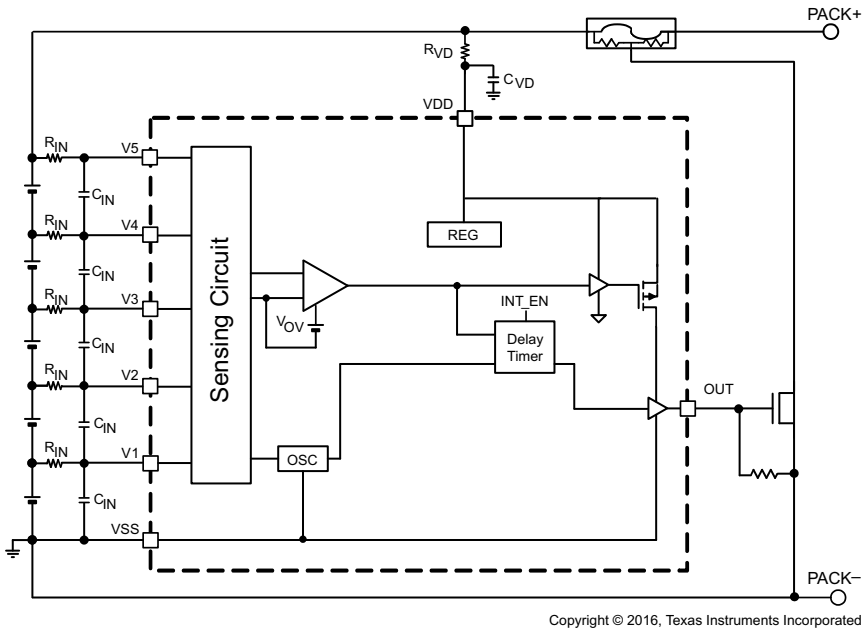

Copyright © 2016, Texas Instruments Incorporated

Simplified Schematic

An IMPORTANT NOTICE at the end of this data sheet addresses availability, warranty, changes, use in safety-critical applications, intellectual property matters and other important disclaimers. UNLESS OTHERWISE NOTED, this document contains PRODUCTION DATA.

Table of Contents

1 Features....1
2 Applications....1
3 Description....1
4 Revision History....2
5 Device Comparison Table....3
6 Pin Configuration and Functions....4
7 Specifications....5
7.1 Absolute Maximum Ratings....5
7.2 ESD Ratings....5
7.3 Recommended Operating Conditions....5
7.4 Thermal Information....5
7.5 DC Characteristics....6
7.6 Timing Requirements....7
7.7 Typical Characteristics....8
8 Detailed Description....9
8.1 Overview....9
8.2 Functional Block Diagram....9
8.3 Feature Description....9
8.4 Device Functional Modes....10
9 Application and Implementation....12
9.1 Application Information....12
9.2 Systems Examples....15
10 Power Supply Recommendations....15
11 Layout....16
11.1 Layout Guidelines....16
11.2 Layout Example....16
12 Device and Documentation Support....17
12.1 Documentation Support....17
12.2 Third-Party Products Disclaimer....17
12.3 Receiving Notification of Documentation Updates....17
12.4 Support Resources....17
12.5 Trademarks....17
12.6 Electrostatic Discharge Caution....17
12.7 Glossary....17
13 Mechanical, Packaging, and Orderable Information....17

4 Revision History

NOTE: Page numbers for previous revisions may differ from page numbers in the current version.

Changes from Revision K (April 2021) to Revision L (June 2021)	Page
• Changed the BQ771825 device to Production Data	3

Changes from Revision J (September 2020) to Revision K (June 2021)	Page
• Added the BQ771825 device to the *Device Comparison Table*	3

Changes from Revision I (July 2020) to Revision J (September 2020)	Page
• Added the BQ771824 device to the *Device Comparison Table*	3
• Added BQ771824 to the *DC Characteristics*	6
• Added BQ771824 delay settings	7

Changes from Revision H (February 2020) to Revision I (July 2020)	Page
• Added the Functional Safety-Capable feature	1
• Added the BQ771823 device to the *Device Comparison Table*	3
• Added BQ771823 to the *DC Characteristics*	6
• Added BQ771823 delay settings to *Section 7.6*	7

Copyright © 2021 Texas Instruments Incorporated

5 Device Comparison Table

T_A	Part Number	Package	Package Designator	OVP (V)	OV Hysteresis (V)	Output Delay	Output Drive	Tape and Reel (Large)	Tape and Reel (Small)
–40°C to 110°C	BQ771800	8-Pin QFN or 8-Pin MSOP	DPJ/DGK	4.300	0.300	4 s	CMOS Active High	BQ771800DPJR	BQ771800DPJT
	BQ771801			4.275	0.050	3 s	NCH Active Low, Open Drain	BQ771801DPJR	BQ771801DPJT
	BQ771802			4.225	0.300	1 s	NCH Active Low, Open Drain	BQ771802DPJR	BQ771802DPJT
	BQ771803			4.275	0.050	1 s	NCH Active Low, Open Drain	BQ771803DPJR	BQ771803DPJT
								BQ771803DGKR(2)	BQ771803DGKT(2)
	BQ771806			4.350	0.300	3 s	CMOS Active High	BQ771806DPJR	BQ771806DPJT
	BQ771807			4.450	0.300	3 s	CMOS Active High	BQ771807DPJR	BQ771807DPJT
	BQ771808			4.200	0.050	1 s	NCH Active Low, Open Drain	BQ771808DPJR	BQ771808DPJT
	BQ771809			4.200	0.050	1 s	CMOS Active High	BQ771809DPJR	BQ771809DPJT
	BQ771811			4.225	0.050	1 s	CMOS Active High	BQ771811DPJR	BQ771811DPJT
	BQ771815			4.225	0.050	1 s	NCH Active Low, Open Drain	BQ771815DPJR	BQ771815DPJT
	BQ771817			4.275	0.050	1 s	CMOS Active High	BQ771817DPJR	BQ771817DPJT
	BQ771818			4.300	0.300	1 s	CMOS Active High	BQ771818DPJR	BQ771818DPJT
								BQ771818DGKR	BQ771818DGKT
	BQ771823			4.275	0.300	3 s	NCH Active Low, Open Drain	BQ771823DPJR	—
	BQ771824			3.850	0.300	4 s	CMOS Active High	BQ771824DPJR	—
	BQ771825			3.950	0.050	3 s	NCH Active Low, Open Drain	BQ771825DPJR	BQ771825DPJT
								BQ771825DGKR(2)	BQ771825DGKT(2)
	BQ7718xy(1)			3.850 – 4.650	Latch, 0.05, 0.25, 0.3	1, 4, 3, 5.5 s	NCH, Active Low, Open Drain, CMOS Active High	BQ7718xyDPJR	BQ7718xyDPJT

(1) Future option. Contact TI for more information.
(2) Contact TI for more information.

Copyright © 2021 Texas Instruments Incorporated

6 Pin Configuration and Functions

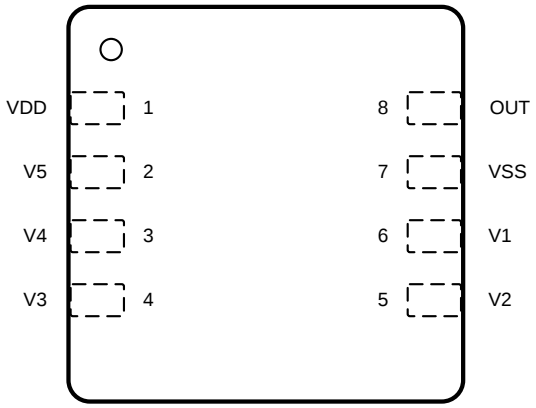

Figure 6-1. DPJ Package 8-Pin (WSON) Top View

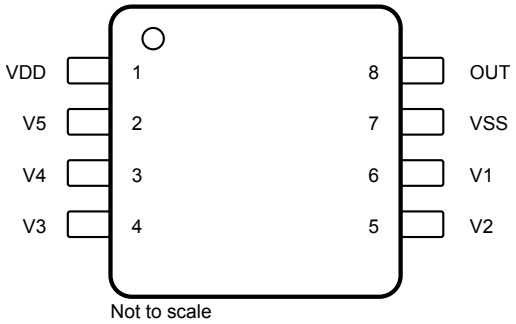

Figure 6-2. DGK Package 8-Pin (PDSO) Top View

Table 6-1. Pin Functions

NO.	NAME	TYPE I/O	DESCRIPTION
1	VDD	P	Power supply
2	V5	I	Sense input for positive voltage of the fifth cell from the bottom of the stack
3	V4	I	Sense input for positive voltage of the fourth cell from the bottom of the stack
4	V3	I	Sense input for positive voltage of the third cell from the bottom of the stack
5	V2	I	Sense input for positive voltage of the second cell from the bottom of the stack
6	V1	I	Sense input for positive voltage of the lowest cell in the stack
7	VSS	P	Electrically connected to IC ground and negative terminal of the lowest cell in the stack
8	OUT	O	Output drive for overvoltage fault signal
O = Output, I = Input, P = Power connection			

Copyright © 2021 Texas Instruments Incorporated

7 Specifications

7.1 Absolute Maximum Ratings

Over-operating free-air temperature range (unless otherwise noted)(1)

		MIN	MAX	UNIT
Supply voltage range	VDD – VSS	–0.3	30	V
Input voltage range	V5 – VSS or V4 – VSS or V3 – VSS or V2 – VSS or V1 – VSS	–0.3	30	V
Output voltage range	OUT – VSS	–0.3	30	V
Continuous total power dissipation, P_{TOT}		See *Section 7.4*.		
Functional temperature		–40	110	°C
Storage temperature range, T_{STG}		–65	150	°C

(1) Stresses beyond those listed under “absolute maximum ratings” may cause permanent damage to the device. These are stress ratings only and functional operation of the device at these or any other conditions beyond those indicated under “recommended operating conditions” is not implied. Exposure to absolute-maximum–rated conditions for extended periods may affect device reliability.

7.2 ESD Ratings

			VALUE	UNIT
$V_{(ESD)}$ Rating	Electrostatic discharge	Human body model (HBM) ESD stress voltage(1)	±2000	V
		Charged device model (CDM) ESD stress voltage(2)	±500	

(1) JEDEC document JEP155 states that 500-V HBM allows safe manufacturing with a standard ESD control process.
(2) JEDEC document JEP157 states that 250-V CDM allows safe manufacturing with a standard ESD control process.

7.3 Recommended Operating Conditions

Over-operating free-air temperature range (unless otherwise noted)

		MIN	MAX	UNIT
Supply voltage, V_{DD} (1)		3	25	V
Input voltage range	V5–V4 or V4–V3 or V3–V2 or V2–V1 or V1–VSS	0	5	V
Operating ambient temperature range, T_A		–40	110	°C

(1) See *Section 9.2*.

7.4 Thermal Information

THERMAL METRIC(1)		BQ7718xy DPJ (WSON) 8 PINS	UNIT
$R_{\theta JA}$	Junction-to-ambient thermal resistance	56.6	°C/W
$R_{\theta JCtop}$	Junction-to-case(top) thermal resistance	56.4	°C/W
$R_{\theta JB}$	Junction-to-board thermal resistance	30.6	°C/W
ψ_{JT}	Junction-to-top characterization parameter	1.0	°C/W
ψ_{JB}	Junction-to-board characterization parameter	37.8	°C/W
$R_{\theta JCbot}$	Junction-to-case(bottom) thermal resistance	11.3	°C/W

(1) For more information about traditional and new thermal metrics, see the *Semiconductor and IC Package Thermal Metrics* application report.

Copyright © 2021 Texas Instruments Incorporated

7.5 DC Characteristics

Typical values stated where T_A = 25°C and V_{DD} = 18 V, MIN/MAX values stated where T_A = –40°C to 110°C and V_{DD} = 3 V to 25 V (unless otherwise noted).

SYMBOL	PARAMETER	CONDITION	MIN	TYP	MAX	UNIT
Voltage Protection Threshold VCx						
V_{OV}	$V_{(PROTECT)}$ Overvoltage Detection	BQ771800		4.300		V
		BQ771801		4.275		V
		BQ771803		4.275		V
		BQ771802		4.225		V
		BQ771806		4.350		V
		BQ771807		4.450		V
		BQ771808		4.200		V
		BQ771809		4.200		V
		BQ771811		4.225		V
		BQ771815		4.225		V
		BQ771817		4.275		V
		BQ771818		4.300		V
		BQ771823		4.275		V
		BQ771824		3.850		V
V_{HYS}	OV Detection Hysteresis	BQ771800	250	300	400	mV
		BQ771801	0	50	100	mV
		BQ771802	250	300	400	mV
		BQ771803	0	50	100	mV
		BQ771806	250	300	400	mV
		BQ771807	250	300	400	mV
		BQ771808	0	50	100	mV
		BQ771809	0	50	100	mV
		BQ771811	0	50	100	mV
		BQ771815	0	50	100	mV
		BQ771817	0	50	100	mV
		BQ771818	250	300	400	mV
		BQ771823	250	300	400	mV
		BQ771824	250	300	400	mV
V_{OA}	OV Detection Accuracy	T_A = 25°C	–10		10	mV
$V_{OADRIFT}$	OV Detection Accuracy Across Temperature	T_A = –40°C	–40		44	mV
		T_A = 0°C	–20		20	mV
		T_A = 60°C	–24		24	mV
		T_A = 110°C	–54		54	mV
Supply and Leakage Current						
I_{CC}	Supply Current	(V5–V4) = (V4–V3) = (V3–V2) = (V2–V1) = (V1–VSS) = 4 V (See Figure 8-2.)		1	2	µA
I_{IN}	Input Current at Vx Pins	(V5–V4) = (V4–V3) = (V3–V2) = (V2–V1) = (V1–VSS) = 4 V (See Figure 8-2.)	–0.1		0.1	µA

Copyright © 2021 Texas Instruments Incorporated

Typical values stated where T_A = 25°C and V_{DD} = 18 V, MIN/MAX values stated where T_A = –40°C to 110°C and V_{DD} = 3 V to 25 V (unless otherwise noted).

SYMBOL	PARAMETER	CONDITION	MIN	TYP	MAX	UNIT
Output Drive OUT, CMOS Active HIGH Versions Only						
V_{OUT1}	Output Drive Voltage, Active High	(V5–V4), (V4–V3), (V3–V2), (V2–V1), or (V1–VSS) > V_{OV}, VDD = 18 V, I_{OH} = 100 µA	6			V
		If three of four cells are short circuited and only one cell remains powered and > V_{OV}, VDD = Vx (cell voltage), I_{OH} = 100 µA		VDD – 0.3		V
		(V5–V4), (V4–V3), (V3–V2), (V2–V1), and (V1–VSS) < V_{OV}, VDD = 18 V, I_{OL} = 100 µA measured into pin		250	400	mV
I_{OUTH1}	OUT Source Current (during OV)	(V5–V4), (V4–V3), (V3–V2), (V2–V1), or (V1–VSS) > V_{OV}, VDD = 18 V. OUT = 0 V. Measured out of OUT pin			4.5	mA
I_{OUTL1}	OUT Sink Current (no OV)	(V5–V4), (V4–V3), (V3–V2), (V2–V1), and (V1–VSS) < V_{OV}, VDD = 18 V, OUT = VDD. Measured into OUT pin	0.5		14	mA
Output Drive OUT, NCH Open Drain Active LOW Versions Only						
V_{OUT2}	Output Drive Voltage, Active Low	(V5–V4), (V4–V3), (V3–V2), (V2–V1), or (V1–VSS) > V_{OV}, VDD = 18 V, I_{OL} = 100 µA measured into OUT pin		250	400	mV
I_{OUTH2}	OUT Sink Current (during OV)	(V5–V4), (V4–V3), (V3–V2), (V2–V1), or (V1–VSS) > V_{OV}, VDD = 18 V. OUT = VDD. Measured into OUT pin	0.5		14	mA
I_{OUTL2}	OUT Source Current (no OV)	(V5–V4), (V4–V3), (V3–V2), (V2–V1), and (V1–VSS) < V_{OV}, VDD = 18 V. OUT = VDD. Measured out of OUT pin			100	nA

7.6 Timing Requirements

			MIN	NOM	MAX	UNIT
Delay Timer						
t_{DELAY}	OV Delay Time	BQ771800, BQ771824	3.2	4	4.8	s
		BQ771801, BQ771807, BQ771823	2.4	3	3.6	s
		BQ771802, BQ771803, BQ771811, BQ771815, BQ771818	0.8	1	1.2	s
		Preview option only. Contact TI.	4.4	5.5	6.6	s
$X_{CTMDELAY}$	Fault Detection Delay Time during Customer Test Mode	See *Section 8.4.3*.		15		ms

Copyright © 2021 Texas Instruments Incorporated

7.7 Typical Characteristics

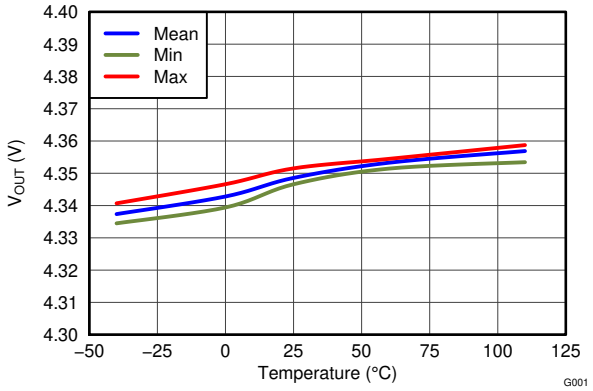

Figure 7-1. Overvoltage Threshold (OVT) vs. Temperature

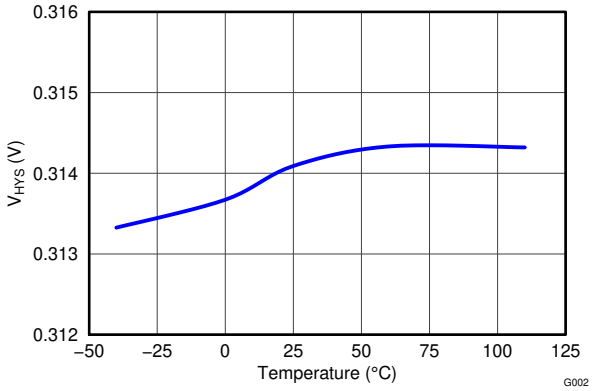

Figure 7-2. Hysteresis V_{HYS} vs. Temperature

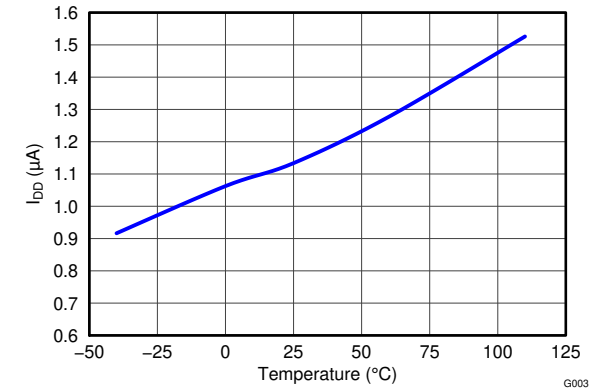

Figure 7-3. I_{DD} Current Consumption vs. Temperature at VDD = 16 V

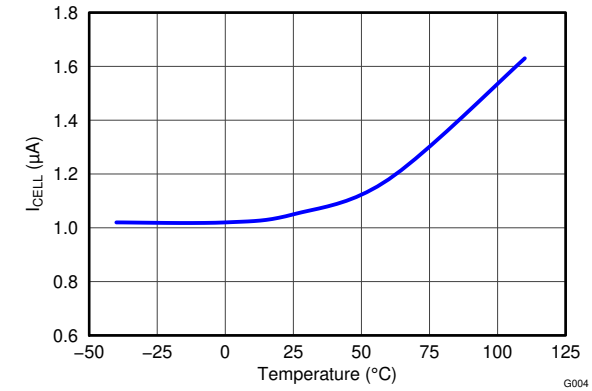

Figure 7-4. I_{CELL} vs. Temperature at V_{CELL}= 9.2 V

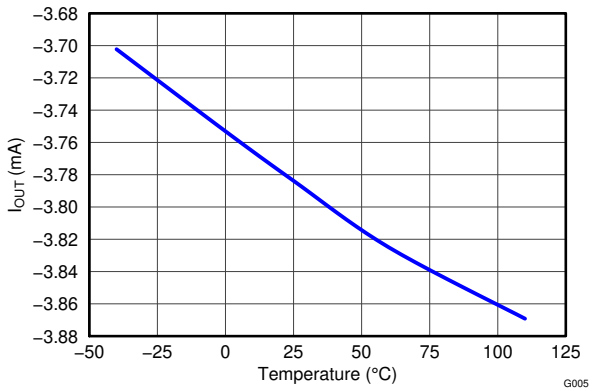

Figure 7-5. Output Current I_{OUT} vs. Temperature

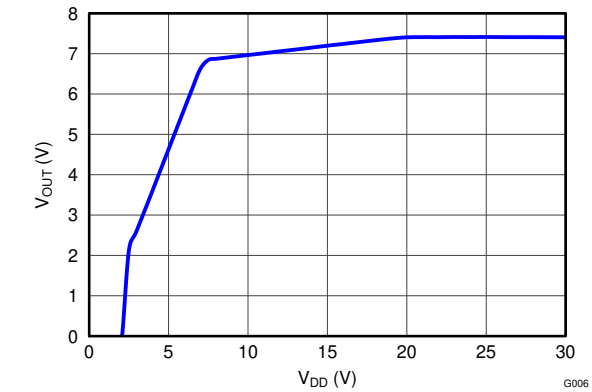

Figure 7-6. V_{OUT} vs. V_{DD}

Copyright © 2021 Texas Instruments Incorporated

8 Detailed Description

8.1 Overview

In the BQ7718xy family of devices, each cell is monitored independently and an external delay timer is initiated if an overvoltage condition is detected on any cell.

For quicker production-line testing, the device provides a Customer Test Mode with greatly reduced delay time.

8.2 Functional Block Diagram

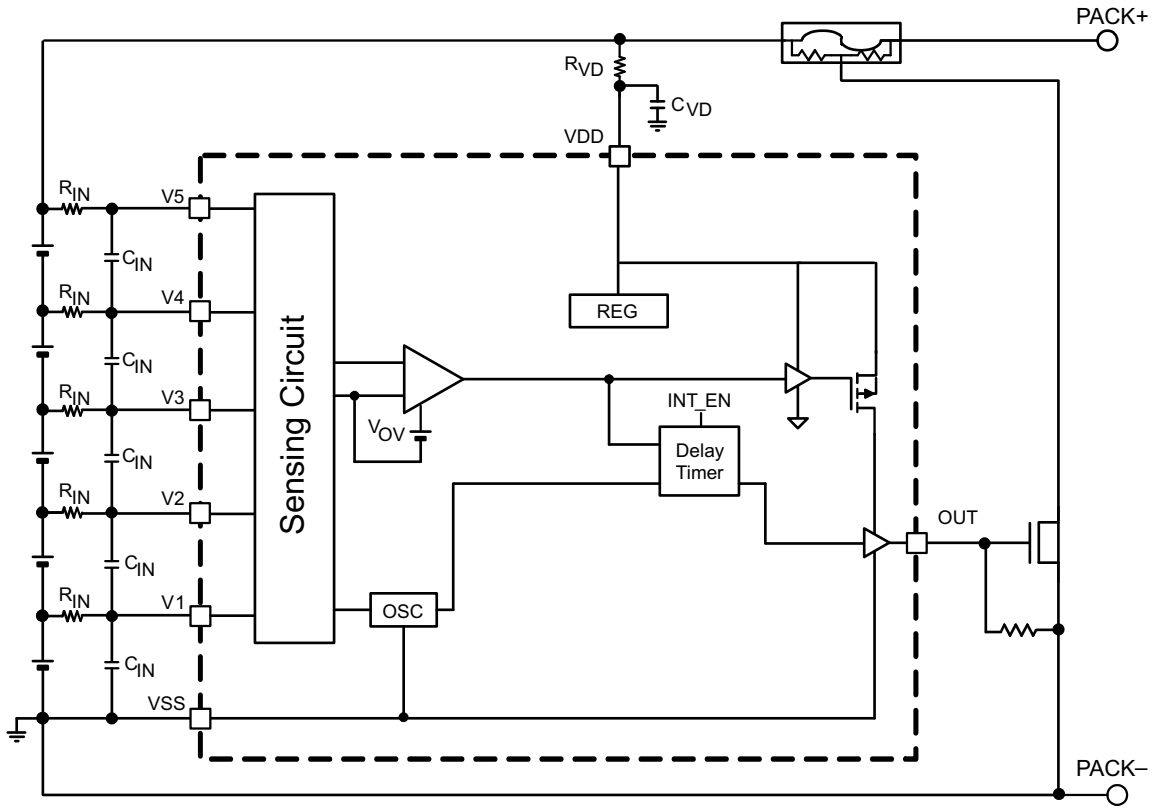

Copyright © 2016, Texas Instruments Incorporated

8.3 Feature Description

In the BQ7718xy device, each cell is monitored independently. Overvoltage is detected by comparing the actual cell voltage to a protection voltage reference, V_{OV}. If any cell voltage exceeds the programmed OV value, a timer circuit is activated. When the timer expires, the OUT pin goes from inactive to active state.

For NCH Open Drain Active Low configurations, the OUT pin pulls down to VSS when active (OV present) and is high impedance when inactive (no OV).

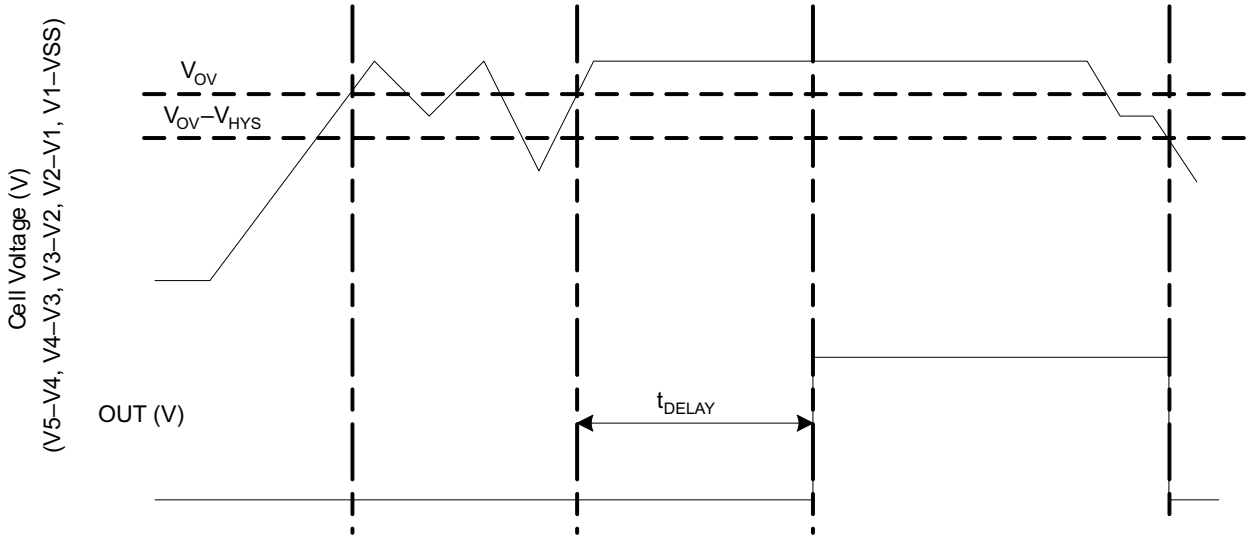

Figure 8-1. Timing for Overvoltage Sensing

8.3.1 Sense Positive Input for Vx

This is an input to sense each single battery cell voltage. A series resistor and a capacitor across the cell for each input is required for noise filtering and stable voltage monitoring.

8.3.2 Output Drive, OUT

This pin serves as the fault signal output, and may be ordered in either active HIGH or LOW options.

8.3.3 Supply Input, VDD

This pin is the unregulated input power source for the IC. A series resistor is connected to limit the current, and a capacitor is connected to ground for noise filtering.

8.4 Device Functional Modes

8.4.1 NORMAL Mode

When all of the cell voltages are below the overvoltage threshold, V_{OV}, the device operates in NORMAL mode. The device monitors the differential cell voltages connected across (V1 – VSS), (V2 – V1), (V3 – V2), (V4 – V3), and (VC4 – VC5). The OUT pin is inactive and if configured:

The OUT pin is inactive and if configured:

- Active high is low.
- Active low is being externally pulled up and is an open drain.

8.4.2 OVERVOLTAGE Mode

OVERVOLTAGE mode is detected if any of the cell voltages exceeds the overvoltage threshold, V_{OV} for configured OV delay time. The OUT pin is activated after a delay time set by the capacitance in the CD pin. The OUT pin will either pull high internally, if configured as active high, or will be pulled low internally, if configured as active low. When all of the cell voltages fall below the (V_{OV} – V_{HYS}), the device returns to NORMAL mode.

8.4.3 Customer Test Mode

Customer Test Mode (CTM) helps to reduce test time for checking the overvoltage delay timer parameter once the circuit is implemented in the battery pack. To enter CTM, VDD should be set to at least 10 V higher than V5 (see Figure 8-2). The delay timer is greater than 10 ms, but considerably shorter than the timer delay in normal operation. To exit Customer Test Mode, remove the VDD to a V5 voltage differential of 10 V so that the decrease in this value automatically causes an exit.

Copyright © 2021 Texas Instruments Incorporated

CAUTION

Avoid exceeding any Absolute Maximum Voltages on any pins when placing the part into Customer Test Mode. Also avoid exceeding Absolute Maximum Voltages for the individual cell voltages (V5–V4), (V4–V3), (V4–V3), (V3–V2), (V2–V1), and (V1–VSS). Stressing the pins beyond the rated limits may cause permanent damage to the device.

Figure 8-2 shows the timing for the Customer Test Mode.

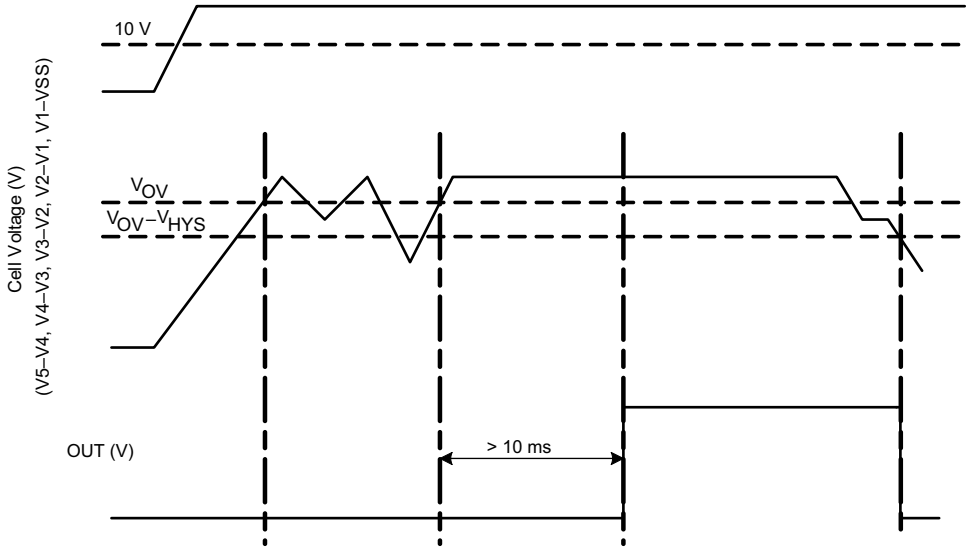

Figure 8-2. Timing for Customer Test Mode

9 Application and Implementation

Note

Information in the following applications sections is not part of the TI component specification, and TI does not warrant its accuracy or completeness. TI's customers are responsible for determining suitability of components for their purposes. Customers should validate and test their design implementation to confirm system functionality.

9.1 Application Information

In the case of an Open Drain Active Low configuration, an external pull-up resistor is required on the OUT pin. Changes to the ranges stated in Table 9-1 will impact the accuracy of the cell measurements.

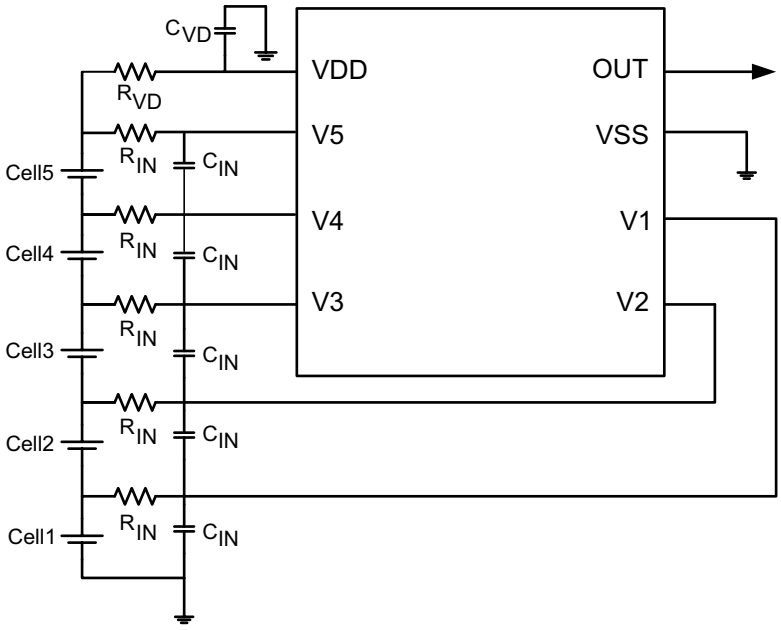

Copyright © 2016, Texas Instruments Incorporated

Figure 9-1. Application Configuration

9.1.1 Design Requirements

Changes to the ranges stated in Table 9-1 will impact the accuracy of the cell measurements. Figure 9-1 shows each external component.

Table 9-1. Parameters

PARAMETER	EXTERNAL COMPONENT	MIN	NOM	MAX	UNIT
Voltage monitor filter resistance	R_{IN}	900	1000	1100	Ω
Voltage monitor filter capacitance	C_{IN}	0.01		0.1	µF
Supply voltage filter resistance	R_{VD}	100		1K	Ω
Supply voltage filter capacitance	C_{VD}		0.1		µF
CD external delay capacitance			0.1	1	µF
OUT Open drain version pull-up resistance to PACK+			100		kΩ

Copyright © 2021 Texas Instruments Incorporated

Note

The device is calibrated using an R_{IN} value = 1 kΩ. Using a value other than this recommended value changes the accuracy of the cell voltage measurements and V_{OV} trigger level.

9.1.2 Detailed Design Procedure

Figure 9-2 shows the measurement for current consumption for the product for both VDD and Vx.

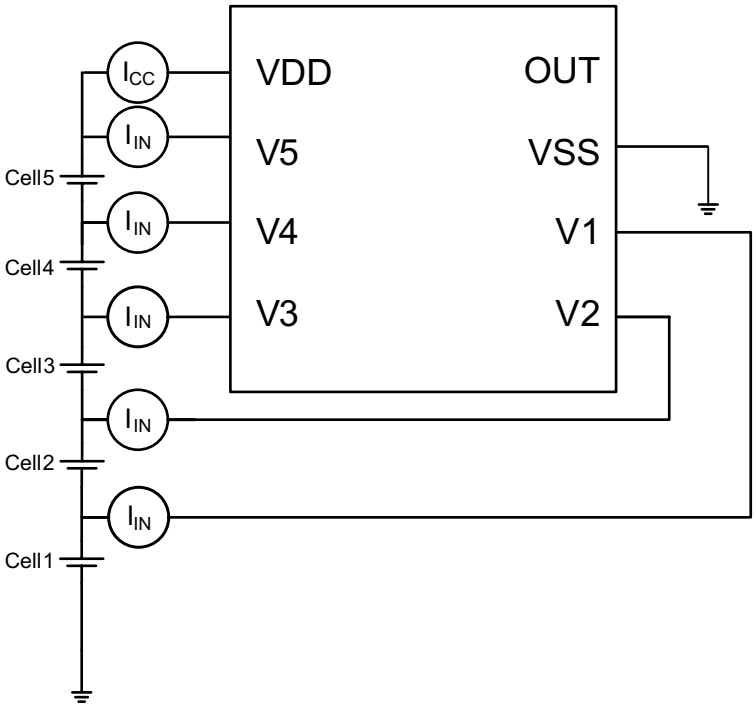

Copyright © 2016, Texas Instruments Incorporated

Figure 9-2. Configuration for IC Current Consumption Test

9.1.2.1 Application Curves

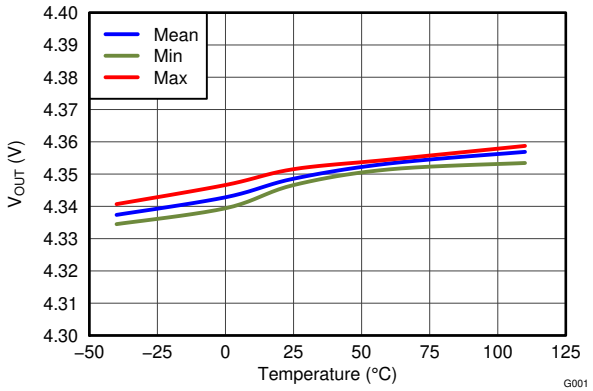

Figure 9-3. Overvoltage Threshold (OVT) vs. Temperature

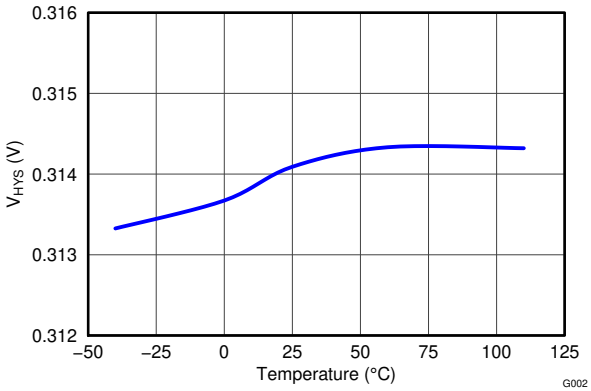

Figure 9-4. Hysteresis V_{HYS} vs. Temperature

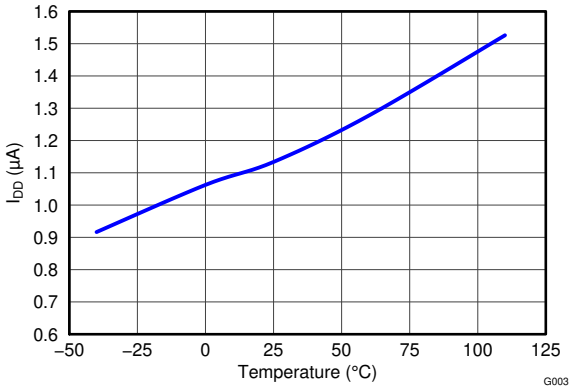

Figure 9-5. I_{DD} Current Consumption vs. Temperature at VDD = 16 V

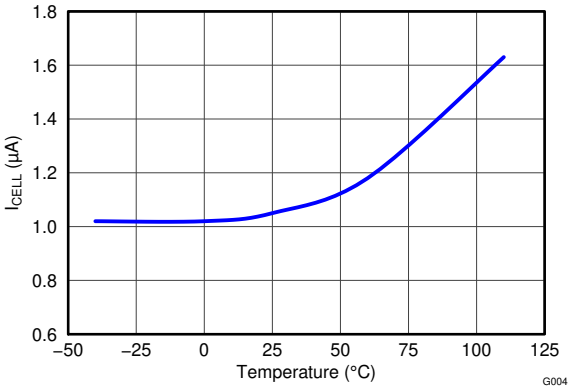

Figure 9-6. I_{CELL} vs. Temperature at V_{CELL}= 9.2 V

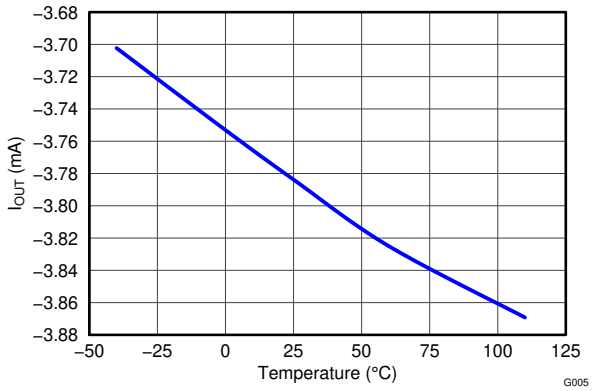

Figure 9-7. Output Current I_{OUT} vs. Temperature

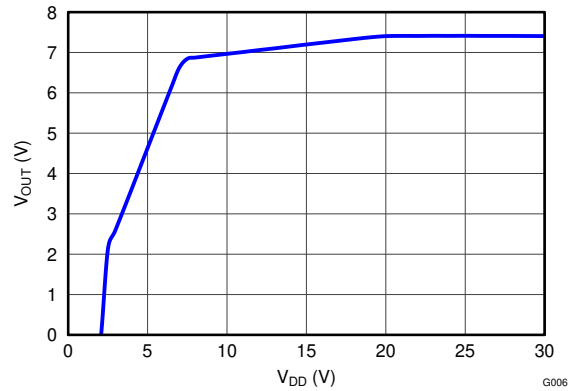

Figure 9-8. V_{OUT} vs. V_{DD}

Copyright © 2021 Texas Instruments Incorporated

9.2 Systems Examples

In these application examples, an external pull-up resistor is required on the OUT pin to configure for an Open Drain Active Low operation.

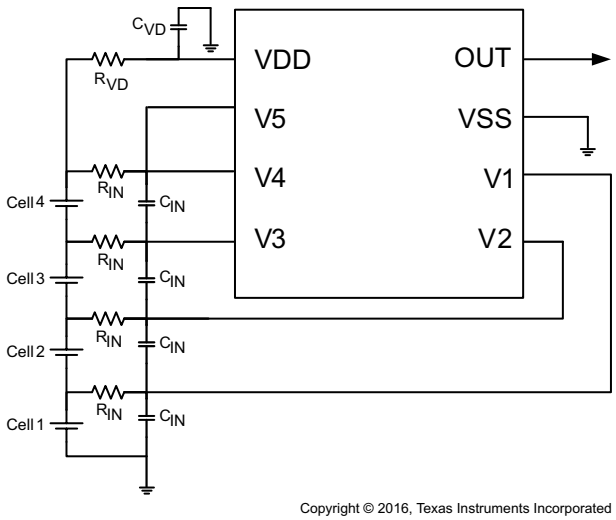

Figure 9-9. 4-Series Cell Configuration

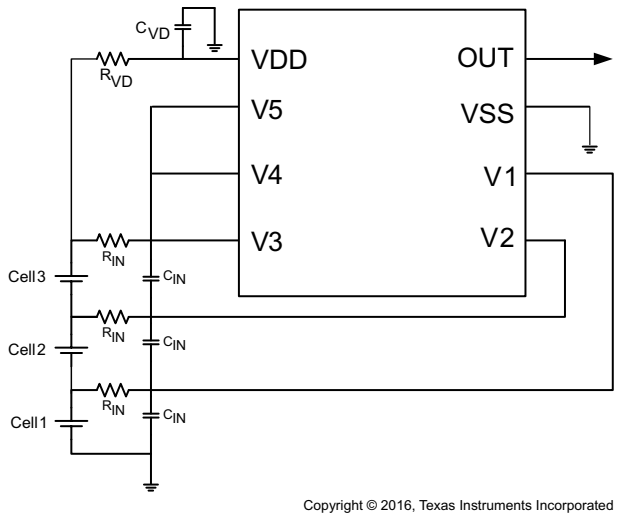

Figure 9-10. 3-Series Cell Configuration with Fixed Delay

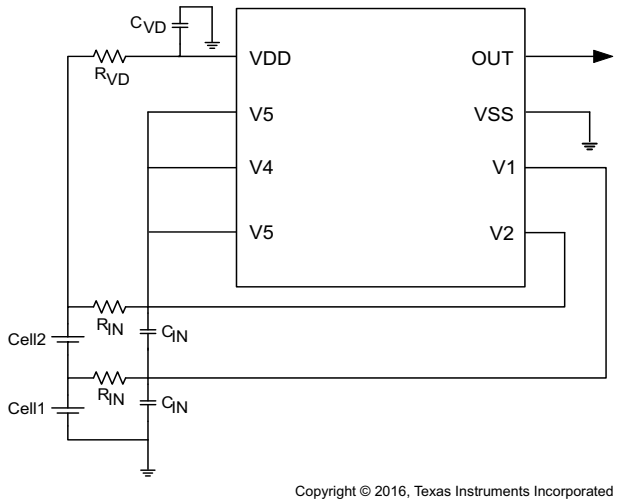

Figure 9-11. 2-Series Cell Configuration with Internal Fixed Delay

10 Power Supply Recommendations

The maximum power of this device is 25 V on VDD.

11 Layout

11.1 Layout Guidelines

- Ensure the RC filters for the V1 and VDD pins are placed as close as possible to the target terminal.
- The VSS pin should be routed to the CELL– terminal.

11.2 Layout Example

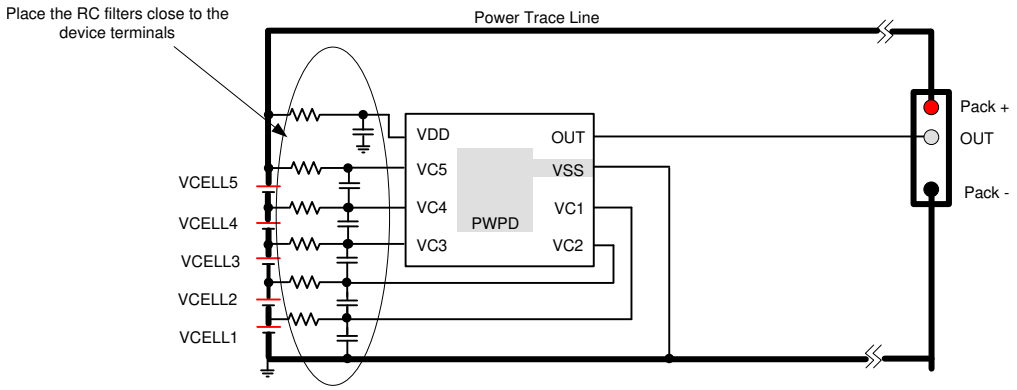

Figure 11-1. Example Layout

Copyright © 2021 Texas Instruments Incorporated

12 Device and Documentation Support

12.1 Documentation Support

For additional information, see the BQ7718 technical documentation, including the documentation available to aid functional safety system design.

12.2 Third-Party Products Disclaimer

TI'S PUBLICATION OF INFORMATION REGARDING THIRD-PARTY PRODUCTS OR SERVICES DOES NOT CONSTITUTE AN ENDORSEMENT REGARDING THE SUITABILITY OF SUCH PRODUCTS OR SERVICES OR A WARRANTY, REPRESENTATION OR ENDORSEMENT OF SUCH PRODUCTS OR SERVICES, EITHER ALONE OR IN COMBINATION WITH ANY TI PRODUCT OR SERVICE.

12.3 Receiving Notification of Documentation Updates

To receive notification of documentation updates, navigate to the device product folder on ti.com. Click on *Subscribe to updates* to register and receive a weekly digest of any product information that has changed. For change details, review the revision history included in any revised document.

12.4 Support Resources

TI E2E™ support forums are an engineer's go-to source for fast, verified answers and design help — straight from the experts. Search existing answers or ask your own question to get the quick design help you need.

Linked content is provided "AS IS" by the respective contributors. They do not constitute TI specifications and do not necessarily reflect TI's views; see TI's Terms of Use.

12.5 Trademarks

TI E2E™ is a trademark of Texas Instruments.
All trademarks are the property of their respective owners.

12.6 Electrostatic Discharge Caution



This integrated circuit can be damaged by ESD. Texas Instruments recommends that all integrated circuits be handled with appropriate precautions. Failure to observe proper handling and installation procedures can cause damage.

ESD damage can range from subtle performance degradation to complete device failure. Precision integrated circuits may be more susceptible to damage because very small parametric changes could cause the device not to meet its published specifications.

12.7 Glossary

TI Glossary	This glossary lists and explains terms, acronyms, and definitions.

13 Mechanical, Packaging, and Orderable Information

The following pages include mechanical, packaging, and orderable information. This information is the most current data available for the designated devices. This data is subject to change without notice and revision of this document. For browser-based versions of this data sheet, refer to the left-hand navigation.

Copyright © 2021 Texas Instruments Incorporated

PACKAGING INFORMATION

Orderable part number	Status (1)	Material type (2)	Package | Pins	Package qty | Carrier	RoHS (3)	Lead finish/ Ball material (4)	MSL rating/ Peak reflow (5)	Op temp (°C)	Part marking (6)
BQ771800DPJR	Active	Production	WSON (DPJ) | 8	3000 | LARGE T&R	Yes	NIPDAU | SN	Level-1-260C-UNLIM	-40 to 85	771800
BQ771800DPJR.A	Active	Production	WSON (DPJ) | 8	3000 | LARGE T&R	Yes	NIPDAU	Level-1-260C-UNLIM	-40 to 85	771800
BQ771800DPJT	Active	Production	WSON (DPJ) | 8	250 | SMALL T&R	Yes	NIPDAU | SN	Level-1-260C-UNLIM	-40 to 85	771800
BQ771800DPJT.A	Active	Production	WSON (DPJ) | 8	250 | SMALL T&R	Yes	NIPDAU	Level-1-260C-UNLIM	-40 to 85	771800
BQ771801DPJR	Active	Production	WSON (DPJ) | 8	3000 | LARGE T&R	Yes	NIPDAU	Level-1-260C-UNLIM	-40 to 85	771801
BQ771801DPJR.A	Active	Production	WSON (DPJ) | 8	3000 | LARGE T&R	Yes	NIPDAU	Level-1-260C-UNLIM	-40 to 85	771801
BQ771801DPJT	Active	Production	WSON (DPJ) | 8	250 | SMALL T&R	Yes	NIPDAU	Level-1-260C-UNLIM	-40 to 85	771801
BQ771801DPJT.A	Active	Production	WSON (DPJ) | 8	250 | SMALL T&R	Yes	NIPDAU	Level-1-260C-UNLIM	-40 to 85	771801
BQ771802DPJR	Active	Production	WSON (DPJ) | 8	3000 | LARGE T&R	Yes	NIPDAU | SN	Level-1-260C-UNLIM	-40 to 85	771802
BQ771802DPJR.A	Active	Production	WSON (DPJ) | 8	3000 | LARGE T&R	Yes	NIPDAU	Level-1-260C-UNLIM	-40 to 85	771802
BQ771802DPJT	Active	Production	WSON (DPJ) | 8	250 | SMALL T&R	Yes	NIPDAU | SN	Level-1-260C-UNLIM	-40 to 85	771802
BQ771802DPJT.A	Active	Production	WSON (DPJ) | 8	250 | SMALL T&R	Yes	NIPDAU	Level-1-260C-UNLIM	-40 to 85	771802
BQ771803DPJR	Active	Production	WSON (DPJ) | 8	3000 | LARGE T&R	Yes	NIPDAU | SN	Level-1-260C-UNLIM	-40 to 85	771803
BQ771803DPJR.A	Active	Production	WSON (DPJ) | 8	3000 | LARGE T&R	Yes	NIPDAU	Level-1-260C-UNLIM	-40 to 85	771803
BQ771803DPJT	Active	Production	WSON (DPJ) | 8	250 | SMALL T&R	Yes	NIPDAU | SN	Level-1-260C-UNLIM	-40 to 85	771803
BQ771803DPJT.A	Active	Production	WSON (DPJ) | 8	250 | SMALL T&R	Yes	NIPDAU	Level-1-260C-UNLIM	-40 to 85	771803
BQ771806DPJR	Active	Production	WSON (DPJ) | 8	3000 | LARGE T&R	Yes	NIPDAU | SN	Level-1-260C-UNLIM	-40 to 85	771806
BQ771806DPJR.A	Active	Production	WSON (DPJ) | 8	3000 | LARGE T&R	Yes	NIPDAU	Level-1-260C-UNLIM	-40 to 85	771806
BQ771806DPJT	Active	Production	WSON (DPJ) | 8	250 | SMALL T&R	Yes	NIPDAU | SN	Level-1-260C-UNLIM	-40 to 85	771806
BQ771806DPJT.A	Active	Production	WSON (DPJ) | 8	250 | SMALL T&R	Yes	NIPDAU	Level-1-260C-UNLIM	-40 to 85	771806
BQ771807DPJR	Active	Production	WSON (DPJ) | 8	3000 | LARGE T&R	Yes	NIPDAU	Level-1-260C-UNLIM	-40 to 85	771807
BQ771807DPJR.A	Active	Production	WSON (DPJ) | 8	3000 | LARGE T&R	Yes	NIPDAU	Level-1-260C-UNLIM	-40 to 85	771807
BQ771807DPJT	Active	Production	WSON (DPJ) | 8	250 | SMALL T&R	Yes	NIPDAU	Level-1-260C-UNLIM	-40 to 85	771807
BQ771807DPJT.A	Active	Production	WSON (DPJ) | 8	250 | SMALL T&R	Yes	NIPDAU	Level-1-260C-UNLIM	-40 to 85	771807
BQ771808DPJR	Active	Production	WSON (DPJ) | 8	3000 | LARGE T&R	Yes	NIPDAU | SN	Level-1-260C-UNLIM	-40 to 85	771808
BQ771808DPJR.A	Active	Production	WSON (DPJ) | 8	3000 | LARGE T&R	Yes	NIPDAU	Level-1-260C-UNLIM	-40 to 85	771808
BQ771808DPJT	Active	Production	WSON (DPJ) | 8	250 | SMALL T&R	Yes	NIPDAU | SN	Level-1-260C-UNLIM	-40 to 85	771808
BQ771808DPJT.A	Active	Production	WSON (DPJ) | 8	250 | SMALL T&R	Yes	NIPDAU	Level-1-260C-UNLIM	-40 to 85	771808
BQ771809DPJR	Active	Production	WSON (DPJ) | 8	3000 | LARGE T&R	Yes	NIPDAU | SN	Level-1-260C-UNLIM	-40 to 85	771809

Orderable part number	Status (1)	Material type (2)	Package | Pins	Package qty | Carrier	RoHS (3)	Lead finish/ Ball material (4)	MSL rating/ Peak reflow (5)	Op temp (°C)	Part marking (6)
BQ771809DPJR.A	Active	Production	WSON (DPJ) | 8	3000 | LARGE T&R	Yes	NIPDAU	Level-1-260C-UNLIM	-40 to 85	771809
BQ771809DPJT	Active	Production	WSON (DPJ) | 8	250 | SMALL T&R	Yes	NIPDAU | SN	Level-1-260C-UNLIM	-40 to 85	771809
BQ771809DPJT.A	Active	Production	WSON (DPJ) | 8	250 | SMALL T&R	Yes	NIPDAU	Level-1-260C-UNLIM	-40 to 85	771809
BQ771811DPJR	Active	Production	WSON (DPJ) | 8	3000 | LARGE T&R	Yes	NIPDAU | SN	Level-1-260C-UNLIM	-40 to 85	771811
BQ771811DPJR.A	Active	Production	WSON (DPJ) | 8	3000 | LARGE T&R	Yes	NIPDAU	Level-1-260C-UNLIM	-40 to 85	771811
BQ771811DPJT	Active	Production	WSON (DPJ) | 8	250 | SMALL T&R	Yes	NIPDAU | SN	Level-1-260C-UNLIM	-40 to 85	771811
BQ771811DPJT.A	Active	Production	WSON (DPJ) | 8	250 | SMALL T&R	Yes	NIPDAU	Level-1-260C-UNLIM	-40 to 85	771811
BQ771815DPJR	Active	Production	WSON (DPJ) | 8	3000 | LARGE T&R	Yes	NIPDAU | SN	Level-1-260C-UNLIM	-40 to 85	771815
BQ771815DPJR.A	Active	Production	WSON (DPJ) | 8	3000 | LARGE T&R	Yes	NIPDAU	Level-1-260C-UNLIM	-40 to 85	771815
BQ771815DPJT	Active	Production	WSON (DPJ) | 8	250 | SMALL T&R	Yes	NIPDAU | SN	Level-1-260C-UNLIM	-40 to 85	771815
BQ771815DPJT.A	Active	Production	WSON (DPJ) | 8	250 | SMALL T&R	Yes	NIPDAU	Level-1-260C-UNLIM	-40 to 85	771815
BQ771817DPJR	Active	Production	WSON (DPJ) | 8	3000 | LARGE T&R	Yes	NIPDAU | SN	Level-1-260C-UNLIM	-40 to 85	771817
BQ771817DPJR.A	Active	Production	WSON (DPJ) | 8	3000 | LARGE T&R	Yes	NIPDAU	Level-1-260C-UNLIM	-40 to 85	771817
BQ771817DPJT	Active	Production	WSON (DPJ) | 8	250 | SMALL T&R	Yes	NIPDAU | SN	Level-1-260C-UNLIM	-40 to 85	771817
BQ771817DPJT.A	Active	Production	WSON (DPJ) | 8	250 | SMALL T&R	Yes	NIPDAU	Level-1-260C-UNLIM	-40 to 85	771817
BQ771818DPJR	Active	Production	WSON (DPJ) | 8	3000 | LARGE T&R	Yes	NIPDAU | SN	Level-1-260C-UNLIM	-40 to 85	771818
BQ771818DPJR.A	Active	Production	WSON (DPJ) | 8	3000 | LARGE T&R	Yes	NIPDAU	Level-1-260C-UNLIM	-40 to 85	771818
BQ771818DPJT	Active	Production	WSON (DPJ) | 8	250 | SMALL T&R	Yes	NIPDAU | SN	Level-1-260C-UNLIM	-40 to 85	771818
BQ771818DPJT.A	Active	Production	WSON (DPJ) | 8	250 | SMALL T&R	Yes	NIPDAU	Level-1-260C-UNLIM	-40 to 85	771818
BQ771823DPJR	Active	Production	WSON (DPJ) | 8	3000 | LARGE T&R	Yes	SN	Level-1-260C-UNLIM	-40 to 110	771823
BQ771823DPJR.A	Active	Production	WSON (DPJ) | 8	3000 | LARGE T&R	Yes	SN	Level-1-260C-UNLIM	-40 to 110	771823
BQ771824DPJR	Active	Production	WSON (DPJ) | 8	3000 | LARGE T&R	Yes	SN	Level-1-260C-UNLIM	-40 to 110	771824
BQ771824DPJR.A	Active	Production	WSON (DPJ) | 8	3000 | LARGE T&R	Yes	SN	Level-1-260C-UNLIM	-40 to 110	771824
BQ771824DPJRG4	Active	Production	WSON (DPJ) | 8	3000 | LARGE T&R	Yes	NIPDAU	Level-1-260C-UNLIM	-40 to 110	771824
BQ771824DPJRG4.A	Active	Production	WSON (DPJ) | 8	3000 | LARGE T&R	Yes	NIPDAU	Level-1-260C-UNLIM	-40 to 110	771824
BQ771825DPJR	Active	Production	WSON (DPJ) | 8	3000 | LARGE T&R	Yes	SN	Level-1-260C-UNLIM	-40 to 85	771825
BQ771825DPJR.A	Active	Production	WSON (DPJ) | 8	3000 | LARGE T&R	Yes	SN	Level-1-260C-UNLIM	-40 to 85	771825
BQ771825DPJRG4	Active	Production	WSON (DPJ) | 8	3000 | LARGE T&R	Yes	NIPDAU	Level-1-260C-UNLIM	-40 to 110	771825
BQ771825DPJRG4.A	Active	Production	WSON (DPJ) | 8	3000 | LARGE T&R	Yes	NIPDAU	Level-1-260C-UNLIM	-40 to 110	771825

(1) **Status:** For more details on status, see our product life cycle.

(2) **Material type:** When designated, preproduction parts are prototypes/experimental devices, and are not yet approved or released for full production. Testing and final process, including without limitation quality assurance, reliability performance testing, and/or process qualification, may not yet be complete, and this item is subject to further changes or possible discontinuation. If available for ordering, purchases will be subject to an additional waiver at checkout, and are intended for early internal evaluation purposes only. These items are sold without warranties of any kind.

(3) **RoHS values:** Yes, No, RoHS Exempt. See the TI RoHS Statement for additional information and value definition.

(4) **Lead finish/Ball material:** Parts may have multiple material finish options. Finish options are separated by a vertical ruled line. Lead finish/Ball material values may wrap to two lines if the finish value exceeds the maximum column width.

(5) **MSL rating/Peak reflow:** The moisture sensitivity level ratings and peak solder (reflow) temperatures. In the event that a part has multiple moisture sensitivity ratings, only the lowest level per JEDEC standards is shown. Refer to the shipping label for the actual reflow temperature that will be used to mount the part to the printed circuit board.

(6) **Part marking:** There may be an additional marking, which relates to the logo, the lot trace code information, or the environmental category of the part.

Multiple part markings will be inside parentheses. Only one part marking contained in parentheses and separated by a "~" will appear on a part. If a line is indented then it is a continuation of the previous line and the two combined represent the entire part marking for that device.

Important Information and Disclaimer: The information provided on this page represents TI's knowledge and belief as of the date that it is provided. TI bases its knowledge and belief on information provided by third parties, and makes no representation or warranty as to the accuracy of such information. Efforts are underway to better integrate information from third parties. TI has taken and continues to take reasonable steps to provide representative and accurate information but may not have conducted destructive testing or chemical analysis on incoming materials and chemicals. TI and TI suppliers consider certain information to be proprietary, and thus CAS numbers and other limited information may not be available for release.

In no event shall TI's liability arising out of such information exceed the total purchase price of the TI part(s) at issue in this document sold by TI to Customer on an annual basis.

TAPE AND REEL INFORMATION

REEL DIMENSIONS

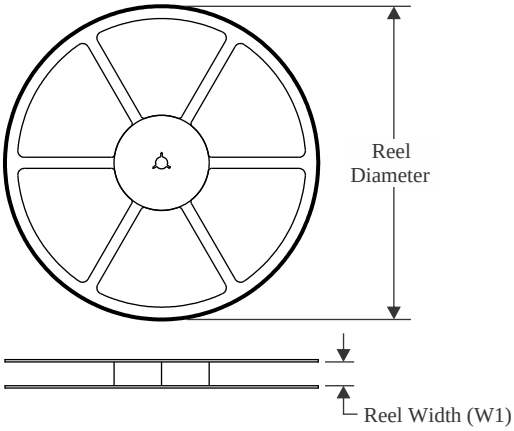

TAPE DIMENSIONS

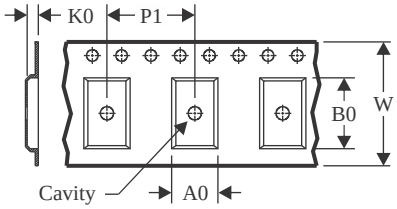

A0	Dimension designed to accommodate the component width
B0	Dimension designed to accommodate the component length
K0	Dimension designed to accommodate the component thickness
W	Overall width of the carrier tape
P1	Pitch between successive cavity centers

QUADRANT ASSIGNMENTS FOR PIN 1 ORIENTATION IN TAPE

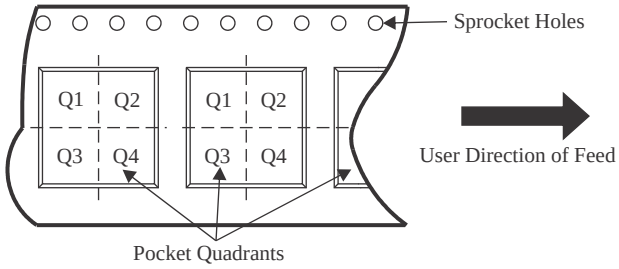

*All dimensions are nominal

Device	Package Type	Package Drawing	Pins	SPQ	Reel Diameter (mm)	Reel Width W1 (mm)	A0 (mm)	B0 (mm)	K0 (mm)	P1 (mm)	W (mm)	Pin1 Quadrant
BQ771800DPJR	WSON	DPJ	8	3000	330.0	12.4	3.3	4.3	1.1	8.0	12.0	Q2
BQ771800DPJT	WSON	DPJ	8	250	180.0	12.4	3.3	4.3	1.1	8.0	12.0	Q2
BQ771801DPJR	WSON	DPJ	8	3000	330.0	12.4	3.3	4.3	1.1	8.0	12.0	Q2
BQ771801DPJT	WSON	DPJ	8	250	180.0	12.4	3.3	4.3	1.1	8.0	12.0	Q2
BQ771802DPJR	WSON	DPJ	8	3000	330.0	12.4	3.3	4.3	1.1	8.0	12.0	Q2
BQ771802DPJR	WSON	DPJ	8	3000	330.0	12.4	3.3	4.3	1.1	8.0	12.0	Q2
BQ771802DPJT	WSON	DPJ	8	250	180.0	12.4	3.3	4.3	1.1	8.0	12.0	Q2
BQ771803DPJR	WSON	DPJ	8	3000	330.0	12.4	3.3	4.3	1.1	8.0	12.0	Q2
BQ771803DPJR	WSON	DPJ	8	3000	330.0	12.4	3.3	4.3	1.1	8.0	12.0	Q2
BQ771803DPJT	WSON	DPJ	8	250	180.0	12.4	3.3	4.3	1.1	8.0	12.0	Q2
BQ771806DPJR	WSON	DPJ	8	3000	330.0	12.4	3.3	4.3	1.1	8.0	12.0	Q2
BQ771806DPJT	WSON	DPJ	8	250	180.0	12.4	3.3	4.3	1.1	8.0	12.0	Q2
BQ771807DPJR	WSON	DPJ	8	3000	330.0	12.4	3.3	4.3	1.1	8.0	12.0	Q2
BQ771807DPJT	WSON	DPJ	8	250	180.0	12.4	3.3	4.3	1.1	8.0	12.0	Q2
BQ771808DPJR	WSON	DPJ	8	3000	330.0	12.4	3.3	4.3	1.1	8.0	12.0	Q2
BQ771808DPJT	WSON	DPJ	8	250	180.0	12.4	3.3	4.3	1.1	8.0	12.0	Q2

Device	Package Type	Package Drawing	Pins	SPQ	Reel Diameter (mm)	Reel Width W1 (mm)	A0 (mm)	B0 (mm)	K0 (mm)	P1 (mm)	W (mm)	Pin1 Quadrant
BQ771809DPJR	WSON	DPJ	8	3000	330.0	12.4	3.3	4.3	1.1	8.0	12.0	Q2
BQ771809DPJT	WSON	DPJ	8	250	180.0	12.4	3.3	4.3	1.1	8.0	12.0	Q2
BQ771811DPJR	WSON	DPJ	8	3000	330.0	12.4	3.3	4.3	1.1	8.0	12.0	Q2
BQ771811DPJT	WSON	DPJ	8	250	180.0	12.4	3.3	4.3	1.1	8.0	12.0	Q2
BQ771815DPJR	WSON	DPJ	8	3000	330.0	12.4	3.3	4.3	1.1	8.0	12.0	Q2
BQ771815DPJT	WSON	DPJ	8	250	180.0	12.4	3.3	4.3	1.1	8.0	12.0	Q2
BQ771817DPJR	WSON	DPJ	8	3000	330.0	12.4	3.3	4.3	1.1	8.0	12.0	Q2
BQ771817DPJR	WSON	DPJ	8	3000	330.0	12.4	3.3	4.3	1.1	8.0	12.0	Q2
BQ771817DPJT	WSON	DPJ	8	250	180.0	12.4	3.3	4.3	1.1	8.0	12.0	Q2
BQ771818DPJR	WSON	DPJ	8	3000	330.0	12.4	3.3	4.3	1.1	8.0	12.0	Q2
BQ771818DPJR	WSON	DPJ	8	3000	330.0	12.4	3.3	4.3	1.1	8.0	12.0	Q2
BQ771818DPJT	WSON	DPJ	8	250	180.0	12.4	3.3	4.3	1.1	8.0	12.0	Q2
BQ771823DPJR	WSON	DPJ	8	3000	330.0	12.4	3.3	4.3	1.1	8.0	12.0	Q2
BQ771824DPJR	WSON	DPJ	8	3000	330.0	12.4	3.3	4.3	1.1	8.0	12.0	Q2
BQ771824DPJRG4	WSON	DPJ	8	3000	330.0	12.4	3.3	4.3	1.1	8.0	12.0	Q2
BQ771825DPJR	WSON	DPJ	8	3000	330.0	12.4	3.3	4.3	1.1	8.0	12.0	Q2
BQ771825DPJRG4	WSON	DPJ	8	3000	330.0	12.4	3.3	4.3	1.1	8.0	12.0	Q2

TAPE AND REEL BOX DIMENSIONS

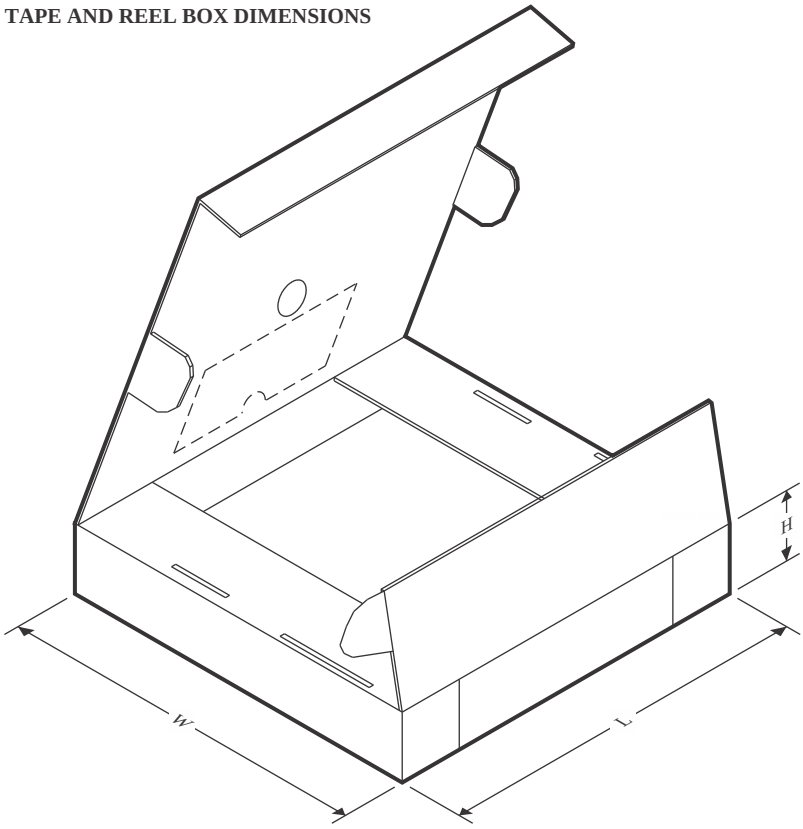

*All dimensions are nominal

Device	Package Type	Package Drawing	Pins	SPQ	Length (mm)	Width (mm)	Height (mm)
BQ771800DPJR	WSON	DPJ	8	3000	335.0	335.0	25.0
BQ771800DPJT	WSON	DPJ	8	250	182.0	182.0	20.0
BQ771801DPJR	WSON	DPJ	8	3000	335.0	335.0	25.0
BQ771801DPJT	WSON	DPJ	8	250	182.0	182.0	20.0
BQ771802DPJR	WSON	DPJ	8	3000	335.0	335.0	25.0
BQ771802DPJR	WSON	DPJ	8	3000	367.0	367.0	35.0
BQ771802DPJT	WSON	DPJ	8	250	182.0	182.0	20.0
BQ771803DPJR	WSON	DPJ	8	3000	367.0	367.0	35.0
BQ771803DPJR	WSON	DPJ	8	3000	335.0	335.0	25.0
BQ771803DPJT	WSON	DPJ	8	250	182.0	182.0	20.0
BQ771806DPJR	WSON	DPJ	8	3000	335.0	335.0	25.0
BQ771806DPJT	WSON	DPJ	8	250	182.0	182.0	20.0
BQ771807DPJR	WSON	DPJ	8	3000	335.0	335.0	25.0
BQ771807DPJT	WSON	DPJ	8	250	182.0	182.0	20.0
BQ771808DPJR	WSON	DPJ	8	3000	335.0	335.0	25.0
BQ771808DPJT	WSON	DPJ	8	250	182.0	182.0	20.0
BQ771809DPJR	WSON	DPJ	8	3000	335.0	335.0	25.0
BQ771809DPJT	WSON	DPJ	8	250	182.0	182.0	20.0

Device	Package Type	Package Drawing	Pins	SPQ	Length (mm)	Width (mm)	Height (mm)
BQ771811DPJR	WSON	DPJ	8	3000	335.0	335.0	25.0
BQ771811DPJT	WSON	DPJ	8	250	182.0	182.0	20.0
BQ771815DPJR	WSON	DPJ	8	3000	335.0	335.0	25.0
BQ771815DPJT	WSON	DPJ	8	250	182.0	182.0	20.0
BQ771817DPJR	WSON	DPJ	8	3000	367.0	367.0	35.0
BQ771817DPJR	WSON	DPJ	8	3000	335.0	335.0	25.0
BQ771817DPJT	WSON	DPJ	8	250	182.0	182.0	20.0
BQ771818DPJR	WSON	DPJ	8	3000	367.0	367.0	35.0
BQ771818DPJR	WSON	DPJ	8	3000	346.0	346.0	33.0
BQ771818DPJT	WSON	DPJ	8	250	210.0	185.0	35.0
BQ771823DPJR	WSON	DPJ	8	3000	367.0	367.0	35.0
BQ771824DPJR	WSON	DPJ	8	3000	367.0	367.0	35.0
BQ771824DPJRG4	WSON	DPJ	8	3000	367.0	367.0	35.0
BQ771825DPJR	WSON	DPJ	8	3000	367.0	367.0	35.0
BQ771825DPJRG4	WSON	DPJ	8	3000	367.0	367.0	35.0

PACKAGE OUTLINE

DPJ0008A

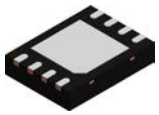

WSON - 0.8 mm max height

PLASTIC SMALL OUTLINE - NO LEAD

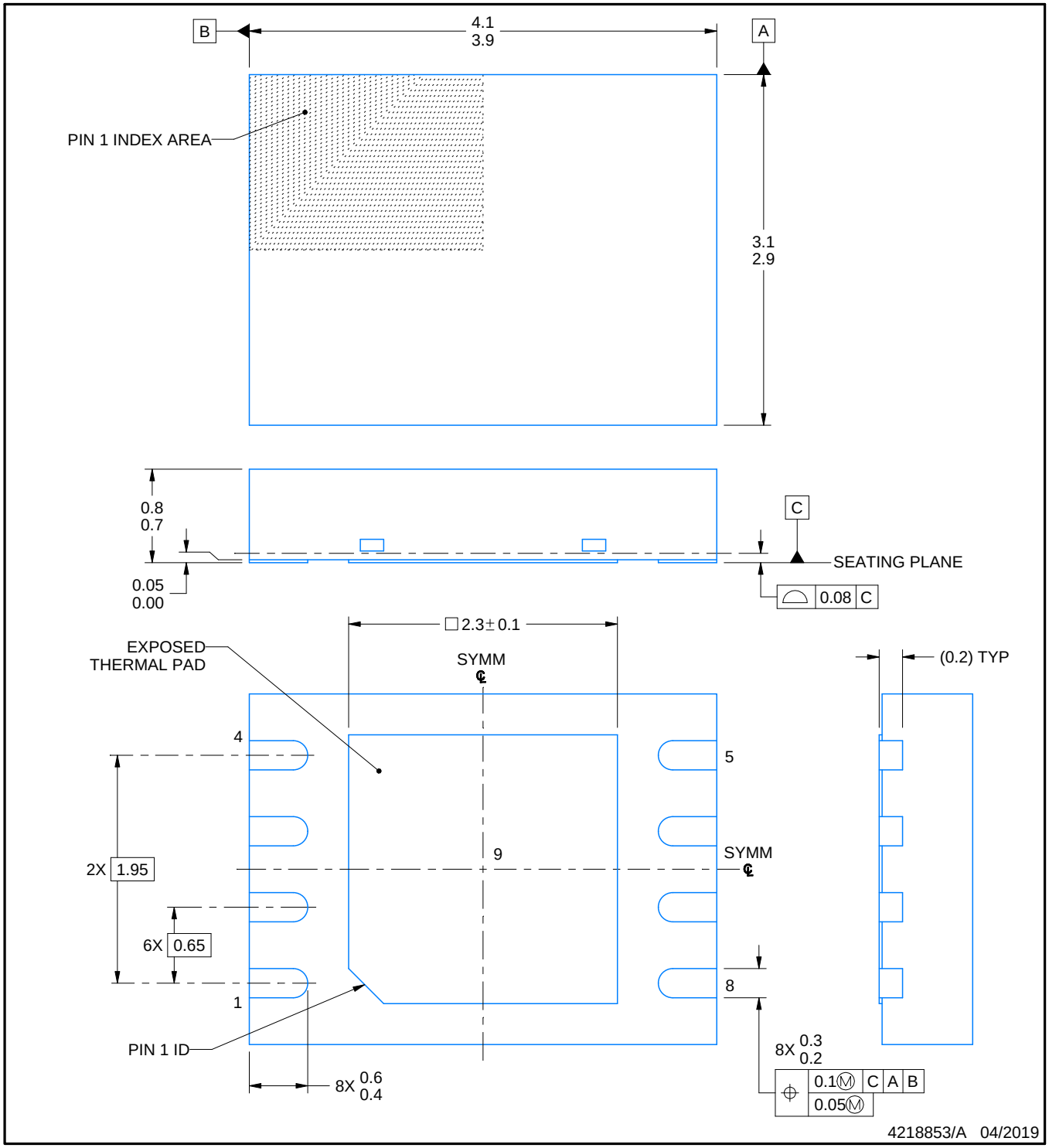

NOTES:

1. All linear dimensions are in millimeters. Any dimensions in parenthesis are for reference only. Dimensioning and tolerancing per ASME Y14.5M.
2. This drawing is subject to change without notice.
3. The package thermal pad must be soldered to the printed circuit board for thermal and mechanical performance.

EXAMPLE BOARD LAYOUT

DPJ0008A

WSON - 0.8 mm max height

PLASTIC SMALL OUTLINE - NO LEAD

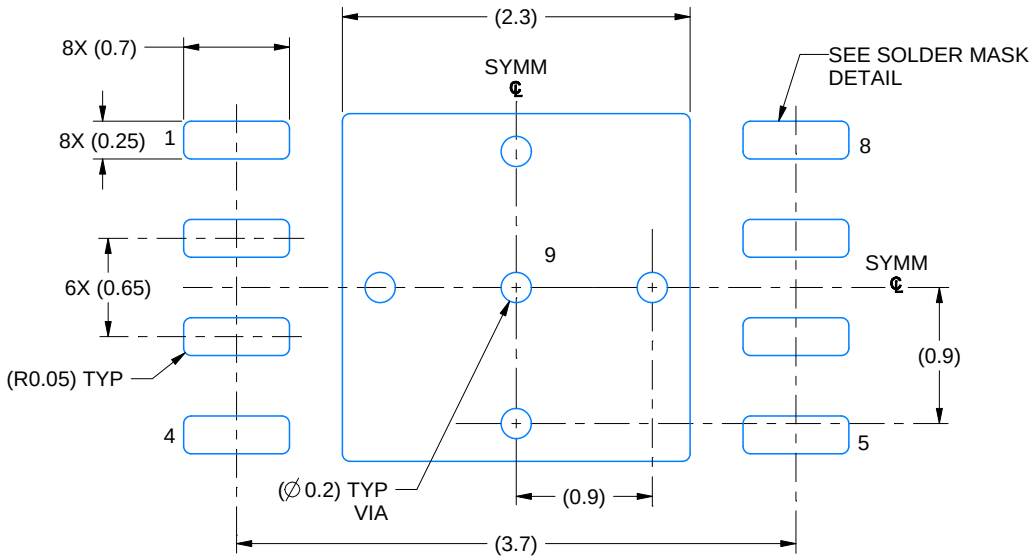

LAND PATTERN EXAMPLE
EXPOSED METAL SHOWN
SCALE: 20X

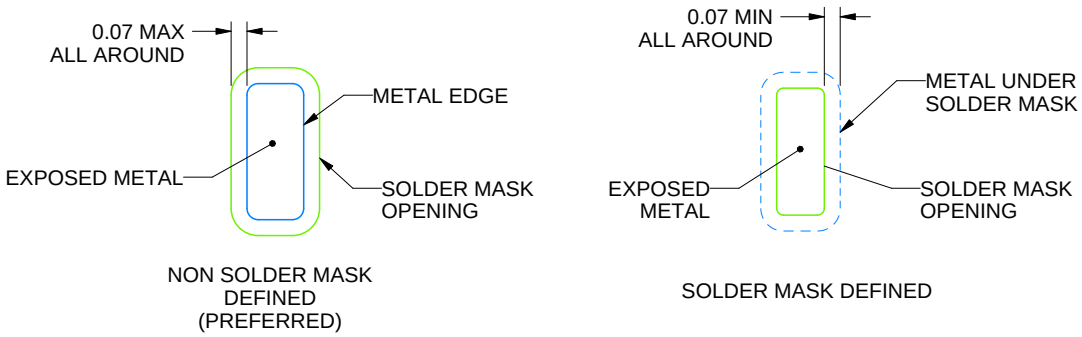

SOLDER MASK DETAILS

4218853/A 04/2019

NOTES: (continued)

4. This package is designed to be soldered to a thermal pad on the board. For more information, see Texas Instruments literature number SLUA271 (www.ti.com/lit/slua271).
5. Vias are optional depending on application, refer to device data sheet. If any vias are implemented, refer to their locations shown on this view. It is recommended that vias under paste be filled, plugged or tented.

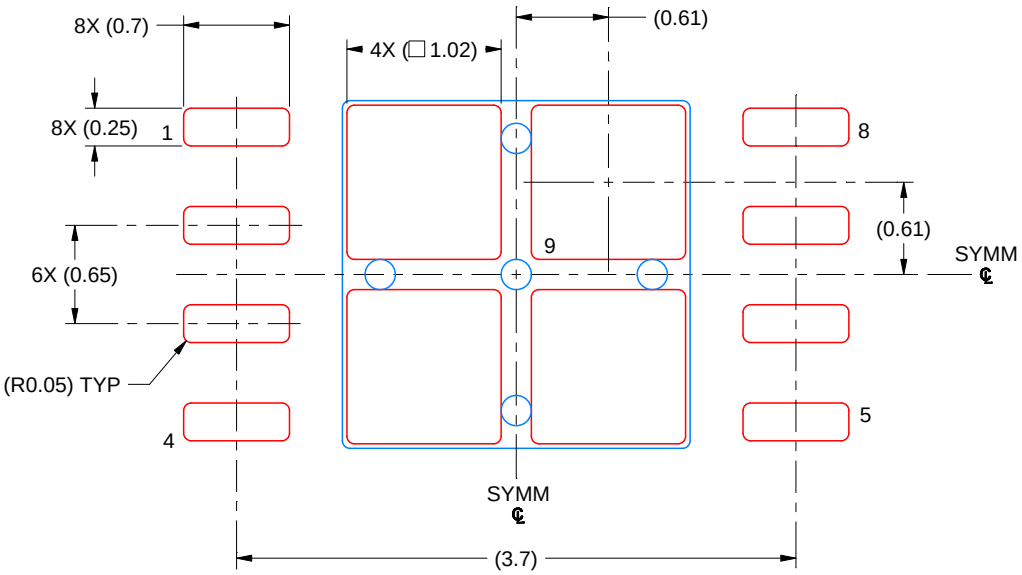

SOLDER PASTE EXAMPLE
BASED ON 0.125 MM THICK STENCIL
SCALE: 20X

EXPOSED PAD 9
79% PRINTED SOLDER COVERAGE BY AREA UNDER PACKAGE

4218853/A 04/2019

NOTES: (continued)

6. Laser cutting apertures with trapezoidal walls and rounded corners may offer better paste release. IPC-7525 may have alternate design recommendations.

IMPORTANT NOTICE AND DISCLAIMER

TI PROVIDES TECHNICAL AND RELIABILITY DATA (INCLUDING DATASHEETS), DESIGN RESOURCES (INCLUDING REFERENCE DESIGNS), APPLICATION OR OTHER DESIGN ADVICE, WEB TOOLS, SAFETY INFORMATION, AND OTHER RESOURCES “AS IS” AND WITH ALL FAULTS, AND DISCLAIMS ALL WARRANTIES, EXPRESS AND IMPLIED, INCLUDING WITHOUT LIMITATION ANY IMPLIED WARRANTIES OF MERCHANTABILITY, FITNESS FOR A PARTICULAR PURPOSE OR NON-INFRINGEMENT OF THIRD PARTY INTELLECTUAL PROPERTY RIGHTS.

These resources are intended for skilled developers designing with TI products. You are solely responsible for (1) selecting the appropriate TI products for your application, (2) designing, validating and testing your application, and (3) ensuring your application meets applicable standards, and any other safety, security, regulatory or other requirements.

These resources are subject to change without notice. TI grants you permission to use these resources only for development of an application that uses the TI products described in the resource. Other reproduction and display of these resources is prohibited. No license is granted to any other TI intellectual property right or to any third party intellectual property right. TI disclaims responsibility for, and you fully indemnify TI and its representatives against any claims, damages, costs, losses, and liabilities arising out of your use of these resources.

TI’s products are provided subject to TI’s Terms of Sale, TI’s General Quality Guidelines, or other applicable terms available either on ti.com or provided in conjunction with such TI products. TI’s provision of these resources does not expand or otherwise alter TI’s applicable warranties or warranty disclaimers for TI products. Unless TI explicitly designates a product as custom or customer-specified, TI products are standard, catalog, general purpose devices.

TI objects to and rejects any additional or different terms you may propose.

Copyright © 2026, Texas Instruments Incorporated

Last updated 10/2025

ENTEGRECİ

Bu belge www.entegreci.com üzerinden sunulmaktadır.

Elektronik komponent tedarikinde Entegreci

Entegreci, Eskişehir merkezli, Türkiye geneline satış yapan bir elektronik komponent mağazasıdır. Entegreler (IC), mikrodenetleyiciler, transistörler, diyotlar, pasif elemanlar, konnektörler, modüller ve geliştirme kartları tek adetten seri üretim adetlerine kadar satılır. Ürün sayfalarında güncel stok durumunu, fiyatı ve datasheet bağlantısını bulabilirsiniz.

Parça koduyla arama

Üretici parça numarasını yazın; stok ve fiyatı hemen görün.

www.entegreci.com

Ürün kategorileri

Entegreden kapasitöre tüm elektronik komponent kategorileri.

Kategorilere göz atın

Üreticiler

Aradığınız üreticinin ürünlerini tek sayfada inceleyin.

Üreticileri görün

Toplu alım ve teklif

Listede olmayan ya da yüksek adetli parçalar için teklif isteyin.

Teklif isteyin

www.entegreci.com | **destek@entegreci.com** | **0850 305 90 34**

Entegreci is an online electronic components store based in Türkiye. Search by manufacturer part number to see stock, prices and datasheets for integrated circuits, microcontrollers, transistors, passive components and connectors, or request a quote for parts that are not listed.

Bu sayfa Entegreci tarafından eklenmiştir. Belgenin önceki sayfaları asıl yayıncısına aittir ve içeriği değiştirilmemiştir; en güncel sürüm için belgenin yayıncısına başvurun.