BQ756506-Q1 4S or 6S Standalone Precision Automotive Battery Monitor, Balancer, and Integrated Current Sense

1 Features

- Qualified for automotive applications
- AEC-Q100 Qualified with the following results:
  - Device temperature grade 1: –40°C to +125°C ambient operating temperature range
  - Device HBM ESD classification level 2
  - Device CDM ESD classification level C4B
- Functional Safety-Compliant
  - Developed for functional safety applications
  - Documentation to aid ISO 26262 system design
  - Systematic capability up to ASIL D
  - Hardware capability up to ASIL D
- ±1.5-mV ADC accuracy
- Pin-package and software compatible device family:
  - Stackable monitor 16S (BQ79616-Q1, BQ79656-Q1), 14S (BQ79614-Q1, BQ79654-Q1), and 12S (BQ79612-Q1, BQ79652-Q1)
  - Standalone monitor 48-V system (BQ75614-Q1)
- Supports current-sense measurement
- Supports fuse and relay open and close diagnostics
- Built-in redundancy path for voltage and temperature and current diagnostics
- Highly accurate cell voltage measurements within 128 µs for all cell channels
- Integrated post-ADC configurable digital low-pass filters
- Built-in host-controlled hardware reset to emulate POR-like device reset
- Supports internal cell balancing
  - Balancing current at 240 mA
  - Built-in balancing thermal management with automatic pause and resume control
- 5-V LDO output to power external digital isolator
- UART host interface
- Built-in SPI controller

2 Applications

- Automotive 12-V Li-ion battery systems
- E-bikes, E-scooters

3 Description

The BQ756506-Q1 device provides high-accuracy cell voltage measurements up to 6S battery modules in less than 200 µs while this device also supports shunt-resistor current sense measurement. The integrated front-end filters enable the system to implement with simple, low voltage rated, differential RC filters on the cell input channels. The integrated, post-ADC, low-pass filters enable filtered, DC-like, voltage measurements. This device also supports integrated current sensing capabilities with an option to synchronize with cell voltage measurements for better state of charge (SOC) calculation. The device supports autonomous internal cell balancing with temperature monitoring to auto-pause and resume balancing to avoid an overtemperature condition.

Device Information

PART NUMBER (1)	PACKAGE	BODY SIZE (NOM)
BQ756506-Q1	HTQFP (64-pin)	10.00 mm × 10.00 mm

(1) For all available packages, see the orderable addendum at the end of the data sheet.

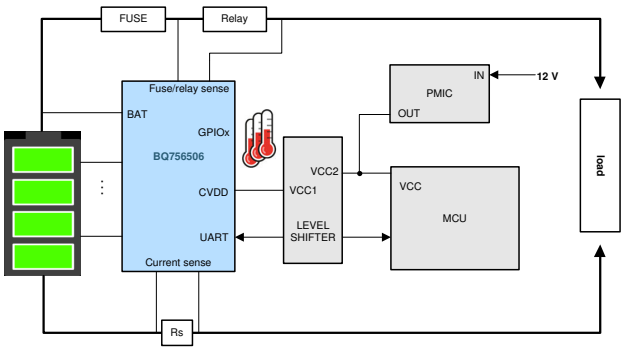

Simplified Sytem Diagram

An IMPORTANT NOTICE at the end of this data sheet addresses availability, warranty, changes, use in safety-critical applications, intellectual property matters and other important disclaimers. PRODUCTION DATA.

Table of Contents

1 Features....1
2 Applications....1
3 Description....1
4 Revision History....2
5 Description (continued)....3
6 Pin Configuration and Functions....4
7 Specifications....7
7.1 Absolute Maximum Ratings....7
7.2 ESD Ratings....7
7.3 Recommended Operating Conditions....7
7.4 Thermal Information....8
7.5 Electrical Characteristics....8
7.6 Timing Requirements....14
7.7 Typical Characteristics....17
8 Detailed Description....18
8.1 Overview....18
8.2 Functional Block Diagram....19
8.3 Feature Description....20
8.4 Device Functional Modes....71
8.5 Register Maps....78
9 Application and Implementation....141
9.1 Application Information....141
9.2 Typical Applications....141
10 Power Supply Recommendations....153
11 Layout....154
11.1 Layout Guidelines....154
11.2 Layout Example....155
12 Device and Documentation Support....159
12.1 Device Support....159
12.2 Receiving Notification of Documentation Updates....159
12.3 Support Resources....159
12.4 Trademarks....159
12.5 Electrostatic Discharge Caution....159
12.6 Glossary....159
13 Mechanical, Packaging, and Orderable Information....160

4 Revision History

NOTE: Page numbers for previous revisions may differ from page numbers in the current version.

Changes from Revision A (August 2023) to Revision B (October 2023)	Page
• Changed data sheet status from Restricted to Public	1

Changes from Revision * (June 2022) to Revision A (August 2023)	Page
• Changed Input Voltage parameter MAX value from 45 V to 60 V in Absolute Maximum Ratings	7

Copyright © 2023 Texas Instruments Incorporated

5 Description (continued)

This device also includes eight GPIOs or auxiliary inputs that can be used for external thermistor measurements.

Host communication to the BQ756506-Q1 can be connected via the device's dedicated UART interface.

Copyright © 2023 Texas Instruments Incorporated

6 Pin Configuration and Functions

PAP Package
64-Pin HTQPF
Top View

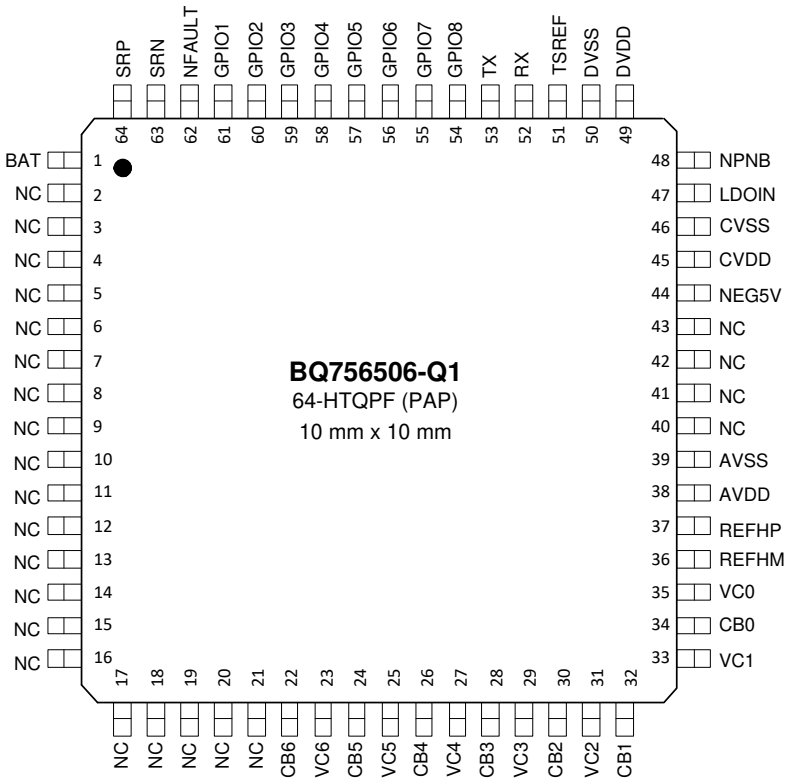

Figure 6-1.

Table 6-1. Pin Functions

PIN		TYPE[1]	DESCRIPTION
NAME	No.		
BAT	1	P	Power supply input and top of module measurement input. Connect to the top cell of the battery module.
NPNB	48	P	Connect to the base of an external NPN transistor.
LDOIN	47	P	6-V preregulated analog power supply input/sense pin. Connect to the emitter of the external NPN transistor and connect a 0.1-µF decoupling capacitor to CVSS.
AVDD	38	P	5-V regulated output. AVDD supplies the internal analog circuits. Bypass AVDD with a capacitor to AVSS.
AVSS	39	GND	Analog ground. Ground connection for internal analog circuits. Connect DVSS, CVSS, REFHM, and AVSS externally. All ground pins must not be left unconnected.
NEG5V	44	P	Negative 5-V charge pump used for Main ADC. Connect with a capacitor to CVSS.
DVDD	49	P	1.8-V regulated output. DVDD supplies the internal digital circuits. Bypass DVDD with a capacitor to DVSS.
DVSS	50	GND	Digital ground. Ground connection for internal digital logics. Connect DVSS, CVSS, REFHM, and AVSS externally. All ground pins must be connected to ground.
CVDD	45	P	5-V I/Os power supply. CVDD supplies the I/O pins. This power supply also supports an additional 10-mA external load in ACTIVE and SLEEP.
CVSS	46	GND	Ground connection. Connect DVSS, CVSS, REFHM, and AVSS externally. All ground pins must be connected to ground.
TSREF	51	P	5-V bias voltage for NTC thermistor. Connect TSREF to the top of the NTC resistor divider network to the GPIOs when they are configured for NTC temperature monitoring. Bypass TSREF with a capacitor to CVSS.

Copyright © 2023 Texas Instruments Incorporated

Table 6-1. Pin Functions (continued)

PIN		TYPE[1]	DESCRIPTION
NAME	No.		
REFHP	37	P	Precision reference output pin. Bypass with a capacitor to REFHM.
REFHM	36	GND	Precision reference ground. Ground connection for the internal precision reference. Connect DVSS, CVSS, REFHM, and AVSS externally. All ground pins must be connected to ground.
NC	3	I	No connection. Connect pin to BAT.
NC	5	I	No connection. Connect pin to BAT.
NC	7	I	No connection. Connect pin to BAT.
NC	9	I	No connection. Connect pin to BAT.
NC	11	I	No connection. Connect pin to BAT.
NC	13	I	No connection. Connect pin to BAT.
NC	15	I	No connection. Connect pin to BAT.
NC	17	I	No connection. Connect pin to BAT.
NC	19	I	No connection. Connect pin to BAT.
NC	21	I	No connection. Connect pin to BAT.
VC6	23	I	Cell voltage sense input. Connect to the positive terminal of cell 6. Connect a differential RC filter to VC5.
VC5	25	I	Cell voltage sense input. Connect to the positive terminal of cell 5. Connect a differential RC filter to VC4.
VC4	27	I	Cell voltage sense input. Connect to the positive terminal of cell 4. Connect a differential RC filter to VC3.
VC3	29	I	Cell voltage sense input. Connect to the positive terminal of cell 3. Connect a differential RC filter to VC2.
VC2	31	I	Cell voltage sense input. Connect to the positive terminal of cell 2. Connect a differential RC filter to VC1.
VC1	33	I	Cell voltage sense input. Connect to the positive terminal of cell 1. Connect a differential RC filter to VC0.
VC0	35	I	Cell voltage sense input. Connect to the negative terminal of cell 1. Connect a differential RC filter to AVSS.
NC	2	I/O	No connection. Connect pin to BAT.
NC	4	I/O	No connection. Connect pin to BAT.
NC	6	I/O	No connection. Connect pin to BAT.
NC	8	I/O	No connection. Connect pin to BAT.
NC	10	I/O	No connection. Connect pin to BAT.
NC	12	I/O	No connection. Connect pin to BAT.
NC	14	I/O	No connection. Connect pin to BAT.
NC	16	I/O	No connection. Connect pin to BAT.
NC	18	I/O	No connection. Connect pin to BAT.
NC	20	I/O	No connection. Connect pin to BAT.
CB6	22	I/O	Cell balance connection. This pin is connected to the internal cell balancing FET. Connect this pin to the positive terminal of cell 6 with a differential RC filter to CB5. The filter resistor also sets the internal balance current. Connect to the BAT pin via a capacitor.
CB5	24	I/O	Cell balance connection. This pin is connected to the internal cell balancing FET. Connect this pin to the positive terminal of cell 5 with a differential RC filter to CB4. The filter resistor also sets the internal balance current.
CB4	26	I/O	Cell balance connection. This pin is connected to the internal cell balancing FET. Connect this pin to the positive terminal of cell 4 with a differential RC filter to CB3. The filter resistor also sets the internal balance current.
CB3	28	I/O	Cell balance connection. This pin is connected to the internal cell balancing FET. Connect this pin to the positive terminal of cell 3 with a differential RC filter to CB2. The filter resistor also sets the internal balance current.

Copyright © 2023 Texas Instruments Incorporated

Table 6-1. Pin Functions (continued)

PIN		TYPE[1]	DESCRIPTION
NAME	No.		
CB2	30	I/O	Cell balance connection. This pin is connected to the internal cell balancing FET. Connect this pin to the positive terminal of cell 2 with a differential RC filter to CB1. The filter resistor also sets the internal balance current.
CB1	32	I/O	Cell balance connection. This pin is connected to the internal cell balancing FET. Connect this pin to the positive terminal of cell 1 with a differential RC filter to CB0. The filter resistor also sets the internal balance current.
CB0	34	I/O	Cell balance connection. This pin is connected to the internal cell balancing FET. Connect to the negative terminal of cell 1 with differential RC filter to AVSS. The filter resistor also sets the internal balance current.
SRP	64	I	Current sense resistor connection. With SRP and SRN connected to each end of a current sense resistor.
SRN	63	I	Current sense resistor connection. With SRP and SRN connected to each end of a current sense resistor.
RX	52	I	UART receiver input. Pull up to CVDD with an external resistor and connect the device RX to the TX output of the host MCU. If unused, connect RX to CVDD.
TX	53	O	UART transmitter output. Connect device TX to RX input of the host MCU and will be pulled up from the host side. If unused, leave it floating.
NC	40, 41, 42, 43	I/O	No connection. Leave pin floating.
NFAULT	62	O	Fault indication output. Active low. Pull up NFAULT to CVDD with a pullup resistor and connect NFAULT to host MCU GPIO. If unused, leave it unconnected.
GPIO1	61	I/O	General purpose input/output, configuration options are: • For external NTC thermistor connection, connect NTC thermistor to the pin and pull up to TSREF. Used as input to ADC and OT and UT hardware comparators. • For external DC voltage measurement, configured as input to ADC. • Generic digital input/output. • Use as I/O for SPI controller.
GPIO2	60	I/O	
GPIO3	59	I/O	
GPIO4	58	I/O	
GPIO5	57	I/O	
GPIO6	56	I/O	
GPIO7	55	I/O	
GPIO8	54	I/O	

(1) GND = Ground, I = Input, I/O = Input/Output, O = Output, P = Power

Copyright © 2023 Texas Instruments Incorporated

7 Specifications

7.1 Absolute Maximum Ratings

over operating free-air temperature range (unless otherwise noted)(1)

		MIN	MAX	UNIT
Input Voltage	BAT, VC* (except VC0), CB* (except CB0), NFAULT to AVSS (2) (3)	–0.3	60	V
Input Voltage	CB0, VC0 to AVSS	–0.3	5.5	V
	SRP, SRN to AVSS	-0.3	2.1	V
	VCn to VCn-1, n = 1 to 6 (2)	–80	80	V
	CBn to CBn-1, n = 1 to 6 (3)	–0.3	16	V
	SRP to SRN	-0.3	1.8	V
	LDOIN to AVSS	–0.3	9	V
	NPNB to AVSS	–0.3	10	V
	AVDD to AVSS	–0.3	5.5	V
	DVDD to DVSS	–0.3	1.98	V
	CVDD to CVSS	–0.3	6	V
	TSREF to AVSS	–0.3	5.5	V
	REFHP to REFHM	–0.3	5.5	V
	NEG5V to AVSS	–5.5	0	V
	TX, RX to AVSS	–0.3	6	V
	GPIO* to AVSS	–0.3	5.5	V
CB* current	Max of 3 cell in balancing at 75°C ambient		240	mA
I/O current	GPIO*, RX, TX current		10	mA
T_{OTP_PROG}	Device will not start OTP programming above this temperature		55	°C
T_A	Ambient temperature	–40	130	°C
T_J	Junction temperature	–40	150	°C
T_{stg}	Storage temperature	–65	150	°C

(1) Operation outside the *Absolute Maximum Ratings* may cause permanent damage. Absolute maximum ratings do not imply functional operation of the device at these or any other conditions beyond those listed under *Recommended Operating Conditions.* If briefly operating outside the *Recommended Operating Conditions* but within the *Absolute Maximum Ratings*, the device may not sustain damage, but it may not be fully functional. Operating the device in this manner may affect device reliability, functionality, performance, and shorten the device lifetime.
(2) VC pin voltage has to meet criteria of both VCn to AVSS as well as VCn to VCn-1.
(3) CB pin voltage has to meet criteria of both CBn to AVSS as well as CBn to CBn-1.

7.2 ESD Ratings

				VALUE	UNIT
$V_{(ESD)}$	Electrostatic discharge	Human body model (HBM), per AEC Q100-002,(1) HBM ESD classification level H1C		±2000	V
		Charged device model (CDM), per AEC Q100-011, CDM ESD classification level C2a	All Pins	±500	
			Other pins (1, 16, 17, 32, 33, 48, 49, 64)	±750	

(1) AEC Q100-002 indicates that HBM stressing shall be in accordance with the ANSI/ESDA/JEDEC JS-001 specification.

7.3 Recommended Operating Conditions

over operating free-air temperature range (unless otherwise noted)

		MIN	NOM	MAX	UNIT
V_{BAT_RANGE}	Total module voltage, full functionality, no OTP programming	9		32	V

Copyright © 2023 Texas Instruments Incorporated

7.3 Recommended Operating Conditions (continued)

over operating free-air temperature range (unless otherwise noted)

		MIN	NOM	MAX	UNIT
$V_{BAT_OTP_RANGE}$	Total module voltage, full functionality, OTP programming allow	11		32	V
V_{CELL_RANGE}	VC_n - VC_{n-1}, where n = 2 to 6	–1		5	V
	VC1 - VC0	0		5	V
	VC0, CB0 to AVSS	-0.3		5	V
	VC1, VC2, CB1, CB2 to AVSS	-0.3		32	V
	VCn, CBn to AVSS, where n = 3 to 6	3		32	V
V_{CS_RANGE}	Current sense range, V_{SRP} - V_{SRN}	-100		100	mV
V_{CB_RANGE}	CB_n - CB_{n-1}, where n = 1 to 6	0		5	V
V_{IO_RANGE}	RX, TX, NFAULT	0		CVDD	V
V_{GPIO_RANGE}	$GPIO_n$ input, where n = 1 to 8	0.2		4.8	V
I_{IO}	$GPIO_n$, RX, TX, where n = 1 to 8			5	mA
T_A	Operation temperature	–40		125	°C

7.4 Thermal Information

THERMAL METRIC		BQ7961x-Q1 PAP (HTQFP) 64 PINS	UNIT
$R_{\theta JA}$	Junction-to-ambient thermal resistance	21.6	°C/W
$R_{\theta JC(top)}$	Junction-to-case (top) thermal resistance	8.7	°C/W
$R_{\theta JB}$	Junction-to-board thermal resistance	7.9	°C/W
ψ_{JT}	Junction-to-top characterization parameter	0.1	°C/W
ψ_{JB}	Junction-to-board characterization parameter	7.8	°C/W
$R_{\theta JC(bot)}$	Junction-to-case (bottom) thermal resistance	2.1	°C/W

7.5 Electrical Characteristics

over operating -40℃ to 125℃ free-air temperature range, VBAT = 9V to 32V (unless otherwise noted)

PARAMETER		TEST CONDITIONS	MIN	TYP	MAX	UNIT
THERMAL SHUTDOWN						
T_{SHUT}	Thermal shutdown (rising direction)		130	137	152	°C
T_{SHUT_FALL}	Thermal shutdown (falling direction)		112		129	°C
T_{SHUT_HYS}	Thermal shutdown (rising - falling direction)			20		°C
T_{WARN_RANGE}	Thermal warning Threshold (rising direction)		85		115	°C
T_{WARN_HYS}	Thermal warning hysteresis (falling direction)			10		°C
T_{WARN_ACC}	Thermal warning accuracy (+/-)			5		°C
SUPPLY CURRENTS						
I_{SHDN}	Supply current in SHUTDOWN mode	Sum of both I_{BAT} and I_{LDOIN}		16	23	µA

Copyright © 2023 Texas Instruments Incorporated

7.5 Electrical Characteristics (continued)

over operating -40℃ to 125℃ free-air temperature range, VBAT = 9V to 32V (unless otherwise noted)

PARAMETER		TEST CONDITIONS	MIN	TYP	MAX	UNIT
$I_{SLP(IDLE)}$	Baseline supply current in SLEEP mode. No fault, no protector comparator, no cell balancing	Sum of both I_{BAT} and I_{LDOIN} T_A = -20℃ to 65℃		120	160	µA
		Sum of both I_{BAT} and I_{LDOIN} T_A = -40℃ to 125℃			220	µA
$I_{ACT(IDLE)}$	Baseline supply current in ACTIVE mode	Sum of both I_{BAT} and I_{LDOIN} No fault, no communication, no protector comparator, no cell balancing		10.4	11.6	mA
I_{CB_EN}	Additional supply current when cell balancing is on	At least 1 cell balancing FET is on, OT_{CB} is enabled. Other functions are inactive		1	1.5	mA
$I_{PROTCOMP}$	Additional supply current when protector comparator is on	Either OV/UV/OT/UT protector is enabled. Other functions are inactive		20	60	µA
I_{ADC}	Additional supply current when CS/ main and aux ADC are enabled	Both CS/Main ADC are on, in continiously mode, Other functions are inactive		1.8	2.4	mA
I_{ADC}	Additional supply current when ADC is enabled	Main or Aux ADC on, and conversion is in progress. Other functions are inactive		0.4	0.6	mA
		2 ADCs on, and conversion is in progress. Other functions are inactive (not applicable if current sense ADC is availbe in this device)		0.6	0.9	mA
I_{BAT}	Supply current goes into BAT pin	ACTIVE Mode		150		µA
		SLEEP Mode		25		µA
		SHUTDOWN Mode		5		µA
I_{OW_SINK}	Sink current for open wire test, applies to VC1 to VCn and CB1 to CBn, where n is the maximum number of channels in the device.		380	500	600	µA
I_{OW_SOURCE}	Source current for open wire test, applies to VC0 and CB0		380	500	600	µA
I_{LEAK_CS}	Leakage current SRP and SRN pin	Main and CS ADC is off			0.2	µA
I_{LEAK}	Leakage current on VC, CB pins	VC, CB pins with ADC off.			0.1	µA
V_{SR_OW}	Clamped voltage when I_{OW_SORUCE} is enabled for SRP and SRN				0.9	V
Supplies (LDOIN)						
V_{LDOIN}	LDOIN voltage	No OTP programming	5.9	6	6.1	V
		OTP programming	7.9	8	8.1	V
Supplies (CVDD)						
V_{CVDD}	CVDD output voltage	ACTIVE and SLEEP mode	4.9	5	5.1	V
		SHUTDOWN mode, no external Iload	3.95		6	V
		SHUTDOWN mode, max external Iload = 5mA	3.4		5.5	V
V_{CVDD_LDRG}	CVDD load regulation	ACTIVE/SLEEP mode, max external Iload = 10mA	–30		30	mV
V_{CVDD_OV}	CVDD OV threshold	ACTIVE/SLEEP mode, max external Iload = 10mA	5.3	5.5	5.7	V
V_{CVDD_OVHYS}	CVDD OV Hystersis	ACTIVE/SLEEP mode, max external Iload = 10mA	130	150	170	mV
V_{CVDD_UV}	CVDD UV threshold	SHUTDOWN mode		3.5		V
		ACTIVE/SLEEP mode, max external Iload = 10mA	4.3	4.45	4.65	V

Copyright © 2023 Texas Instruments Incorporated

7.5 Electrical Characteristics (continued)

over operating -40°C to 125°C free-air temperature range, VBAT = 9V to 32V (unless otherwise noted)

PARAMETER		TEST CONDITIONS	MIN	TYP	MAX	UNIT
V_{CVDD_UVHYS}	CVDD UV Hystersis			260		mV
V_{CVDD_ILIMIT}	CVDD current limit	ACTIVE, SLEEP	35	60	85	mA
Supplies (AVDD)						
V_{AVDD}	AVDD output voltage	$C_{SUPPLIES}$ = 1µF, ACTIVE mode	4.85	5	5.21	V
V_{AVDD_OV}	AVDD OV threshold	$C_{SUPPLIES}$ = 1µF, ACTIVE mode	5.25	5.5	5.7	V
V_{AVDD_OVHYS}	AVDD OV Hystersis	$C_{SUPPLIES}$ = 1µF, ACTIVE mode	135	155	165	mV
V_{AVDD_UV}	AVDD UV threshold	$C_{SUPPLIES}$ = 1µF, ACTIVE mode	4.25	4.45	4.6	V
V_{AVDD_UVHYS}	AVDD UV Hystersis	$C_{SUPPLIES}$ = 1µF, ACTIVE mode	235	340	430	mV
V_{AVDD_ILIMIT}	AVDD current limit	$C_{SUPPLIES}$ = 1µF	10	30	50	mA
Supplies (DVDD)						
V_{DVDD}	DVDD output voltage	$C_{SUPPLIES}$ = 1µF, ACTIVE mode	1.65	1.8	1.95	V
V_{DVDD_OV}	DVDD OV threshold	$C_{SUPPLIES}$ = 1µF, ACTIVE mode	1.95	2.1	2.3	V
V_{DVDD_OVHYS}	DVDD OV Hystersis	$C_{SUPPLIES}$ = 1µF, ACTIVE mode	40	65	120	mV
V_{DVDD_UV}	DVDD UV threshold	$C_{SUPPLIES}$ = 1µF, ACTIVE mode	1.623	1.65	1.71	V
V_{DVDD_UVHYS}	DVDD UV Hystersis	$C_{SUPPLIES}$ = 1µF, ACTIVE mode	15	50	73	mV
V_{DVDD_ILIMIT}	DVDD current limit		13	30	53	mA
Supplies (TSREF)						
V_{TSREF}	TSREF output voltage	$C_{SUPPLIES}$ = 1µF, ACTIVE mode	4.975	5	5.025	V
V_{TSREF_LDRG}	TSREF load regulation	I_{load} = 4mA, $C_{SUPPLIES}$ = 1µF, ACTIVE mode	–30		30	mV
V_{TSREF_OV}	TSREF OV threshold	I_{load} = 4mA, $C_{SUPPLIES}$ = 1µF, ACTIVE mode	5.2	5.6	5.8	V
V_{TSREF_OVHYS}	TSREF OV Hystersis	I_{load} = 4mA, $C_{SUPPLIES}$ = 1µF, ACTIVE mode	98	110	120	mV
V_{TSREF_UV}	TSREF UV threshold	I_{load} = 4mA, $C_{SUPPLIES}$ = 1µF, ACTIVE mode	4.0	4.2	4.4	V
V_{TSREF_UVHYS}	TSREF UV Hystersis	I_{load} = 4mA, $C_{SUPPLIES}$ = 1µF, ACTIVE mode	300	350	400	mV
V_{TSREF_ILIMIT}	TSREF current limit	Device in ACTIVE Mode	15	30	52	mA
Negative Charge Pump (NEG5V)						
V_{NEG5V}	NEG5V pin voltage	C_{NEG5V} = 0.1µF	-5.3	-4.6	-4.0	V
V_{NEG5V_UV}	NEG5V UV threshold (rising)	C_{NEG5V} = 0.1µF	-4.1	-3.5	-3.0	V
$V_{NEG5V_UVRECOV}$	NEG5V UV Recovery	C_{NEG5V} = 0.1µF	-4.3	-3.8	-3.3	V
CELL BALANCE						
R_{DSON}	Internal cell balance FET Rdson	VCn > 2.8V, where n = 1 to the maximum number of channels in the device; -40°C<T_A<125°C	1.45		4.6	Ω
V_{CB_DONE}	VCB_DONE detection threhsold setting range (not accuracy)	Step of 25mV	2.45		4	V
V_{MB_DONE}	VMB_DONE detection threhsold setting range (not accuracy) (Not available for standalone device)	Step of 1V	18		65	V
T_{OTCB}	OTCB threshold setting range (not accuracy)	Step of 2%	10		24	%
$T_{COOLOFF}$	COOLOFF threshold setting range (not accuracy)	Step of 2%	4		14	%
T_{CB_WARN}	CB TWARN threshold			105		°C
$T_{CB_WARN_HYS}$	CB TWARN Hysteresis			10		°C

Copyright © 2023 Texas Instruments Incorporated

7.5 Electrical Characteristics (continued)

over operating -40°C to 125°C free-air temperature range, VBAT = 9V to 32V (unless otherwise noted)

PARAMETER		TEST CONDITIONS	MIN	TYP	MAX	UNIT
ADC Resolution						
$ENOB_{MAIN}$	Main ADC Effective number of bits			16		bits
$ENOB_{AUX}$	AUX ADC Effective number of bits			14		bits
V_{LSB_ADC}	Main and AUX ADC Resolution for VCELL measurement			190.73		µV/LSB
V_{LSB_CSMAIN}	Main ADC Resolution for (SRP-SRN) measurement			30.52		µV/LSB
$V_{LSB_MAIN_DIETEMP1}$	DieTemp1 resolution (Main ADC)	ADC measurement is centered with 0x000 = 0°C		0.025		°C/LSB
$V_{LSB_AUX_DIETEMP2}$	DieTemp2 resolution (AUX ADC)	ADC measurement is centered with 0x000 = 0°C		0.025		°C/LSB
$V_{LSB_AUX_BAT}$	BAT resolution (AUX ADC)	Applies to BAT voltage measurement from AUX ADC		3.05		mV/LSB
V_{LSB_GPIO}	GPIO resolution (Main & AUX ADC)			152.59		µV/LSB
V_{LSB_TSREF}	TSREF resolution (Main ADC)			169.54		µV/LSB
V_{LSB_DIAG}	Diagnostic measurements resolution	REFL, VBG2, LPBG5, VCM, AVAO_REF, AVDD_REF, all the HW protector DAC		152.59		µV/LSB
V_{LSB_CS}	Current Sense ADC resolution (24-bit result)	Reading CURRENT_HI/MID/LO registers		14.9		nV/LSB
ADC Accuracy						
I_{VC_DELTA}	VCn to VCn-1 input current delta (when Main ADC is on)	T_A = -20°C to 65°C			1.8	µA
		T_A = -40°C to 105°C			2	µA
I_{VC}	VCn input current (when Main ADC is on)			8	12	µA
R_{CB_INPUT}	CB pin input impedance (when AUX ADC is on)			16		MΩ
$V_{ACC_MAIN_CELL}$	Total channel accuracy for main ADC VCELL measurement, LPF_VCELL[2:0] = 0x03 setting;	2V<V_{CELL}<4.5V; T_A=25°C	-2.2		1.5	mV
		2V<V_{CELL}<4.5V; -20°C<T_A<65°C	-3.0		2.4	mV
		2V<V_{CELL}<4.5V; -40°C<T_A<105°C	-3.5		2.6	mV
		2V<V_{CELL}<4.5V; -40°C<T_A<125°C	-3.5		2.6	mV
		1V<V_{CELL}< 5V; -40°C<T_A<125°C	-3.7		2.8	mV
		-2V<V_{CELL}< 5V; -40°C<T_A<125°C	-4.5		3.2	mV
$V_{ACC_AUX_CELL}$	Total channel accuracy for AUX ADC measurement (excluding BAT and GPIO accuracy);	2V<V_{CELL}<4.5V; T_A=25°C	-7.5		5.4	mV
		2V<V_{CELL}<4.5V; -20°C<T_A<65°C	-8.0		6.3	mV
		2V<V_{CELL}<4.5V; -40°C<T_A<105°C	-9.0		6.3	mV
		2V<V_{CELL}<4.5V; -40°C<T_A<125°C	-9.0		6.5	mV
		1V<V_{CELL}< 5V; -40°C<T_A<125°C	-9.0		6.6	mV
		0V<V_{CELL}< 5V; -40°C<T_A<125°C	-9.0		6.6	mV
$V_{(MAIN-AUX)}$	Main - AUX measurement during VCELL and OVDAC Reference diagnostic. Same input voltage to both ADC under same T_A;	2V<V_{CELL}<4.5V; T_A=25°C	-7.1		6.1	mV
		2V<V_{CELL}<4.5V; -20°C<T_A<65°C	-7.8		6.6	mV
		2V<V_{CELL}<4.5V; -40°C<T_A<105°C	-7.8		6.6	mV
		2V<V_{CELL}<4.5V; -40°C<T_A<125°C	-7.8		6.7	mV
		1V<V_{CELL}< 5V; -40°C<T_A<125°C	-7.9		6.9	mV
		0V<V_{CELL}< 5V; -40°C<T_A<125°C	-7.9		6.9	mV

Copyright © 2023 Texas Instruments Incorporated

7.5 Electrical Characteristics (continued)

over operating -40℃ to 125℃ free-air temperature range, VBAT = 9V to 32V (unless otherwise noted)

PARAMETER		TEST CONDITIONS	MIN	TYP	MAX	UNIT
$V_{ACC_MAIN_GPIO_RATIO}$	Measured GPIO from Main ADC/ measured TSREF from Main ADC;	0.08V<V_{IN}<0.2V, 85ºC<T_A<125ºC	-0.20		0.20	%
		0.2V<V_{IN}<4.6V, -40ºC<T_A<105ºC	-0.20		0.20	%
		4.6V<V_{IN}<4.8V, -40ºC<T_A<-20ºC	-0.30		0.30	%
$V_{ACC_AUX_GPIO_RATIO}$	Measured GPIO from AUX ADC/ measured TSREF from AUX ADC;	0.08V<V_{IN}<0.2V, 85ºC<T_A<125ºC	-0.20		0.20	%
		0.2V<V_{IN}<4.6V, -40ºC<T_A<105ºC	-0.20		0.20	%
		4.6V<V_{IN}<4.8V, -40ºC<T_A<-20ºC	-0.30		0.30	%
$V_{ACC_MAIN_GPIO_ABS}$	Total channel accuracy for GPIO measurement (Main ADC);	0.08V<V_{IN}<0.2V, 85ºC<T_A<125ºC	-4.00		4.00	mV
		0.2V<V_{IN}<4.6V, -40ºC<T_A<105ºC	-5.00		3.00	mV
		4.6V<V_{IN}<4.8V, -40ºC<T_A<-20ºC	-4.00		4.00	mV
$V_{ACC_AUX_GPIO_ABS}$	Accuracy from AUX ADC on GPIO	0.08V<V_{IN}<0.2V, 85ºC<T_A<125ºC	-6.00		6.00	mV
		0.2V<V_{IN}<4.6V, -40ºC<T_A<105ºC	-6.00		6.00	mV
		4.6V<V_{IN}<4.8V, -40ºC<T_A<-20ºC	-6.00		6.00	mV
$V_{ACC_MAIN_CS}$	Total channel accuracy for (SRP-SRN) from Main ADC	LPF_SR[2:0] = 0x00	-1.1		1.1	mV
$V_{ACC_AUX_BAT}$	AUX ADC measurement accuracy for BAT pin	Vbat pack range: 16V to 32V, T_A = -40ºC to 125ºC	-270		170	mV
$V_{ACC_AUX_REFL}$	AUX ADC measurement result		1.092	1.1	1.106	V
$V_{ACC_AUX_VBG2}$	AUX ADC measurement result		1.092	1.1	1.106	V
$V_{ACC_AUX_VCM}$	AUX ADC measurement result		2.400	2.5	2.550	V
$V_{ACC_AUX_AVAO_REF}$	AUX ADC measurement result		2.400	2.47	2.550	V
$V_{ACC_AUX_AVDD_REF}$	AUX ADC measurement result		2.400	2.47	2.550	V
$V_{ACC_AUX_OVDAC}$	AUX ADC measurement result	Setting at 4.475V; T_A = -20ºC to 65ºC	4.450		4.500	V
$V_{ACC_AUX_OVDAC}$	AUX ADC measurement result	Setting at 4.475V; T_A = -40ºC to 105ºC	4.445		4.500	V
$V_{ACC_AUX_OVDAC}$	AUX ADC measurement result	Setting at 4.475V; T_A = -40ºC to 125ºC	4.445		4.500	V
$V_{ACC_AUX_OVDAC}$	AUX ADC measurement result	Setting at 3.8V	3.770		3.825	V
$V_{ACC_AUX_OVDAC}$	AUX ADC measurement result	Setting at 3V	2.970		3.030	V
$V_{ACC_AUX_UVDAC}$	AUX ADC measurement result	Setting at 3.1V	3.095	3.1	3.150	V
$V_{ACC_AUX_VCBDONEDAC}$	AUX ADC measurement result	Setting at 4V	3.950	4	4.050	V
$V_{ACC_AUX_OTDAC}$	AUX ADC measurement result	Setting at 39%	1.900	1.95	2.000	V
$V_{ACC_AUX_UTDAC}$	AUX ADC measurement result	Setting at 80%	3.950	4	4.050	V
$V_{ACC_MAIN_TSREF}$	Main ADC measurement result		4.975	5	5.025	V
$V_{ACC_MAIN__DIETEMP}$	Total channel accuracy for Die Temp1 measurement (+/-)			3		℃
$V_{ACC_AUX_DIETEMP}$	Total channel accuracy for Die Temp2 measurement (+/-)			6		℃
$I_{SRP_N_Diff}$	Differential SRN/SRP input current (CS and main ADC are on)	Apply 100mV differential acrsoss SRP/SRN		1.4		µA
V_{RANGE_CS}	Effective input range of CS ADC		-100		100	mV
V_{NOISE_CS}	CS ADC input referred noise	CS_DS[1:0] = 11, CS ADC in continious mode, short SRP/SRN at pins		0.71		uV_{RMS}
Gain_error_cs_room_uncal	Gain error of CS ADC @25ºC, it could be single temp piont calibrated out	T_A = 25ºC, CS_DS[1:0] = 01, measured at -75mV and 75mV	-0.6		0.6	%

Copyright © 2023 Texas Instruments Incorporated

7.5 Electrical Characteristics (continued)

over operating -40℃ to 125℃ free-air temperature range, VBAT = 9V to 32V (unless otherwise noted)

PARAMETER		TEST CONDITIONS	MIN	TYP	MAX	UNIT
Gain_error_cs_drift1	Gain error of CS ADC drift over temperature, $\|V_{RANGE_CS}\|$ <100mV	T_A = -20ºC to 85ºC, CS_DS[1:0] = 01, measured at 50mV and 75mV			0.3	%
		T_A = -40ºC to 105ºC, CS_DS[1:0] = 01, measured at 50mV and 75mV			0.3	%
Offset_cs_room_uncal	Input referred offset error of CS ADC @ 25ºC, it could be single temp piont calibrated out	T_A = 25ºC, CS_DS[1:0] = 01, short SRP/SRN at pins	-6		6	µV
Offset_cs_drift	Input referred offset error drift over temperature	T_A = -40ºC to -20ºC, CS_DS[1:0] = 01, short SRP/SRN at pins	-2.5		2.5	µV
		T_A = -20ºC to 105ºC, CS_DS[1:0] = 01, short SRP/SRN at pins	-1.8		1.8	µV
Reference Voltages						
V_{REFH}	REFHP to REFHM voltage		4.975	5	5.025	V
HW Voltage Comparator/Protector (CELL OV/UV)						
$V_{OV_COMP_RANGE}$	OV comparator detection threshold setting range (not accuracy)	Step of 25mV	2700		3000	mV
		Step of 25mV	3600		3800	mV
		Step of 25mV	4175		4500	mV
$V_{OV_COMP_HYS}$	OV comparator hysteresis after detection			50		mV
$V_{OV_COMP_ACC}$	OV comparator accuracy	T_A = -20ºC to 65ºC	-24		24	mV
		T_A = -40ºC to 105ºC	-28		28	mV
$V_{UV_COMP_RANGE}$	UV comparator detection threshold setting range (not accuracy)	Step of 50mV	1200		3100	mV
$V_{UV_COMP_HYS}$	UV comparator hysteresis after detection			50		mV
$V_{UV_COMP_ACC}$	UV comparator accuracy	T_A = -20ºC to 65ºC	-35		35	mV
		T_A = -40ºC to 105ºC	-50		50	mV
HW Temperature Comparator/Protector (NTC OT/UT)						
$V_{OT_COMP_RANGE}$	OT comparator detection threshold setting range (not accuracy)	Step of 1%, ratiometric with respect to TSREF	10		39	%
$V_{OT_COMP_HYS}$	OT comparator hysteresis after detection			2		%
$V_{OT_COMP_ACC}$	OT comparator accuracy		-0.5		0.5	%
$V_{UT_COMP_RANGE}$	UT comparator detection threshold range	Step of 2%, ratiometric with respect to TSREF	66		80	%
$V_{UT_COMP_HYS}$	UT comparator hysteresis after detection			2		%
$V_{UT_COMP_ACC}$	UT comparator accuracy		-0.5		0.5	%
Digital I/Os (TX, RX, GPIO, SPI CONTROLLER)						
V_{OH}	Output as logic level high (TX, GPIO as output)	GPIO is configured as output. I_{OUT} = 1mA	V_{CVDD}-0.3			V
V_{OL}	Output as logic level low (TX, NFAULT, GPIO as output)	GPIO is configured as output. I_{OUT} = 1mA			0.3	V
V_{IH}	Input as logic level high (RX, GPIO as fault input)	GPIO is configured as input. I_{OUT} = 1mA	0.75 x V_{CVDD}			V
V_{IL}	Input as logic level low (RX, GPIO as fault input)	GPIO is configured as input. I_{OUT} = 1mA			0.25 x V_{CVDD}	V
R_{WK_PU}	GPIO weak pull-up resistance		20	37	60	KΩ

Copyright © 2023 Texas Instruments Incorporated

7.5 Electrical Characteristics (continued)

over operating -40℃ to 125℃ free-air temperature range, VBAT = 9V to 32V (unless otherwise noted)

PARAMETER		TEST CONDITIONS	MIN	TYP	MAX	UNIT
R_{WK_PD}	GPIO weak pull-down resistance		20	40	60	KΩ

7.6 Timing Requirements

over operating -40℃ to 125℃ free-air temperature range, VBAT = 9V to 32V (unless otherwise noted)

PARAMETER		TEST CONDITIONS	MIN	NOM	MAX	UNIT
POWER STATE TIMING						
$t_{SU(WAKE_SHUT)}$	Startup from SHUTDOWN to ACTIVE mode	From the end of WAKE ping to ready to accept UART command		6	10	ms
$t_{SU(SLP2ACT)}$	Startup from SLEEP to ACTIVE mode (with SLEEP2ACTIVE ping/tone) (Not available for standalone device)	From the end of SLEEP2ACTIVE ping to ready to accept UART command			230	µs
$t_{SU(WAKE_SLP)}$	Startup from SLEEP to ACTIVE mode (with WAKE ping/tone)(Not available for standalone device)	From the end of WAKE ping to ready to accept UART command			1	ms
t_{SLP}	From ACTIVE to SLEEP mode	From receiving SLEEP entry condition to enter in SLEEP mode			100	µs
t_{SHTDN}	From ACTIVE to SHUTDOWN mode	From receiving SHUTDOWN entry condition to enter in SHUTDOWN mode (all LDOs in 10% of their norminal value)		20		ms
t_{RST}	Reset time during ACTIVE mode	CONTROL1[SOFT_RST] = 1 is sent to a completion of the digital reset			1	ms
t_{HWRST}	The time device will be in HW reset, after HW reset ping/tone issued				75	ms
SUPPLIES TIMING						
t_{TSREF_ON}	TSREF ramp up time (10%-90%)	C_{TSREF} = 1µF	6			ms
t_{TSREF_OFF}	TSREF ramp down time (90%-10%)	C_{TSREF} = 1µF			8	ms
PING SIGNAL TIMING						
t_{HLD_WAKE}	WAKE ping low time on RX pin; no external load on CVDD		2		2.5	ms
t_{HLD_SD}	SHUTDOWN ping low time on RX pin; no external load on CVDD		7		10	ms
$t_{UART(StA)}$	SLEEPtoACTIVE ping low time on RX pin		250		300	µs
t_{HLD_HWRST}	HW_RESET ping low time on RX pin		36			ms
MAIN and AUX ADC TIMING						
t_{SAR_CONV}	Single conversion time (both Main and AUX ADCs)			8		µs
$t_{MAIN_ADC_CYCLE}$	Single round robin cycle (Main ADC)			192		µs
$t_{AUX_ADC_CYCLE}$	Single round robin cycle (AUX ADC)			192		µs
t_{AFE_SETTLE}	Analog front end (Level shifters) settling time whenever device enter ACTIVE mode from SLEEP or SHUTDOWN			4		ms
t_{CS_SETTLE}	CS ADC settling time			62		µs
$t_{CS_REFRESH}$	Continious mode refresh rate	CS_DS[1:0] = 11		4.096		ms
$t_{CS_REFRESH}$	Continious mode refresh rate	CS_DS[1:0] = 10		1.024		ms
$t_{CS_REFRESH}$	Continious mode refresh rate	CS_DS[1:0] = 01		0.512		ms
$t_{CS_REFRESH}$	Continious mode refresh rate	CS_DS[1:0] = 00		0.256		ms

Copyright © 2023 Texas Instruments Incorporated

7.6 Timing Requirements (continued)

over operating -40℃ to 125℃ free-air temperature range, VBAT = 9V to 32V (unless otherwise noted)

PARAMETER		TEST CONDITIONS	MIN	NOM	MAX	UNIT
t_{CS_CONV}	Single conversion time on CS ADC	CS_DS[1:0] = 11		12.350		ms
		CS_DS[1:0] = 10		3.134		ms
		CS_DS[1:0] = 01		1.598		ms
		CS_DS[1:0] = 00		0.83		ms
t_{ADC_ACC}	This includes mux round robin, ADC conversions, and digital filters.		-1.5		1.5	%
BALANCING TIMING						
t_{BAL_ACC}	Balancing timer accuracy		-5		5	%
HW COMPARATORS/PROTECTORS TIMING						
t_{OV_CYCLE}	OV round robin cycle			8		ms
t_{UV_CYCLE}	UV round robin cycle			8		ms
$t_{OVUV_BIST_CYCLE}$	OV and UV BIST cycle		21.8	23	24.2	ms
t_{OT_CYCLE}	OT round robin cycle			4		ms
t_{UT_CYCLE}	UT round robin cycle			4		ms
$t_{PWR_BIST_CYCLE}$	Time needed for the power supply BIST to complete after the power BIST go command		10.9	11.5	12.1	ms
$t_{OTUT_BIST_CYCLE}$	OT and UT BIST cycle		19	20	21	ms
$t_{HW_COMP_ACC}$	OV,UV,OT,UT comparators timing accuracy		-5		5	%
I/O TIMING (TX, RX, GPIO, NFAULT)						
t_{RISE}	Rise Time	V_{CVDD} > MIN V_{CVDD}, C_{LOAD} = 150pF, GPIO in output mode		12		ns
t_{FALL}	Fall Time (exclude NFAULT)	V_{CVDD} > MIN V_{CVDD}, C_{LOAD} = 150pF, GPIO in output mode		7		ns
t_{FALL_NFAULT}	Fall Time on NFAULT	V_{CVDD} > MIN V_{CVDD}, C_{LOAD} = 150pF, R_{PULLUP} = 10kΩ		100		ns
UART TIMING						
$UART_{BAUD}$	UART TX/RX Baud Rate			1		Mbps
$UART_{ERR_BAUD(RX)}$	UART RX baud rate error - requirement on the external host		-1		1	%
$UART_{ERR_BAUD(TX)}$	UART TX baud rate error		-1.5		1.5	%
$t_{UART(CLR)}$	UART Clear low time		15		20	bit period
$t_{UART(RX_HIGH)}$	After COMM CLEAR, wait this time before sending new frame		1			bit period
OTP NVM TIMING						
t_{CRC_CUST}	Time to complet a single cycle of CRC check on the customer OTP space			175		µs
t_{CRC_FACT}	Time to complet a single cycle of CRC check on the factory OTP space			1.6		ms
SPI CONTROLLER TIMING						
f_{SCLK}	SCLK frequency		450	500	550	kHz
t_{HIGH}, t_{LOW}	SCLK duty cycle			50		%
$t_{CS(HIGH)}$	CS HIGH latency time. Time from register write high to CS pin high			4		µs
$t_{CS(LOW)}$	CS LOW latency time. Time from register write low to CS pin low			4		µs

Copyright © 2023 Texas Instruments Incorporated

7.6 Timing Requirements (continued)

over operating -40℃ to 125℃ free-air temperature range, VBAT = 9V to 32V (unless otherwise noted)

PARAMETER		TEST CONDITIONS	MIN	NOM	MAX	UNIT
$t_{SU(POCI)}$	POCI input data setup time - requirement for slave device	POCI stable before SCLK transition	100			ns
$t_{HD(POCI)}$	POCI input data hold time	POCI stable after SCLK transition		0		ns
OSCILLATOR						
f_{HFO}	High frequency oscillator		31.52	32	32.48	MHz
f_{LFO}	Low frequency oscillator		248.9	262	275.1	kHz

Copyright © 2023 Texas Instruments Incorporated

7.7 Typical Characteristics

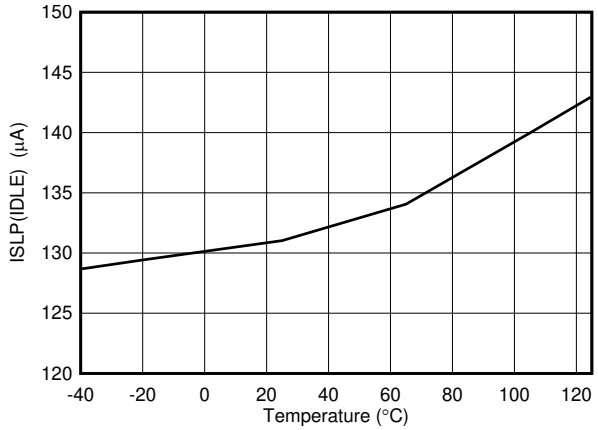

Figure 7-1. ISLP (IDLE) vs Temperature

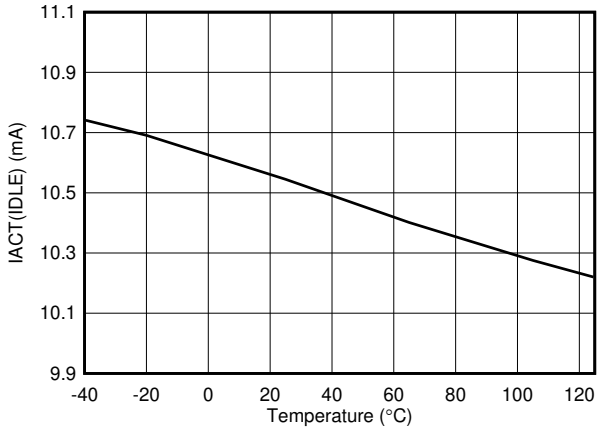

Figure 7-2. IACT (IDLE) vs Temperature

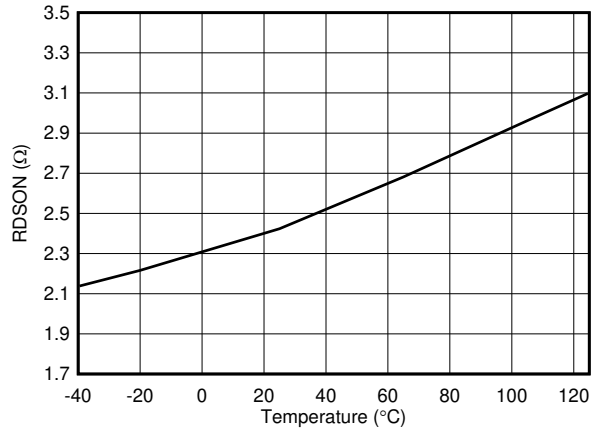

Figure 7-3. CBFET RDSON vs Temperature

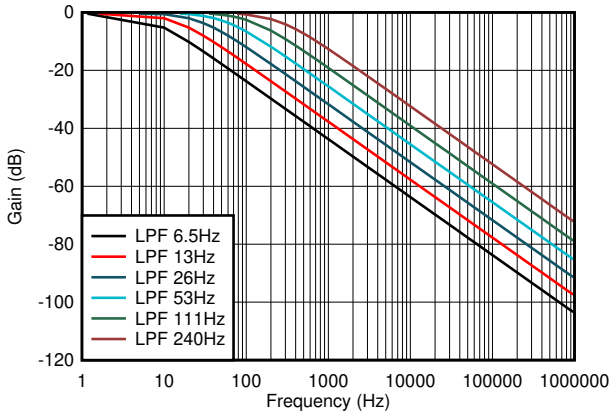

Figure 7-4. Digital Low Pass Filter

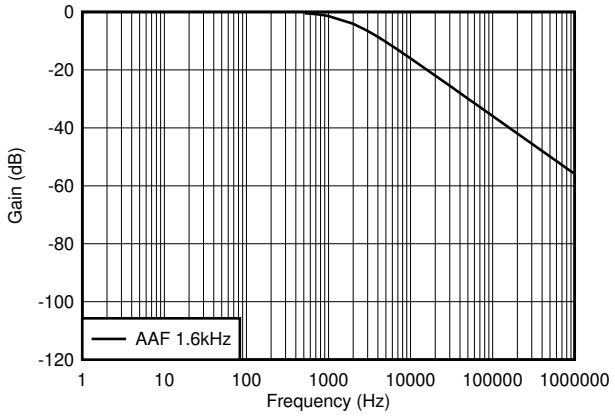

Figure 7-5. MAIN ADC Filter

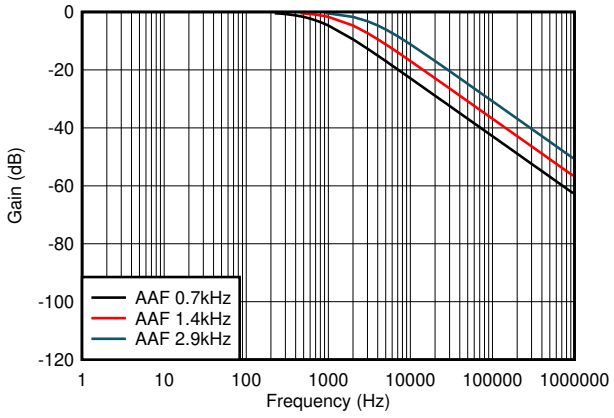

Figure 7-6. AUX ADC Filter

Copyright © 2023 Texas Instruments Incorporated

8 Detailed Description

8.1 Overview

The BQ756506-Q1 device is standalone battery monitor that measures cell voltages, temperature, and current. The device supports 4 series-connected (4S) battery cells with two extra channels to extend for 6 series (6S) cell measurements.

The device is ASIL-D compliant on voltage, temperature, current measurements, and communication. All cell voltages are measured within 128 µs. Each cell sensing channel is included with a post-ADC digital low-pass filter (LPF) for noise reduction as well as providing moving average measurement results. The device has 8 GPIOs, all of which are configurable for NTC thermistor connections. The GPIOs can be used for fuse and relay diagnostics. All 8 GPIOs can be measured within 1.6 ms. An SPI controller is available through GPIO configuration. The device has multiple fault detections. The NFAULT pin can be triggered to alert the MCU when a fault condition is detected.

The device supports passive balancing through an internal cell balancing MOSFET (CBFET) for each cell. The balancing function runs autonomously without microcontroller (MCU) interaction. It includes an option to pause and then resume balancing based on a programmable threshold detected by the external thermistor or if the die temperature is too high (greater than 105°C). Once balancing starts, the device tracks the balancing time on each cell. MCU can read out the remaining balancing time at any time.

The device includes a hardware OVUV comparator and an OTUT comparator with user configurable thresholds. These can be used as a second-level protector for cell over and undervoltage and thermistor over- and undertemperature detections independent of ADC measurements.

The device has SLEEP and SHUTDOWN modes for lower power consumption. All functions work in ACTIVE mode, balancing and hardware comparators for OVUV and OTUT also work in SLEEP mode. While in SHUTDOWN, all active functions are turned off. A HW reset function is available and can be activated by the host MCU. The HW reset provides a POR-like event to the device without actual battery removal. This provides a reliable, low cost, and recoverable option to improve overall system robustness.

Copyright © 2023 Texas Instruments Incorporated

8.2 Functional Block Diagram

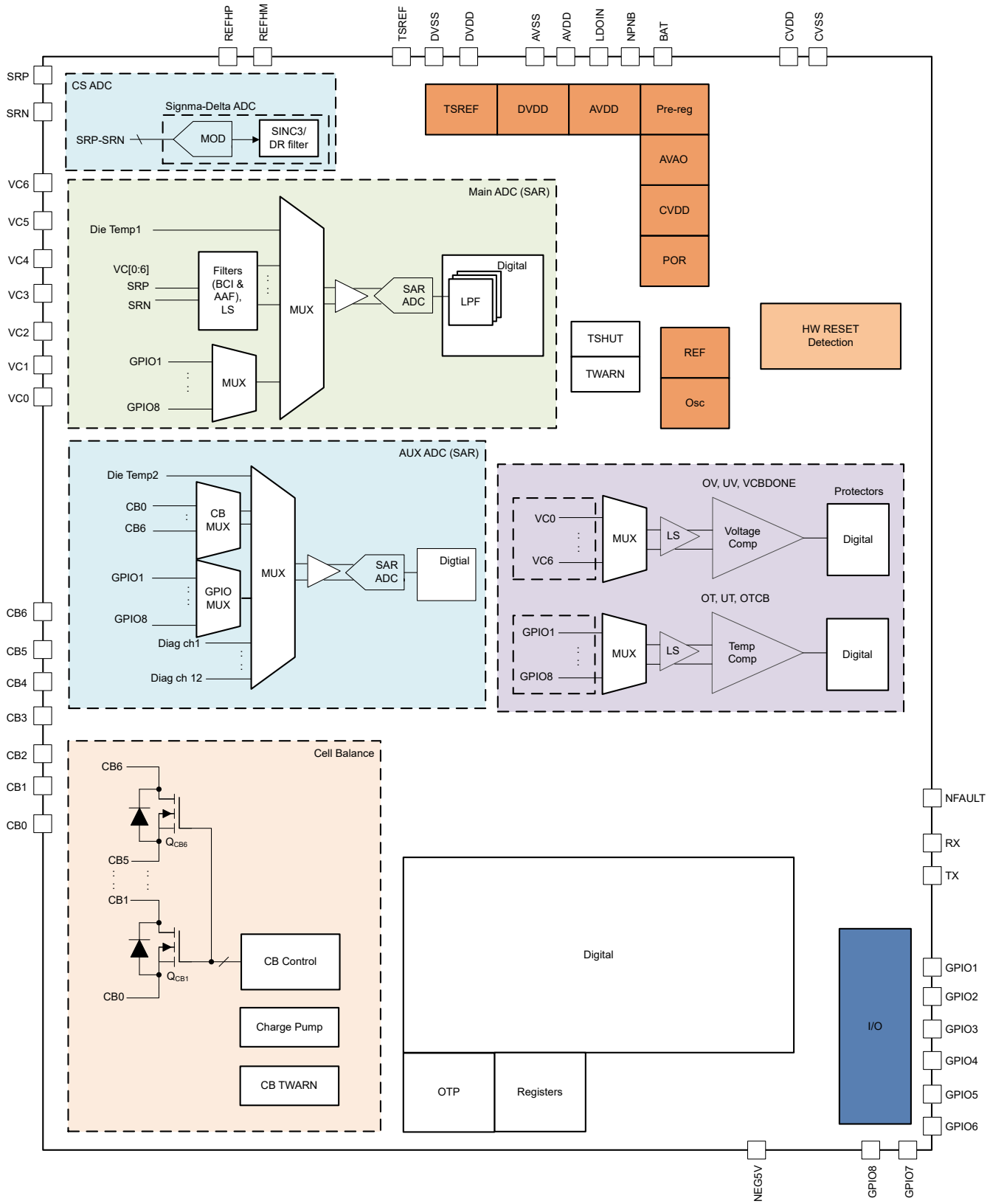

8.3 Feature Description

8.3.1 Power Supplies

The device generates directly from the battery stack all required supplies for its operation. The following subsections provide an overview of each internal supply block. See Section 9 for recommended component connection. See Section 8.3.6.4 for diagnostic control and fault detection on the power supplies block.

8.3.1.1 AVAO_REF and AVDD_REF

The AVAO_REF block (analog voltage always on) is powered from the BAT pin. It powers the always-on low-current circuits that are required for all power modes. This block also generates a preregulated reference, AVAO_REF. The AVAO_REF voltage passes through a load switch controlled by the SHUTDOWN mode. The reference voltage after the load switch is AVDD_REF.

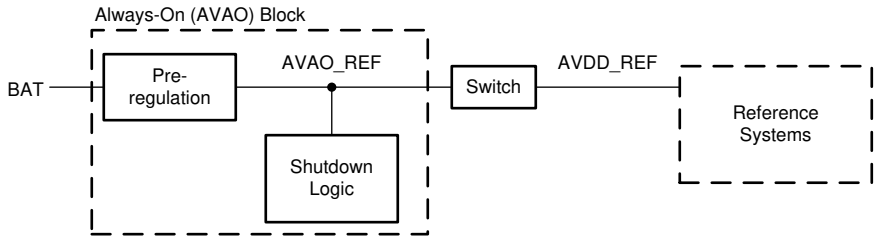

Figure 8-1. AVAO Block

8.3.1.2 LDOIN

The device is powered from the battery module in which the current draw for each cell is the same. From the top of the battery module, the device generates a 6-V regulated voltage (nominal) on the LDOIN pin through the internal linear regulator and an external NPN transistor. The NPNB pin controls the external NPN transistor of the regulator. The LDOIN output is the preregulated input to the rest of the internal low-dropout regulators (LDOs). During OTP (One-Time Programmable) memory programming, the LDOIN pin will be regulated to 8 V (nominal) to supply the programming voltage internally to the OTP programming. The LDOIN is turned off only during HW reset or a POR event.

8.3.1.3 AVDD

The AVDD LDO is the supply for the analog circuits. It takes the input voltage from LDOIN and generates a nominal 5 V. It will not be used to power any external circuit. This LDO is powered down in SHUTDOWN mode, during HW reset, or a POR event.

8.3.1.4 DVDD

The DVDD LDO is the supply for the digital circuits. It takes the input voltage from LDOIN and generates a nominal 1.8 V. It will not be used to power any external circuit. This LDO is powered down in SHUTDOWN mode, during HW reset, or a POR event.

8.3.1.5 CVDD and NEG5V

The CVDD LDO is the supply for the I/O pins (RX, TX, NFAULT, and GPIOs). It takes the input voltage from LDOIN and generates a nominal 5V. Besides providing power for internal usage, this LDO can support an extra 10mA external load in ACTIVE and SLEEP mode, whereas extra 5mA external load in SHUTDOWN mode.

There is a –5V charge pump used for Main ADC blocks. The NEG5V pin has a –4.6V output (nominal). It will be in a low-power burst mode when the device is in SLEEP or SHUTDOWN mode.

8.3.1.6 TSREF

The TSREF is a 5-V buffered reference that can bias the external thermistor circuits, allowing the ADCs to measure temperature and the OTUT protector to detect temperature faults. This reference is measurable by the Main ADC. Both TSREF and GPIO measured by the Main ADC give a ratiometric measurement for best temperature measurement.

Copyright © 2023 Texas Instruments Incorporated

The TSREF is capable of supplying up to I_{TSREF_ILMIT} and will not be used to power any external circuit other than the thermistor bias. The TSREF is off by default and can be enabled or disabled through the *CONTROL2[TSREF_EN]* bit. The startup time of TSREF is determined by the external capacitance. The MCU ensures TSREF is stable before making any GPIO measurement or OTUT protector detection. After enabling TSREF LDO, user shall wait 380µs before sending the next command.

8.3.2 Measurement System

There are two SAR ADCs in the device, a 16-bit Main ADC and a 14-bit AUX ADC; both use a precision reference (REFH) for high-accuracy measurement. Each ADC has its own independent control and can be enabled or disabled separately. The Main ADC is the main measurement for cell voltages (VCELL) and temperature through thermistors connecting to the GPIOs. It also provides TSREF and die temperature measurements. The AUX ADC is mainly used during diagnostic procedures such as providing measurements on internal reference voltages or DAC output of the OVUV and OTUT comparators. It serves as a redundancy measurement for cell voltage inputs and thermistor temperature input through the GPIOs.

A third ADC, 16-bit sigma-delta current sense ADC (CS ADC), is integrated to the device for dedicated current measurement. It is designed to work with a low-side current sense resistor. The current sense ADC measures the voltage drop across the current sense resistor with a full scale range of V_{CS_RANGE}.

The subsections below provide an overview of the Main , AUX and CS ADCs measurement paths. See Section 9 for the recommended external component connection. See Section 8.3.6.4 for the diagnostic control function and status of this block.

8.3.2.1 Main ADC

There are total of 24 inputs (slots) multiplexed to the Main ADC (Figure 8-2). All inputs are measured in round robin fashion (Figure 8-3). Each input takes 8 µs (nominal) to measure and a single round robin cycle completes in 192 µs (nominal). The inputs to the Main ADC are:

- Die temperature 1
- TSREF
- Cell1 to Cell6 voltages through differential VC_{n-1} to VC_n, where n = 1 to 6
- Current sense input through SRP–SRN pins
- Multiplexed GPIO1 through GPIO8
- Spares (RSVD)

All measurements are reported in 16-bit hexadecimal in 2s complement. Results are reported to the corresponding **_HI* (high-byte) and **_LO* (low-byte) registers. First, convert the hexadecimal results to decimal values. Follow the equations in Table 8-1 to translate the result to µV or °C.

When the Main ADC is enabled, all Main ADC-related result registers shown in Table 8-1 are reset to the default value 0x8000. The measured result is populated to the result registers as the main ADC makes its conversion along the round robin cycle. When MCU reads the **_HI* register, the device will pause the data refresh to the associated **_LO* register until that **_LO* register is read.

Table 8-1. Main ADC Measurement Conversion Equations

Main ADC Inputs	Result Registers	Conversion Equations
Die Temperature 1	*DIETEMP1_HI/LO*	Result in °C = $V_{LSB_MAIN_DIETEMP1}$ * Result in decimal 0x0000h is centered to 0°C.
TSREF	*TSREF_HI/LO*	Result in µV = V_{LSB_TSREF} * Result in decimal
Cell1 to Cell6	*VCELL*_HI/LO*, where * = 1 to 6	Result in µV = V_{LSB_ADC} * Result in decimal
Current sense	*CSMAIN_HI/LO*	Result in µV = V_{LSB_CSMAIN} * Result in decimal
GPIO1 to GPIO8	*GPIO*_HI/LO*, where * = 1 to 8	Result in µV = V_{LSB_GPIO} * Result in decimal

Copyright © 2023 Texas Instruments Incorporated

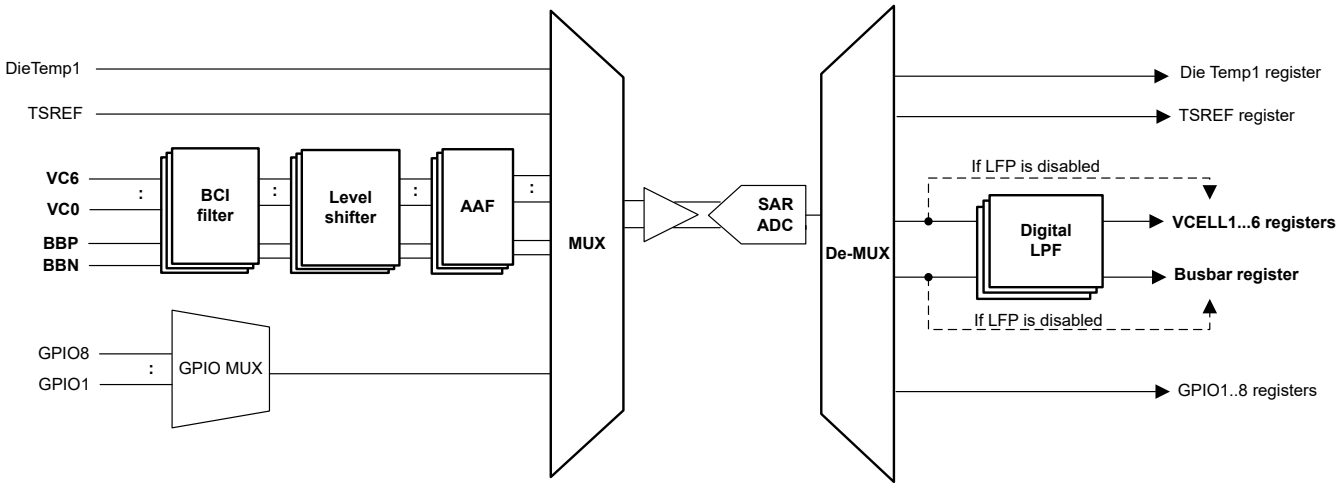

Figure 8-2. Main ADC Measurement Path

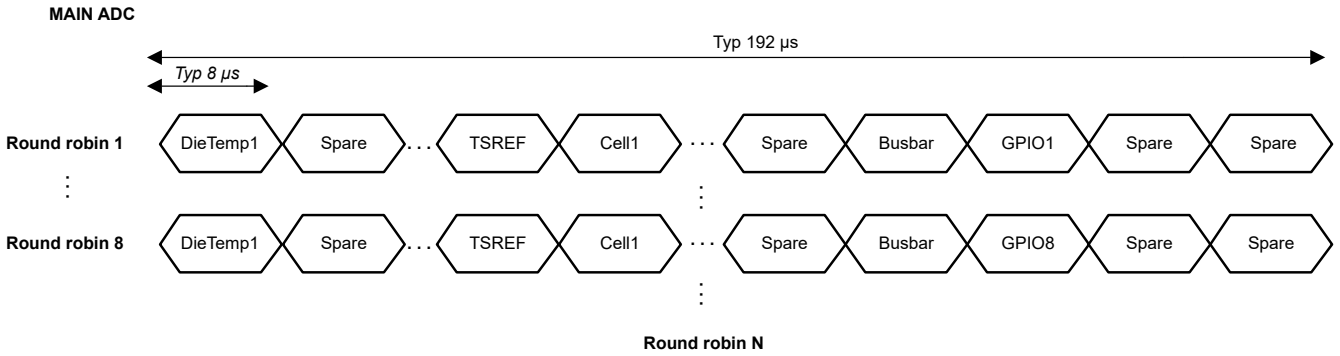

Figure 8-3. Main ADC Round Robin Measurements

8.3.2.1.1 Cell Voltage Measurements

8.3.2.1.1.1 Analog Front End

The cell voltage measurements of the Main ADC are taken from the VC0 through VC6 pins. The device allows a minimum of 4 cells to a maximum of 6 cells to be measured. The VC0 through VC6 pins are connected to the analog front end which consists of a BCI filter, level shifter, and an anti-aliasing filter (AAF) on each VC input channel. The BCI filter has a cutoff frequency (f_{cutoff}) of 100 kHz and the AAF has f_{cutoff} of 1.6 kHz. This filters out high-frequency noise on the VC input before going to the high-voltage multiplexer and measured by the Main ADC. The level shifter block is turned off to save power in SLEEP and SHUTDOWN modes.

8.3.2.1.1.2 VC Channel Measurements

The VC pins are the input channels for cell voltage measurements from the Main ADC measured in the Cell1 to Cell6 slots of the round robin. The round robin timing is always the same even if fewer than 6 cells are connected to the device (Figure 8-4). That is, for the inactive (or unused) VC channel, the device ignores the respective cell slot, but it does not remove the slot from the round robin cycle. This keeps a consistent measurement timing regardless of the cell number configuration. It also provides a consistent sampling time to the post-ADC digital LPF input.

To determine the number of active VCELL channels for ADC measurement, the *ACTIVE_CELL[NUM_CELL3:0]* parameter sets the highest active channel number. The device assumes any VC channel below the setting is also active.

The measurement results are reported in the corresponding *VCELL*_HI* (high-byte) and *VCELL*_LO* (low-byte) registers, where * = 1 to 6. If the digital LPFs are disabled, the result registers are reported with the single ADC

Copyright © 2023 Texas Instruments Incorporated

conversion values; otherwise, the result registers are reported with filtered measurement values. For an inactive VC channel, the respective *_HI* and *_LO* registers remain with the default value 0x8000.

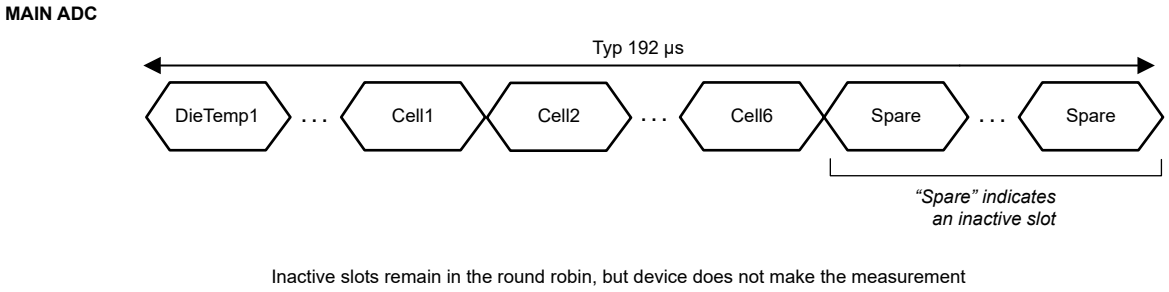

Figure 8-4. Same ADC Round Robin Timing for all Channel Counts

8.3.2.1.1.3 Post-ADC Digital LPF

Each differential VC channel measurement is equipped with a post-ADC LPF. The LPFs have much lower cutoff frequency (f_{cutoff}). There are 7 f_{cutoff} options: 6.5 Hz, 13 Hz, 26 Hz, 53 Hz, 111 Hz, 240 Hz, and 600 Hz, configurable through the *ADC_CONF1[LPF_VCELL2:0]* setting. Once an f_{cutoff} value is selected and the LPFs are enabled by setting *ADC_CTRL1[LPF_VCELL_EN]* = 1, the same f_{cutoff} setting applies to all VC channel measurements.

The differential SRP–SRN measurement also has its own digital LPF, enabled by *ADC_CTRL1[LPF_SR_EN]* bit. The LPF for the current sense channel through the Main ADC path has 7 f_{cutoff} options, configured using *ADC_CONF1[LPF_SR2:0]*.

The digital LPF is implemented as single-pole filter which responds very similarly as an analog RC circuit. This means the Main ADC will be running in continuous mode for the digital LPFs to produce effective filtered results.

The MCU should take into account the digital filter settling time when there is a step change in the input DC voltage level. Equation below gives a typical estimate of digital filter settling time to hit settling accuracy threshold for a step in VC voltage.

Digital Filter Settling Time ~ [({log10 (Settling Accuracy Threshold [mV] / Voltage Step in Input Voltage [mV])} / {log10(1 - Filter Coefficient)}) - 1] x 0.192 ms

Fcutoff (Hz)	**600**	**240**	**111**	**53**	**26**	**13**	**6.5**
Filter Coefficient	0.5	0.25	0.125	0.0625	0.03125	0.015625	0.007813

For example: If VC step by 15mV, and user has to accommodate ~27-ms settling time to within 1 LSB of input step for 26-Hz LPF setting.

When the LPF starts, from disabled to enabled state, it jumps to its first input value and starts the filtering from that point. As compared to starting from 0 V or some mid-level voltage, this implementation allows a fast settling time for Main ADC and LFP is just starting.

8.3.2.1.1.4 SRP and SRN Measurements

The SRP and SRN pins are the inputs for current sense measurement from the Main ADC. The intent of this measurement path is to serve as a redundancy current measurement. The SRP/N inputs have the BCI and AAF filters in the front end. This differential current sense measurement path has an option to pass-through a post-ADC digital LPF.

The Main ADC current sense measurement is reported in the *MAIN_CURRENT_HI* (high-byte) and *MAIN_CURRENT_LO* (low-byte) registers. If the digital LPF is disabled, the result registers are reported with the single ADC conversion value; otherwise, the result is reported in the filtered measurement value.

Copyright © 2023 Texas Instruments Incorporated

8.3.2.1.2 Temperature Measurements

8.3.2.1.2.1 DieTemp1 Measurement

There are 2 die temperature sensors, DieTemp1 and DieTemp2. The DieTemp1 is routed to the Main ADC and it is also used for the Main ADC gain and offset correction internally. The measurement is reported in the *DIETEMP1_HI* (high-byte) and *DIETEMP1_LO* (low-byte) registers. The 0°C measurement is centered to hex value 0x0000h, so a positive value represents a positive temperature and a negative value represents a negative temperature. The measurement is also capped off to +200°C and –100°C.

8.3.2.1.2.2 GPIOs and TSREF Measurements

There are eight GPIOs. All GPIO inputs are available to be used for thermistor connections for temperature measurements and be used as a simple, single-ended, voltage input measurement.

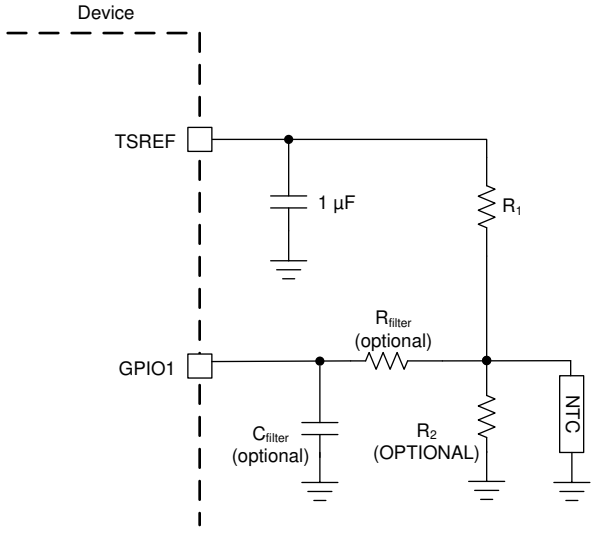

Figure 8-5. Thermistor Connection

Figure 8-5 shows the thermistor circuit when GPIO is enabled for thermistor measurements. MCU ensures TSREF is enabled by setting *CONTROL2[TSREF_EN]* = 1 and settled before taking the measurement value.

The GPIOs are multiplexed to one of the Main ADC MUX inputs. That is, in a single round robin cycle, only one GPIO is measured. To complete all eight GPIO measurements, it takes eight round robin cycles.

To enable the GPIO for ADC measurement, the corresponding *GPIO_CONFn[GPIO*2:0]* (where n = 1 to 4, * = 1 to 8 for the corresponding GPIO) register is configured to ADC input or ADC and OTUT input. For example, to enable GPIO1 for ADC measurement only, set *GPIO_CONF1[GPIO12:0]* to ADC input. See Section 8.3.5 for more details. If a GPIO is not configured for any ADC measurement, the device will ignore the corresponding GPIO slot but does not remove the slot from the round robin cycle. See Figure 8-6 for an example when GPIO2 is configured for non-ADC measurement.

Copyright © 2023 Texas Instruments Incorporated

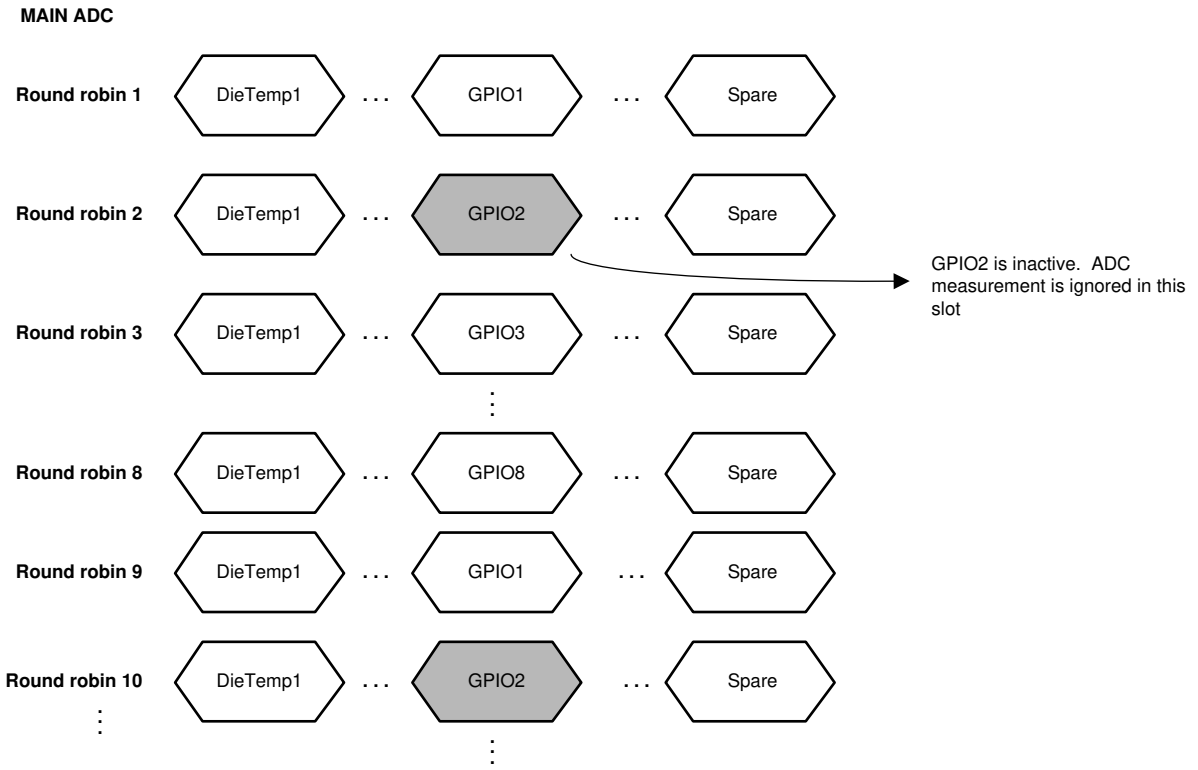

Figure 8-6. GPIO2 Not Configured for ADC Measurement

The measurements are reported in the corresponding *GPIO*_HI* (high-byte) and *GPIO*_LO* (low-byte) registers, where * = 1 to 8. The measurement result is in µV. To achieve better temperature accuracy, the MCU can use a ratiometric measurement by using both TSREF and GPIO measurement with the following formula: (GPIO_ADC/TSREF_ADC) = RNTC/(RNTC + R1), where

- GPIO_ADC = ADC measurement on GPIO
- TSREF_ADC = ADC measurement on TSREF
- RNTC = NTC thermistor resistance
- *ACTIVE_CELL* register: Determine the inactive VC channel(s) and keep the result registers to default value 0x8000.
- R1 is the pull-up resistor as shown in Figure 8-5 with the assumption the R2 is not used

For an inactive GPIO channel, the respective *_HI* and *_LO* registers remain with the default value 0x8000.

8.3.2.1.3 Main ADC Operation Control

8.3.2.1.3.1 Operation Modes and Status

The *ADC_CTRL1[CS_MAIN_GO]* = 1 will start both the Main ADC and the CS ADC. When the device receives the GO command, it first samples the following settings to determine and CS ADC configuration and then operates the and CS ADC accordingly. Any change of the settings below requires the MCU to resend another GO command to implement the new settings.

- *ADC_CTRL1[MAIN_MODE1:0]*: three run modes. See Table 8-2 for details.
- *ADC_CTRL1[LPF_VCELL_EN]*: LPF for VC channels. Set to *ADC_CONF1[LFP_VCELL2:0]* f_{cutoff} if enabled.
- *ADC_CTRL1[LPF_SR_EN]*: LPF for SRP/N channel. Set to *ADC_CONF1[LFP_SR2:0]* f_{cutoff} if enabled.
- *ADC_CONF2[ADC_DLY5:0]*: Delay the start of the Main ADC.
- *ACTIVE_CELL* register: Determine the inactive VC channel(s) and keep the result registers to default value 0x8000.
- *GPIO_CONF1* to *GPIO_CONF4*: Determine the inactive GPIO channel(s) and keep the result registers to default value 0x8000.

Copyright © 2023 Texas Instruments Incorporated

There are two status bits to indicate the Main ADC status:

- *DEV_STAT[MAIN_RUN]*: indicates if the Main ADC is running or not.
- *ADC_STAT1[DRDY_MAIN_ADC]*: set when at least eight round robin cycles have completed indicating all active GPIO channels and all other Main ADC inputs have at least one measurement completed.

Table 8-2. Summary of Main ADC Run Modes

[MAIN_MODE1:0]	Run Mode	Description
0b00	Stop Main ADC	Stop the Main ADC
0b01	8 RR Run (eight round robin cycles)	Main ADC runs for eight round robin cycles then stops. This gives a single measurement on all cell voltages and all GPIO inputs to the system. Filtered measurements are not effective under run mode. For example, use as a quick burst read when MCU is periodically awake during system idle state.
0b10	Continuous Run	Main ADC runs in continuous mode and stops if *[MAIN_MODE1:0]* = 0b00 and a GO is sent. For example, must use this mode if LPF is enabled. Also use in diagnostic operation.

The level shifter is enabled for the number of channels specified in the *ACTIVE_CELL[NUM_CELL3:0]* when device enters ACTIVE mode. MCU shall wait for t_{AFE_SETTLE} time before starting the Main ADC whenever the device enters ACTIVE mode or when *[NUM_CELL3:0]* setting is changed.

The Main and CS ADC operate in ACTIVE mode only. If the ADC is running while the device goes into SLEEP, the Main ADC will be “frozen” (that is, ADC is stopped but device still remembers the operational state). When the device returns to ACTIVE mode without any digital reset event, the Main ADC will restart and continues from its “pre-frozen” state. In this condition, the cell voltage measurements are off during the t_{AFE_SETTLE} time because input voltage to the ADC is not settled yet. MCU can ignore these measurements or send a new GO command to restart the Main ADC after t_{AFE_SETTLE}.

8.3.2.2 AUX ADC

There are a total of 24 inputs (slots) multiplexed to the AUX ADC (Figure 8-7). All inputs are measured in round robin fashion (Figure 8-8). Each input takes 8 µs (nominal) to measure and a single round robin cycle completes in 192 µs (nominal). The inputs to AUX ADC are:

- Die temperature 2
- Multiplexed differential CB_{n-1} to CB_n (AUXCELL1 to AUXCELL6), where n = 1 to 6 and differential current sense input through the SRP to SRN pins.
- MISC measurements:
  - BAT pin
  - REFL, internal reference
  - VBG2, internal bandgap
  - VCM, common voltage on Main ADC
  - AVAO_REF, always-on block reference
  - AVDD_REF
  - OV DAC from OV protector
  - UV DAC from UV protector
  - VCBDONE DAC from UV protector
  - OT or OTCB DAC from OT protector
  - UT DAC from UT protector
- Multiplexed GPIO1 to GPIO8
- Spares (RSVD)

All measurements are reported in 16-bit hexadecimal in 2s complement. Results are reported to the corresponding **_HI* (high-byte) and **_LO* (low-byte) registers. It first converts the hexadecimal results to decimal values. Follow the equations in Table 8-3 to translate the result to µV or °C.

When the AUX ADC is enabled, all AUX ADC related result registers shown in Table 8-3 are reset to the default value 0x8000. The measured result is populated to the result registers as the AUX ADC makes its conversion

Copyright © 2023 Texas Instruments Incorporated

along the round robin cycle. When MCU reads the *_*HI* register, the device will pause the data refresh to the associated *_*LO* register until that *_*LO* register is read.

Table 8-3. AUX ADC Measurement Conversion Equations

AUX ADC inputs	Result Registers	Conversion Equations
Die Temperature 2	*DIETEMP2_HI/LO*	Result in °C = $V_{LSB_AUX_DIETEMP2}$ * Result in decimal Note: 0x0000h is centered to 0°C.
Multiplexed AUXCELL1 to AUXCELL6 and SRP/N channel	*AUX_CELL_HI/LO*, when CB MUX is locked to a single channel	Result in µV = V_{LSB_ADC} * Result in decimal
BAT	*AUX_BAT_HI/LO*	Result in µV = $V_{LSB_AUX_BAT}$ * Result in decimal
REFL	*AUX_REFL_HI/LO*	Result in µV = $V_{LSB_AUX_DIAG}$ * Result in decimal
VBG2	*AUX_VBG2_HI/LO*	
VCM	*AUX_VCM_HI/LO*	
AVAO_REF	*AUX_AVAO_REF_HI/LO*	
AVDD_REF	*AUX_AVDD_REF_HI/LO*	
OV DAC	*AUX_OV_DAC_HI/LO*	
UV_DAC	*AUX_UV_DAC_HI/LO*	
VCBDONE DAC	*AUX_VCBDONE_DAC_HI/LO*	
OT or OTCD DAC	*AUX_OT_OTCD_DAC_HI/LO*	
UT DAC	*AUX_UT_DAC_HI/LO*	
Multiplexed GPIO1 to GPIO8	*AUX_GPIO_HI/LO*	Result in µV = V_{LSB_GPIO} * Result in decimal

Note that SRP/SRN pins are not connected to AUX ADC, if user selects [AUX_CELL_SEL] = 0x01 (SRP-SRN). In this case the user shall ignore the AUX_CELL_HI/LO results

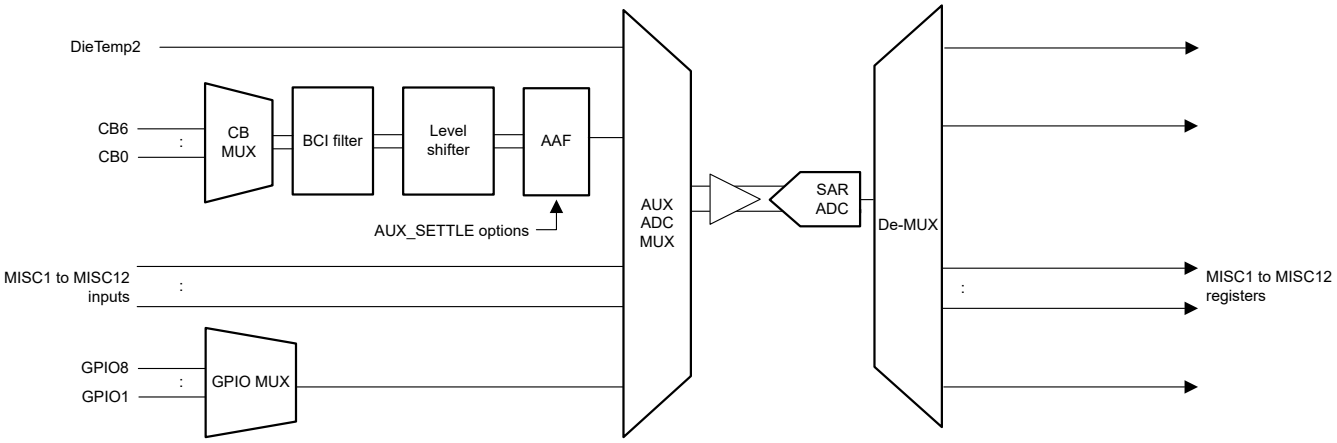

Figure 8-7. AUX ADC Measurement Path

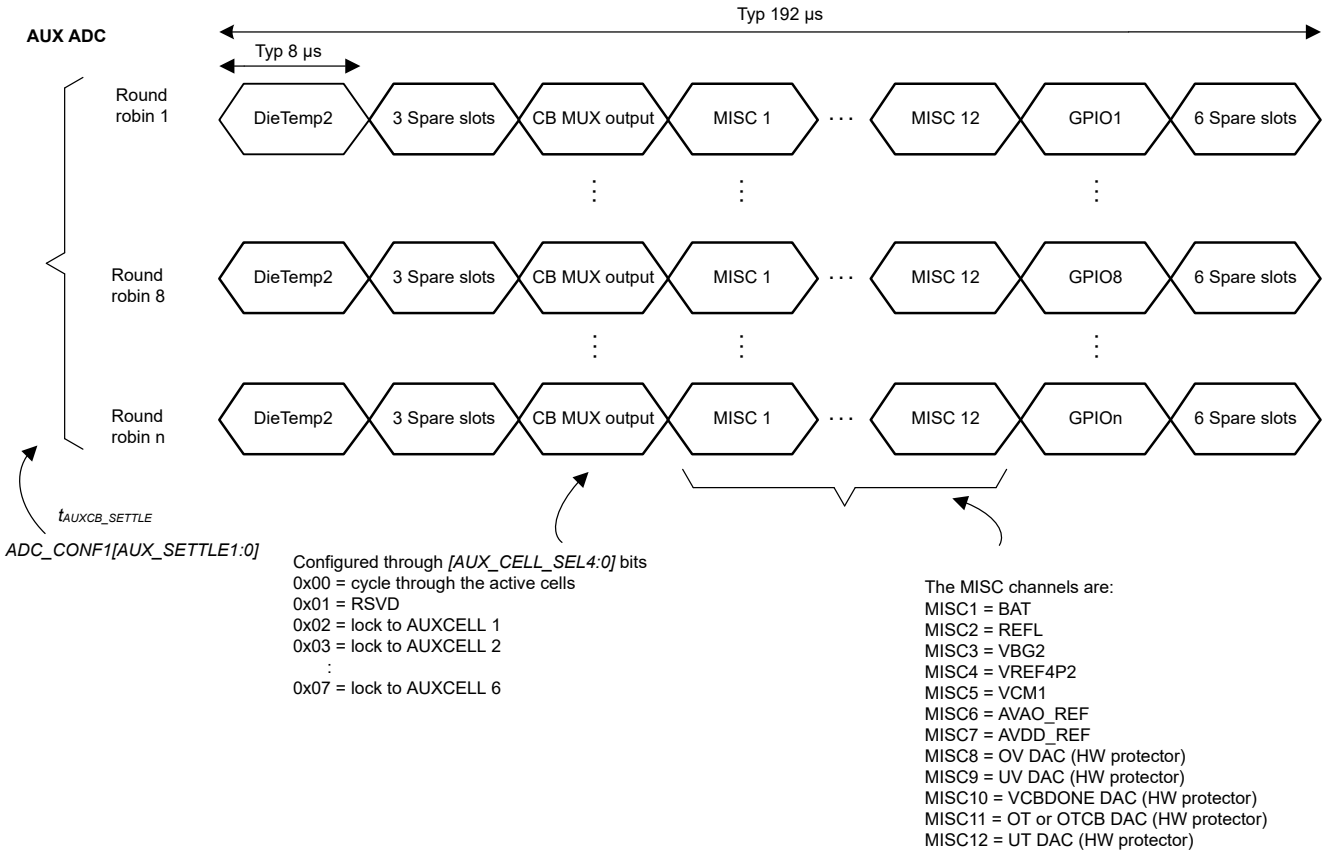

Figure 8-8. AUX ADC Round Robin Measurements

8.3.2.2.1 AUX Cell Voltage Measurements

8.3.2.2.1.1 AUX Analog Front End

The AUX ADC path serves as a redundancy path to the Main ADC measurement on cell voltage measurements and bus bar measurements. It also has the front end filters of a BCI filter and an AAF filter in the AUX ADC path. The AUXCELL channel and current sense channel (taken from SRP and SRN pins) in the AUX path are multiplexed (shown as the CB MUX in Figure 8-7) to share a single BCI filter and AAF filter. The CB MUX output after the front end filters is then going into one of the AUX ADC MUX and to the AUX ADC for measurement.

Because the front end filters are shared, the device has to wait for the AAF filter to settle before making any valid CB channel (AUXCELL) or SRP and SRN channel measurement. The default AAF f_{cutoff} is 1.6 kHz as in the Main ADC path, which translates to additional 4.3ms settling time to complete a single CB channel measurement. The device provides 3 AAF settling time options, 4.3ms (default), 2.3ms, and 1.3ms, configured by the *ADC_CONF1[AUX_SETTLE1:0]* bits. The BCI filter f_{cutoff} is 100 kHz as in the Main ADC path.

8.3.2.2.1.2 CB and Current Sense Channel Measurements

One slot, the CB MUX output slot, is assigned in the AUX ADC round robin cycle for the CB channels (differential CB_{n-1} – CB_n, where n = 1 to 6) and current sense (differential SRP – SRN)channel measurement because these channels are multiplexed to a single input to the AUX ADC multiplexer. For a single CB or current sense channel measurement, it takes multiple round robin cycles because the device has to wait for the AAF settling time as well.

Because of the need to wait for the AAF to settle, the AUX ADC would only measure CB and current sense channels that are active and are selected by the MCU; inactive or unselected channels are skipped.

Active CB channels are determined by the *ACTIVE_CELL[NUM_CELL3:0]* setting. These bits set the highest active channel number.

Copyright © 2023 Texas Instruments Incorporated

MCU can control which CB and current sense channels to be measured through the AUX ADC. The *ADC_CTRL2[AUX_CELL_SEL4:0]* gives the options to run through all the active CB channel and current sense channels or to lock to a single CB channels or lock to the current sense channel.Figure 8-9 shows the example of how the AUXCELL slot is implemented with different *[AUX_CELL_SEL4:0]* setting.

It is recommend to run AUX ADC in continuous mode and all AUX ADC to measure through all the active CB channel once. This enables the device to reduce the common mode error in AUX ADC measurement. MCU shall perform this procedure before running ADC comparison related diagnostic or locking to a single CB or current sense channel measurement.

There is no post-ADC LPF in the AUX ADC path. When the AUX ADC measurements are used during diagnostics, the AUX CELL (CB channel) measurements are compared against the Main ADC prefiltered measurements. While the device performs VCELL (from Main ADC) to AUX CELL (from AUX ADC) measurement comparison internally. See Section 8.3.6.4 for more details.

The device makes the CB or current sense channel measurement available to read only when the *[AUX_CELL_SEL4:0]* bits are set to lock on a single CB (must be active) or current sense channel. The measurement is reported in the *AUX_CELL_HI* (high-byte) and *AUX_CELL_LO* (low-byte) registers. The result registers will be updated after the AAF settling time is passed. For any other conditions, including lock to an inactive CB channel, the result registers remain with the default value 0x8000.

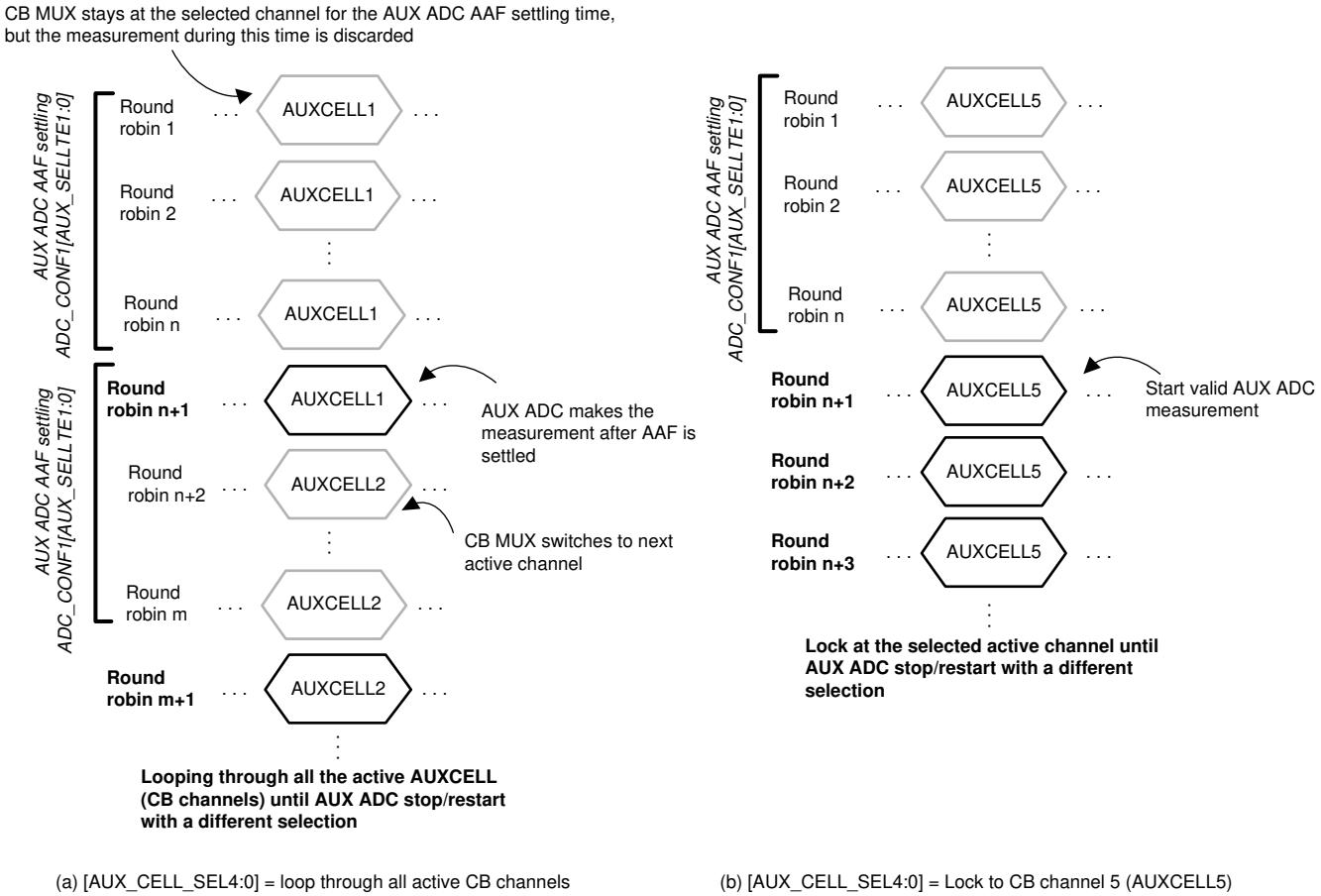

(a) [AUX_CELL_SEL4:0] = loop through all active CB channels

(b) [AUX_CELL_SEL4:0] = Lock to CB channel 5 (AUXCELL5)

Figure 8-9. CB MUX Output Slot with Different *[AUX_CELL_SEL4:0]* Setting

8.3.2.2.2 AUX Temperature Measurements

8.3.2.2.2.1 DieTemp2 Measurement

There are 2 die temperature sensors, DieTemp1 and DieTemp2. The DieTemp2 is routed to the AUX ADC and is also used for the AUX ADC gain and offset correction internally. The measurement is reported in the

DIETEMP2_HI (high-byte) and *DIETEMP2_LO* (low-byte) registers. The 0°C measurement is centered to hex value 0x00, so a positive value represents positive temperature and a negative value represents negative temperature. The measurement is also capped off to +200°C and –100°C.

8.3.2.2.2.2 AUX GPIO Measurements

The AUX GPIO path is the same as the main GPIO path. All eight GPIOs are multiplexed to a single AUX ADC MUX input. There is only one GPIO slot in the AUX ADC round robin cycle. That is, in a single AUX ADC round robin cycle, only one GPIO will be measured. To complete all eight GPIO measurements, it takes eight round robin cycles. If GPIO is connected to the thermistor network, the MCU enables TSREF by setting *CONTROL2[TSREF_EN]* = 1 and ensures TSREF is stable before starting the AUX ADC measurement.

When AUX ADC is enabled, the GPIO slot in the 1st round robin cycle is GPIO1, 2nd round robin cycle is GPIO3, and so on. For the AUX ADC to make a measurement on a GPIO, the GPIO must be configured as ADC input or ADC and OTUT input in the corresponding *GPIO_CONFn[GPIO*2:0]* bits, where n = 1 to 4, * = 1 to 8 for the respective GPIO channel. See Section 8.3.5 for more details. If the GPIO is inactive for the ADC measurement, the device ignores the corresponding GPIO slot but does not remove the slot from the AUX ADC round robin cycle.

By default, the AUX ADC loops through all GPIO channels and the measurements do not report out to the result registers. However, if MCU locks to a single GPIO channel, the locked GPIO measurement is reported to the *AUX_GPIO*_HI* (high-byte) and *AUX_GPIO*_LO* (low-byte) registers. This channel lock can be set by the *ADC_CTRL3[AUX_GPIO_SEL3:0]* bits. The result registers will report a GPIO measurement if *[AUX_GPIO_SEL3:0]* is locked to single GPIO channel, any other condition will show default value 0x8000.

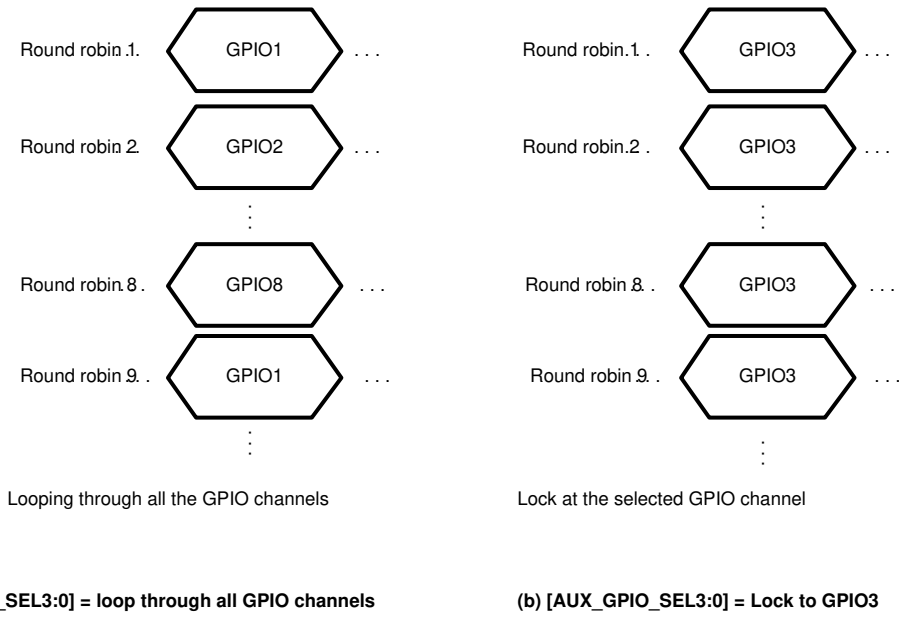

(a) [AUX_GPIO_SEL3:0] = loop through all GPIO channels **(b) [AUX_GPIO_SEL3:0] = Lock to GPIO3**

Figure 8-10. GPIO Slot with Different *[AUX_GPIO_SEL3:0]* Setting

8.3.2.2.3 MISC Measurements

There are 12 MISC measurements listed at the beginning of the AUX ADC section. When the AUX ADC is enabled, these inputs are measured in every round robin cycle. Table 8-3 shows the corresponding result registers.

The DAC inputs of the OVUV and OTUT protectors reflect the real-time DAC values of the device which shows the OVUV and OTUT detection or recovery threshold currently in use in the protectors. It is normal to observe a change of the DAC measurements if there are unused channels or if any cell or GPIO channels detect a fault. See Section 8.3.4 for description of the protector architecture and see Section 8.3.6.4 for the protector DAC measurement configuration.

Copyright © 2023 Texas Instruments Incorporated

8.3.2.2.4 AUX ADC Operation Control

To start the AUX ADC, the host MCU sets *ADC_CTRL3[AUX_GO]* = 1. When the device receives the GO command, it first samples the following settings to determine the AUX ADC configuration, then operates the AUX ADC accordingly. Any change to the settings below requires the MCU to send another GO command to implement the new settings.

- *ADC_CTRL3[AUX_MODE1:0]*: Four run modes. See Table 8-4 for details.
- *ADC_CTRL2[AUX_CELL_SEL4:0]*: Selects which CB channels are measured by AUX ADC.
- *ADC_CONF1[AUX_SETTLE1:0]*: Configures the AUX ADC AAF settling time.
- *ADC_CTRL3[AUX_GPIO_SEL3:0]*: Selects which GPIO channels are measured by AUX ADC.
- *ACTIVE_CELL* register: Determines the inactive CB channel(s).
- *GPIO_CONF1* to *GPIO_CONF4*: Determines the inactive GPIO channel(s).

There are four status bits to indicate the AUX ADC status:

- *DEV_STAT[AUX_RUN]*: indicates if the AUX ADC is running or not.
- *ADC_STAT1[DRDY_AUX_MISC]*: set when all MISC inputs are measured at least once.
- *ADC_STAT1[DRDY_AUX_CELL]*: set when the CB channels selected by *[AUX_CELL_SEL4:0]* are measured at least once.
- *ADC_STAT1[DRDY_AUX_GPIO]*: set when all GPIO channels (active or inactive) have been measured once. Inactive channel measurements will be ignored by the device.

Table 8-4. Summary of AUX ADC Run Modes

[AUX_MODE1:0]	Run Mode	Description
0b00	Stop AUX ADC	Stop the AUX ADC
0b01	Single Run (1 round robin cycle)	AUX ADC runs for one round robin cycle then stops. This gives a single measurement on all MISC inputs. For example, use as a quick burst read for just the MISC inputs without the need to issue a stop command to the AUX ADC.
0b10	Continuous Run	AUX ADC runs in continuous mode and stops if *[AUX_MODE1:0]* = 0b00 and a GO command is sent. For example, must use this mode when ADC diagnostic comparison operation is used. See Section 8.3.6.4 for details.
0b11	8 RR Run (eight round robin cycles)	AUX ADC runs for eight round robin cycles then stops. This gives a single measurement on all active GPIO inputs.

The AUX ADC operates in ACTIVE mode only. If the ADC is running while the device goes into SLEEP mode, the AUX ADC will be “freezed”; that is, the ADC stops but the device still remembers the operational state. When the device returns to ACTIVE mode without any digital reset event, the AUX ADC will restart and continue from its “prefreeze” state.

8.3.2.3 Synchronization Between MAIN and AUX ADC Measurements

The device aligns AUX cell time slot number 5 with the target VC channel slot on MAIN cell. DieTemp2 starts without any delay, and AUX cell CB MUX slot #5 moves dynamically accordingly to match the selected MAIN cell and the remaining AUX ADC slots adjust accordingly. This ensures that there is no time skew between MAIN VC and AUX CB ADCs sampling. This feature helps improve the ASIL-D accuracy significantly.

Copyright © 2023 Texas Instruments Incorporated

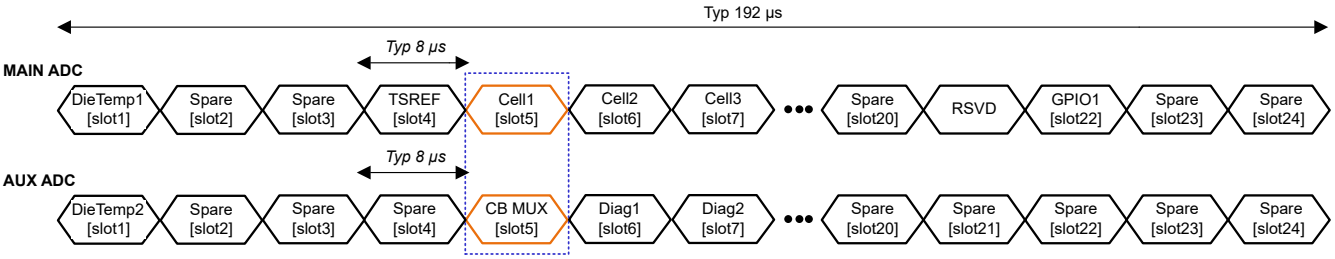

a) [AUX_CELL_SEL] = 00h – Running all active cell channels set by ACTIVE_CELL_CONF register. Ch1 conversion.

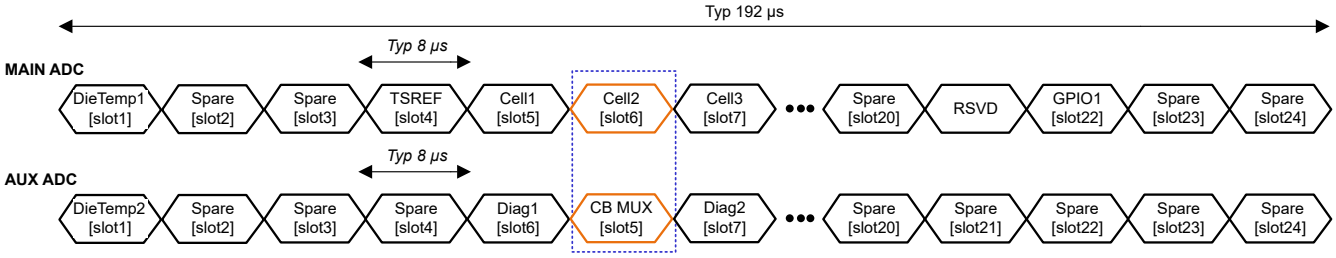

b) [AUX_CELL_SEL] = 00h – Running all active cell channels set by ACTIVE_CELL_CONF register. Ch2 conversion.

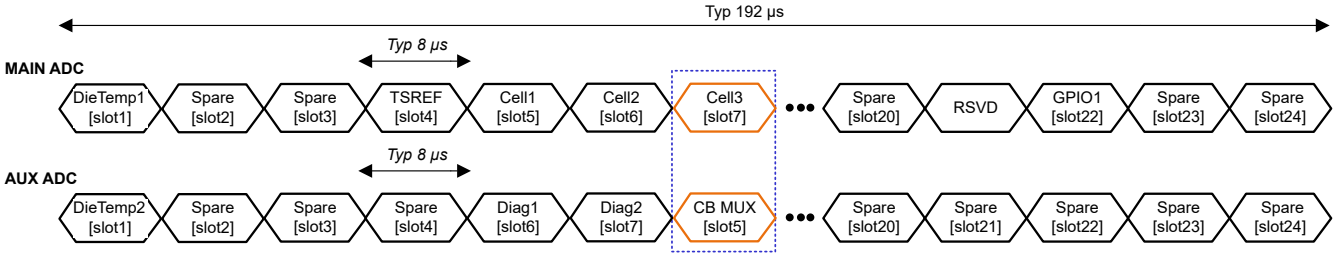

c) [AUX_CELL_SEL] = 04h – Lock to AUX CELL 3. Ch3 conversion.

Figure 8-11. Synchronization Between MAIN and AUX ADC Sampling

8.3.2.4 CS ADC

The CS ADC is a high accuracy Delta-Sigma ADC with a SINC3 filter, dedicated for current sensing. It is used as divided down precision reference. The same precision reference is also used by the Main and AUX ADCs. The CS ADC block measures current by directly sensing the differential voltage across a sense resistor connecting between SRP and SRN pins. The CS ADC supports only low side sense resistor. The full scale ADC input range is -125mV to +125mV. If current sense ADC input is larger than Full Scale input voltage/ 125mV, CURRENT_HI/MID/LOW would be clamped around 75mV output reading. To verify, user could read MAIN_CURRENT_HI/LO.

The decimation ratio (DR) directly correlates to how quickly a conversion result is available to be read from the ADC. Lower DR corresponds to faster conversion time and lower effective number of bits (ENOB). The DR setting is controlled by *ADC_CTRL1[CS_DR1:0]*. The CS ADC shares the same start and mode control bits as the Main ADC located in ADC_CTRL1 register. Both the Main and CS ADCs stop together. Such design is to allow better voltage and current measurement alignment.

The measurement is reported in 24-bit hexadecimal in 2s complement. Results are reported to the corresponding *CURRENT_HI* (high-byte), *CURRENT_MID* (mid-byte) and *CURRENT_LO* (low-byte) registers. It first converts the hexadecimal results to decimal values. Convert the result to µV, where Result in µV = V_{LSB_CS}. Result in decimal.

Copyright © 2023 Texas Instruments Incorporated

After receiving the GO command, the CS ADC start its first conversion after t_{CS_SETTLE}. Since the CS ADC is using a SINC3 filter, the first conversion takes t_{CS_CONV} time to complete, but any subsequence conversion takes (t_{CS_CONV} / 3) time to complete. If MCU needs to catch every current measurement conversion, GPIO1 has an option to toggle low every time a CS ADC conversion is completed, the pin returns high when MCU read *CURRENT_HI* register. This signal can be used as an interrupt to the MCU to avoid missing a conversion. This function is enabled by setting *GPIO_CONF2[CS_RDY_EN]* = 1.

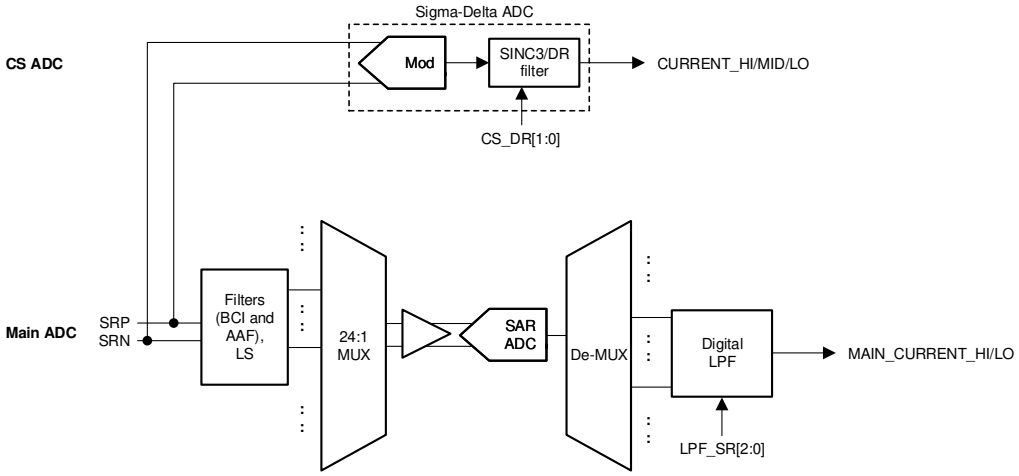

Figure 8-12. CS ADC

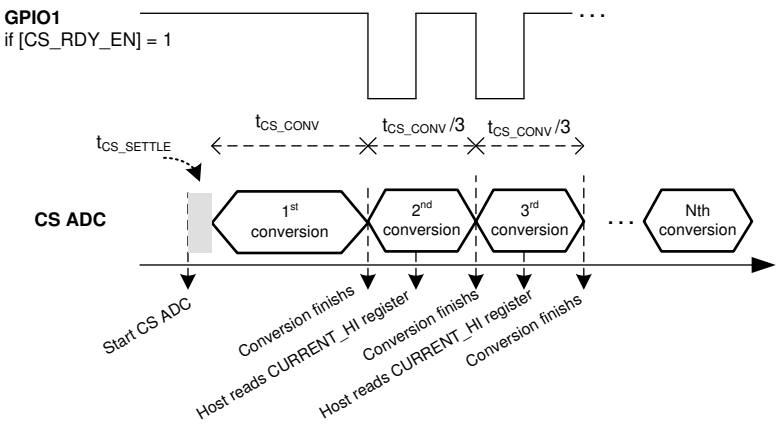

Figure 8-13. CS ADC Measurement

8.3.3 Cell Balancing

The device integrates internal cell balancing MOSFET (CBFET) across each CB channel to enable passive cell balancing. The balancing current is determined by the cell voltage, the external resistor in series with the CB pin, and the internal CBFET Rdson, R_{DSON} parameter. The following equations calculate the effective balancing current with or without adjacent CBFETs being on. Cell balancing can run in ACTIVE or SLEEP mode.

- Balancing with no consecutive CBFET on (Figure 8-14 (a)): I_{CB} = VCell / ((2 × R_{CB}) + $Rdson_{QCB}$)
- Balancing with two consecutive CBFETs on (Figure 8-14 (b)): I_{CB} = (Sum of two VCELL) / ((2 × R_{CB}) + $Rdson_{QCBn}$ + $Rdson_{(QCBn-1)}$)

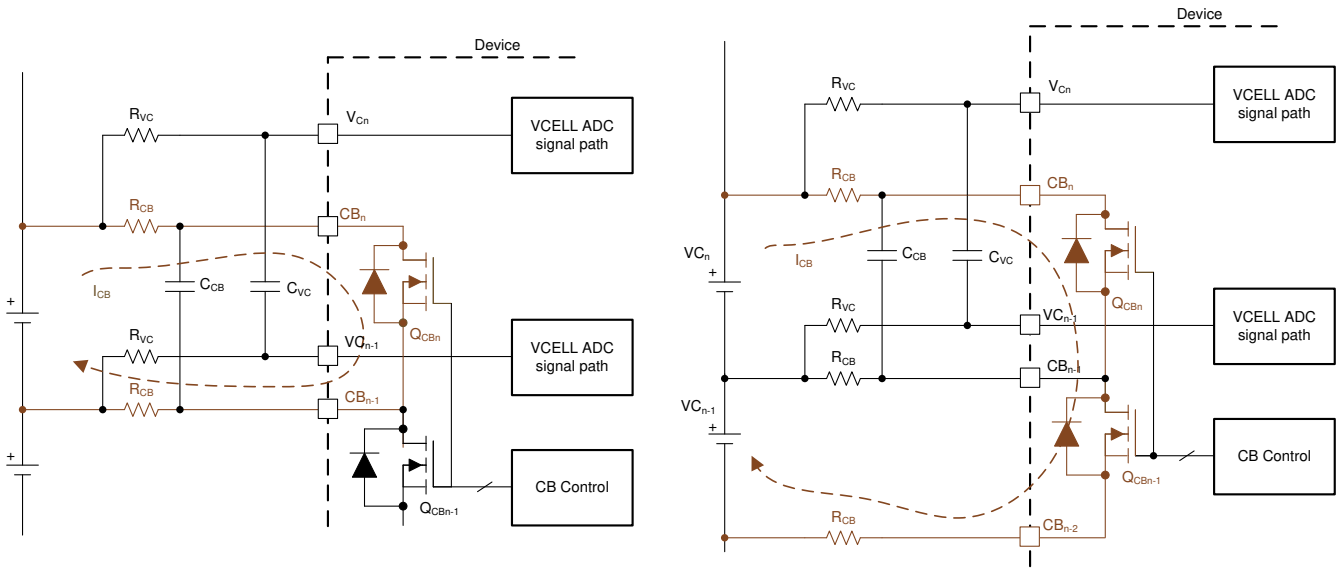

(a) Cell balancing with internal CBFET

(b) Cell balancing with 2 consecutive CBFETs on

Figure 8-14. Internal Cell Balancing and the Flow of Balancing Current

8.3.3.1 Set Up Cell Balancing

There are three steps to set up cell balancing. Each step is described in detail in the following subsections. The host MCU follows the steps to configure the balancing control before starting cell balancing. Balancing starts by setting *BAL_CTRL2[BAL_GO]* = 1. The *BAL_STAT[CB_RUN]* = 1 indicates the cell balancing is actively running. Note that channels not selected by ACTIVE_CELL[NUM_CELL3:0] are bypassed during cell balancing.

1. Determine which channel to enable for cell balancing.
2. Select the cell balancing control methods, auto or manual balancing control.
3. Decide the additional control configuration:
   a. Will the thermal management based on thermistor measurement be enabled?
   b. Is cell balancing stop based on cell voltage?
   c. Will cell balancing terminate if any unmasked fault is detected?

8.3.3.1.1 Step 1: Determine Balancing Channels

The device provides an individual balancing timer for each channel. The balancing timer is the primary control setting to start and stop the cell balancing on a channel. The balancing timer is configured by *CB_CELL*_CTRL* registers, where * = 1 to 6 corresponding to CBFET 1 (CB channel 1) to CBFET 6 (CB channel 6). A non-zero value in these registers sets up the corresponding channels for balancing, but the CBFETs will not turn on until MCU issues the *BAL_CTRL2[BAL_GO]* = 1. When a channel balancing timer expires, cell balancing on that channel stops. Cell balancing can also stop with other conditions, like cell voltage below a certain threshold, unmasked fault is detected, or a forced stop by the host. Section 8.3.3.3 summarizes the cell balancing stop conditions.

8.3.3.1.2 Step 2: Select Balancing Control Methods

The cell balancing runs autonomously once it is configured. The cell balancing control can be configured in two ways using the *BAL_CTRL2[AUTO_BAL]* bit.

- Auto balancing control (*[AUTO_BAL]* = 1): With this method, host MCU can enable balancing on any channel. Once the host sends a *[BAL_GO]* = 1, balancing starts and the device will automatically duty cycle all enabled CBFETs in an odd and even manner. The duty cycle is configured by *BAL_CTRL1[DUTY2:0]* bits.
  – Example 1: MCU sets up all 6 channels for cell balancing.

Copyright © 2023 Texas Instruments Incorporated

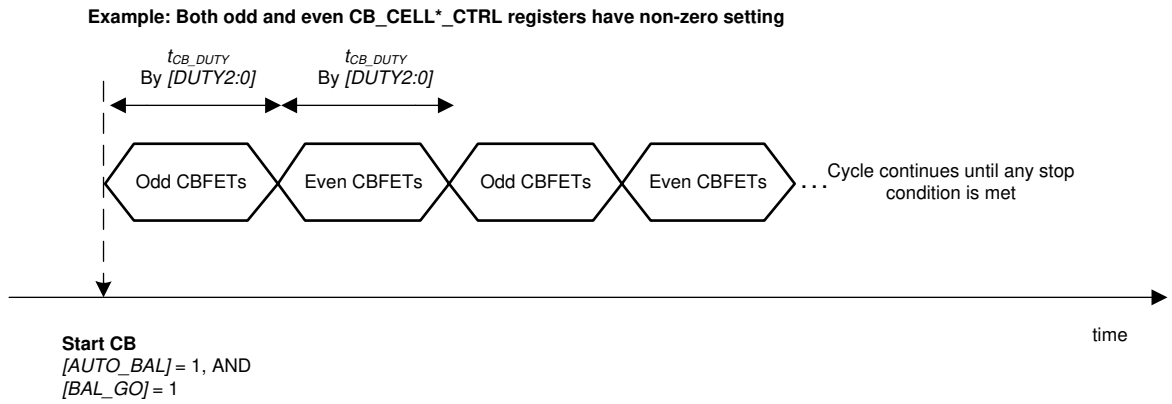

Figure 8-15. Auto Balancing Control, Example 1

– Example 2: MCU sets up odd or even channels only for cell balancing. The *BAL_CTRL1[DUTY2:0]* bits setting is ineffective because the device is not switched between odd or even channels.

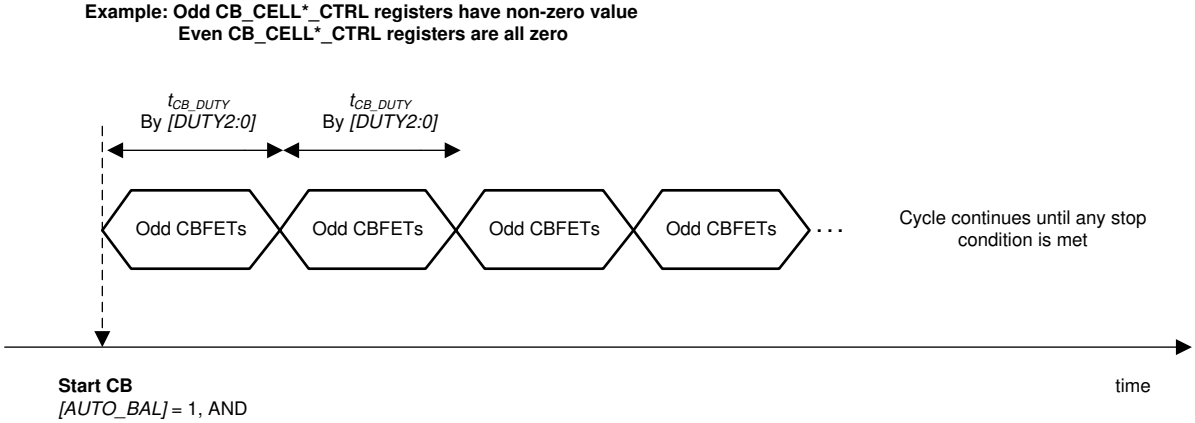

Figure 8-16. Auto Balancing Control, Example 2

- Manual balancing control (*[AUTO_BAL]* = 0): With this method, the device will turn on the CBFETs that have non-zero balancing timer settings once *[BAL_GO]* = 1 is received. There is no odd and even channel switching during the cell balancing and the *BAL_CTRL1[DUTY2:0]* setting does not apply under this control. Host MCU can enable two consecutive CBFETs with this method. When two consecutive CBFETs are enabled with both channels connected to battery cells, the balancing current is significantly different compared to no adjacent CBFET being on (Figure 8-14). The *DEV_CONF[NO_ADJ_CB]* bit is provided to avoid inadvertent enabling of an adjacent CBFET for a system that is not intended to have an adjacent channel on for balancing. In this control method, the device is relying on the MCU to enable the proper channels. If the MCU sends *[BAL_GO]* = 1 but the CBFETs are enabled with an invalid condition, the device will not start balancing and will set *BAL_STAT[INVALID_CBCONF]* = 1. Invalid configurations are either:
  – *DEV_CONF[NO_ADJ_CB]* = 1, but adjacent channels are enabled for balancing,
  – *DEV_CONF[NO_ADJ_CB]* = 0, but more than two consecutive channels are enabled for balancing:
    - Example: Enabling CBFET 1, 2, 4, 5 is valid.
    - Example: Enabling CBFET 1, 2, and 3 is invalid.

Copyright © 2023 Texas Instruments Incorporated

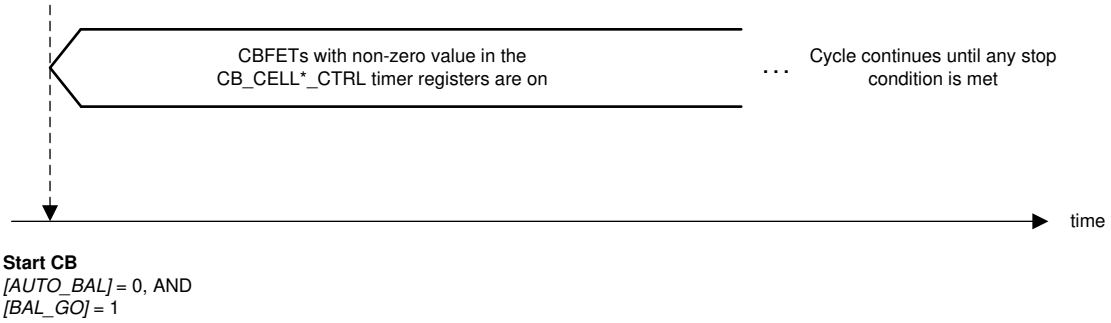

Figure 8-17. Manual Balancing Control

8.3.3.1.3 Step 3a: Balancing Thermal Management

With passive balancing, heat is generated through the internal CBFETs and the external balancing resistors. This creates 2 hotspots on the PCB, the device and the balancing resistors area. The device is designed to support up to 240mA at 75°C ambient. Higher balancing current can be supported with lower ambient temperature.

Nevertheless, the device provides two thermal management functions to avoid overheating the die as well as managing the PCB temperature. Both functions monitor temperature, either die temperature or thermistor temperature, to automatically pause balancing if temperature exceeds a pause threshold. When temperature falls below a recovery threshold, balancing will automatically resume. In the cell balancing pause state, all balancing timers and balancing settings are “freezed”, balancing will resume with the same configuration when the device is out of the pause state.

- CB TWARN Balancing Pause: There are die temperature sensors built near the internal CBFETs. When *[BAL_GO]* = 1 is sent, these temperature sensors are enabled. If any of the sensors detect a die temperature > than the T_{CB_TWARN} threshold (105°C nominal), balancing on all channels is paused. The device sets the *BAL_STAT[CB_INPAUSE]* = 1 and *BAL_STAT[OT_PAUSE_DET]* = 1. When all sensors detect die temperature < (T_{CB_TWARN} – T_{CB_HYS}), cell balancing will resume on the balancing enabled channels.
- Thermistor OTCB Balancing Pause: To manage thermal increases due to external balancing resistors, the device has an option to pause cell balancing on all channels if any of the active thermistors connected to GPIOs detects a temperature greater than a threshold set by *OTCB_THRESH[OTCB_THR3:0]*. Once a OTCB detection is triggered, the *BAL_STAT[CB_INPAUSE]* = 1 and *BAL_STAT[OT_PAUSE_DET]* = 1. The balancing on all enabled channels will resume once all active thermistors detect a temperature less than a recovery threshold set by (*OTCB_THRESH[OTCB_THR3:0]* + *OTCB_THRESH[COOLOFF2:0]*). The OTCB detection is performed through the integrated OT protector. The protector must be turned on and running in round robin mode before cell balancing starts. See Section 8.3.4 for the protector control details. To use the OTCB function, MCU follows the setup sequence state below:
  - Before enabling OT protector:
    - GPIO used for this function will be configured to ADC and OTUT inputs.
    - *[OTCB_THR3:0]* and *[COOLOFF2:0]* are configured.
  - Enable the OT protector in round robin mode.
  - Set *[OTCB_EN]* and *[BAL_GO]* to 1.

  Failure to do so may result in no OTCB pausing action or pausing at the wrong temperature. If a different OTCB or COOLOFF threshold is needed, MCU configures the new threshold values and then re-starts the OT protector to latch in the new setting. It is not required to resend the *[BAL_GO]* = 1.

Copyright © 2023 Texas Instruments Incorporated

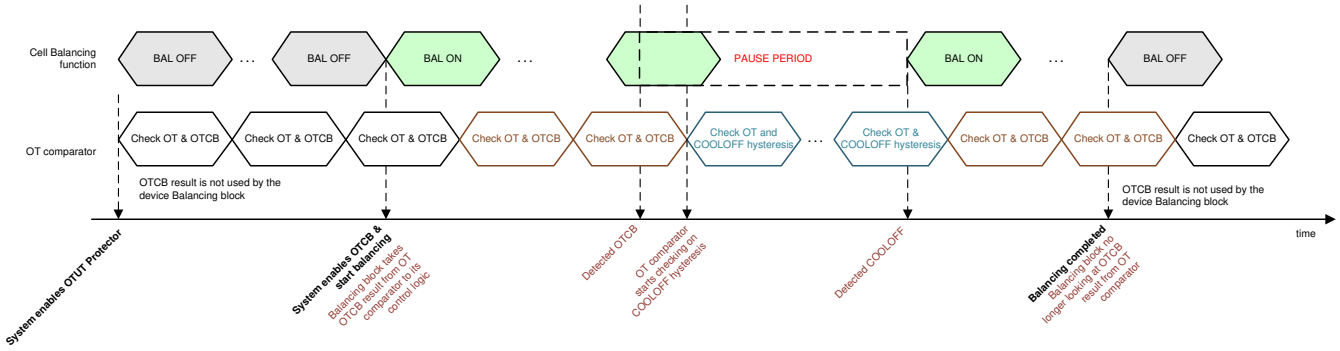

Figure 8-18. Cell Balancing Pause and Resume by OTCB Detection

8.3.3.1.4 Step 3b: Option to Stop On Cell Voltage Threshold

Besides the balancing timers, cell balancing can stop if the channel voltage is less than a threshold set by the *VCB_DONE_THRESH* register with a non-zero value. This stop voltage threshold applies to all channels. When this stop option is used, a channel will stop its balancing either if its balancing timer expires or its voltage level is less than *VCB_DONE_THRESH* setting.

The detection of the *VCB_DONE_THRESH* setting is performed by the integrated UV protector. The protector must be turned on and running in round robin mode before cell balancing starts. See Section 8.3.4 for the protector control details.

When using the VCB_DONE detection function, the MCU follows the setup sequence state below:

- Configure the *VCB_DONE_THRESH* register
- Enable the UV protector in round robin mode
- Send *[BAL_GO]* to 1

Failure to do so may result in no VCB_DONE detection or cell balancing stops at a wrong channel voltage. If different *VCB_DONE* thresholds are needed, MCU configures the new threshold values and then re-starts the UV protector to latch in the new setting. It is not required to resend the *[BAL_GO]* = 1.

8.3.3.1.5 Step 3c: Option to Stop at Fault

The device provides an option to abort cell balancing if an unmasked fault is detected. To enable this option, MCU sets *BAL_CTRL2[FLTSTOP_EN]* = 1 before starting cell balancing. If cell balancing is aborted under this condition, the *BAL_STAT[ABORTFLT]* = 1.

8.3.3.2 Cell Balancing in SLEEP Mode

Cell balancing can be operated in both ACTIVE and SLEEP modes. To run cell balancing in SLEEP mode, simply configure and start cell balancing in ACTIVE mode first. Once cell balancing is running, put the device in SLEEP mode. Cell balancing will continue autonomously in SLEEP mode. See Section 8.4 for description of putting device in SLEEP mode.

When cell balancing is completed with *BAL_STAT[CB_DONE]* = 1, there is an option to put the device in a different power mode by using the *BAL_CTRL2[BAL_ACT1:0]*. For example, setting *[BAL_ACT1:0]* to 0b10 (SHUTDOWN mode) and start cell balancing, When cell balancing is completed in all balancing enabled channels, the device will automatically enter SHUTDOWN mode without MCU interaction. See Section 8.3.3.3 for details about the *BAL_STAT[CB_DONE]* bit set conditions.

8.3.3.3 Pause and Stop Cell Balancing

8.3.3.3.1 Cell Balancing Pause

Cell balancing can be paused by one of three methods:

- If die temperature during balancing > T_{CB_TWARN}.
- If *[OTCB_EN]* = 1 when any thermistor detects a temperature greater than OTCB_THR.
- MCU sets *BAL_CTRL2[CB_PAUSE]* = 1.

The first two conditions are described in Section 8.3.3.1.3. The third pause condition is a MCU-controlled pause action usually used during a diagnostic check that involves the CB path. MCU can pause cell balancing through the *[CB_PAUSE]* bit at any given time once balancing starts.

When the cell balancing is paused due to any of the pause methods, the pause activity is the same:

- Turn off CBFETs on all channels.
- All balancing timers are in hold or “freeze” state.
- *BAL_STAT[CB_INPAUSE]* = 1.
- Any unmasked fault detected during the pause state does not terminate cell balancing. This is because the pause event can be used during diagnostic and fault insertion can be part of the diagnostic.

Once the device exits the cell balancing pause state, the cell balancing resumes. Cell balancing timers will continue the count down. CB channels with non-zero values in their timers will continue with the balancing.

8.3.3.3.2 Cell Balancing Stop

Cell balancing stops in one of three conditions summarized in Table 8-5.

Table 8-5. Cell Balancing Stop Conditions

Stop Condition	Apply to Individual Channel?	Set *BAL_STAT[CB_DONE]* = 1?
Cell balancing timer expires	Yes, this stop condition is monitored per channel	Yes, when all channels meet either stop condition 1 or stop condition 2.
CB channel voltage < *VCB_DONE_THRESH* register value	Yes, this stop condition is monitored per channel	
[FLTSTOP_EN] = 1 and unmasked fault is detected	No, this stops cell balancing on all channels	No, instead set *BAL_STAT[ABORTFLT]* = 1

Additionally, MCU can also force stop cell balancing on any particular channel or on all channels by either:

- Zeroing out the balancing timer setting and issuing *[BAL_GO]* = 1.
- Setting a voltage greater than the CB channel voltage in the *VCB_DONE_THRESH* register and issuing *[BAL_GO]* = 1.

Because the cell balancing timer is the primary control to start cell balancing, if the MCU resets all balancing timers to 0 with *[BAL_GO]* = 1, the device does not start balancing and *BAL_STAT[CB_DONE]* remains 0.

On the other hand, if any of the cell balancing timers is non-zero but the *VCB_DONE_THRESH* register is set to a threshold greater than all CB channel voltages with *[BAL_GO]* = 1, the device starts cell balancing because of non-zero values on the balancing timers, but immediately stops because of the *VCB_DONE_THRESH* stop condition. The *BAL_STAT[CB_DONE]* is set to 1 for this condition.

8.3.3.3.3 Remaining CB Time

Each channel has a balancing timer, when balancing starts, the timers start counting down from the configured balancing time set by *CB_CELLn_CTRL* registers, where n= 1 to 6. When balancing is pause, these timers are paused.

To read the remaining CB time, MCU set *[BAL_TIME_SEL3:0]* to select a single channel, then issue *[BAL_TIME_GO]* = 1 which latch the remaining CB time of the selected channel to *BAL_TIME* register. Repeat the steps to read other remaining CB time on other channels. This timer information is only valid if CB is running, in pause state or in a valid CB stop condition.

If *BAL_TIME* register reports 0x7F or 0xFF, which is not a valid value. This indicates the balancing configuration is keeping the balancing in a stop state, such as *[BAL_GO]* = 1 with all balancing timer set to 0, or MCU never issue *[BAL_GO]* = 1.

Table 8-6. BAL_TIME Register Status

CB Stop Condition	*BAL_TIME* Register
Cell balancing timer expires	The selected CB channel reports 0-s

Copyright © 2023 Texas Instruments Incorporated

Table 8-6. BAL_TIME Register Status (continued)

CB Stop Condition	*BAL_TIME* Register
CB channel voltage < *VCB_DONE_THRESH* register value	The selected CB channel reports the remaining CB time
[FLTSTOP_EN] = 1 and unmasked fault is detected	

8.3.4 Integrated Hardware Protectors

The device integrates cell OV and UV protectors and thermistor OT and UT protectors with programmable thresholds independent of the ADC functionality or the ADC measurements path. The OVUV and OTUT protectors can operate in ACTIVE or SLEEP mode. The subsections below provide an overview of the protectors. See Section 8.3.6.4 for diagnostic control function and status of this block.

8.3.4.1 OVUV Protectors

A set window comparator provides cell voltage monitoring for all VC channels. This comparator function is entirely separate from the ADC function and as such, even if the ADC function fails, the analog comparators still flag the crossing of the overvoltage (OV) and undervoltage (UV) comparator thresholds. The programmed thresholds are translated through DACs to the comparators.

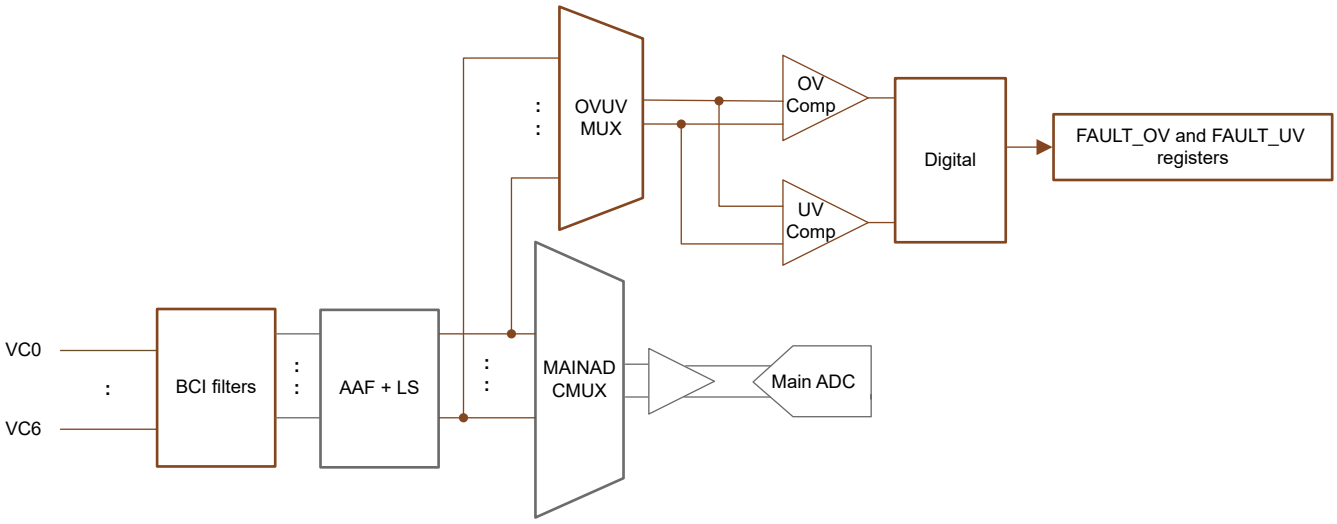

Figure 8-19. OV and UV Protectors

The OV and UV thresholds set by *OV_THRESH* and *UV_THRESH* registers are the same for all VC channels. The active channels are defined by the *ACTIVE_CELL[NUM_CELL3:0]* bits. These bits set the highest active channel number and the device assumes any lower channels are also active.

The *UV_DISABLE1* and *UV_DISABLE2* registers setting disable any individual channel for UV detection, such as channel is connected to bus bar.

Otherwise, the OV protector detects an OV fault on a particular channel if the VC channel voltage is greater than the OV_THRESH setting. The UV protector detects a UV fault on a particular channel if the VC channel voltage is less than the UV_THRESH setting.

8.3.4.1.1 OVUV Operation Modes

The OV and UV protectors have several operation modes controlled by *OVUV_CTRL[OVUV_MODE1:0]* and is summarized in Table 8-7. To start the OVUV protectors, MCU sets *OVUV_CTRL[OVUV_GO]* = 1.

Table 8-7. OVUV Protector Operation Modes

[OVUV_MOD1:0]	Operation Mode	Description
0b00	Stop OV and UV protectors	Stop OV and UV protectors

Copyright © 2023 Texas Instruments Incorporated

Table 8-7. OVUV Protector Operation Modes (continued)

[OVUV_MOD1:0]	Operation Mode	Description
0b01	Round robin run	The OV and UV protectors are looping through all VC inputs. The active channels are checked against the OV and UV thresholds (Figure 8-19). The round robin cycle timing is always the same regardless of the number of the active channels. For the inactive VC channels, the digital logic simply ignores the detection outcome. The UV protector detects both *UV_THRESH* and *VCB_DONE_THRESH*.
0b10	OV and UV BIST run (diagnostic use, see Section 8.3.6.4 for details)	A BIST (built-in self-test) cycle on the OV and UV comparators and the detection paths. VCELL (VC channels) ADC measurement from the Main ADC and the OV and UV detections through the OVUV protectors are not available during this run. MCU shall stop ADC measurement when performing OVUV BIST.
0b11	Single channel run (diagnostic use, see Section 8.3.6.4 for details)	Use for checking the OV and UV DACs. The OV and UV comparator is locked to a single VC input channel in this mode. Channel is locked by *OVUV_CTRL[OVUV_LOCK3:0]*.

If OVUV BIST run is in progress, but MCU start ADC, the ADC result registers will be held at 0x8000. ADC measurements will resume once OVUV BIST is completed and after t_{AFE_SETTLE} time pass.

If ADC is running, but MCU start OVUV BIST, the ADC result registers will be held at its last measurement. ADC measurement update resumes once OVUV BIST is completed and after t_{AFE_SETTLE} time pass

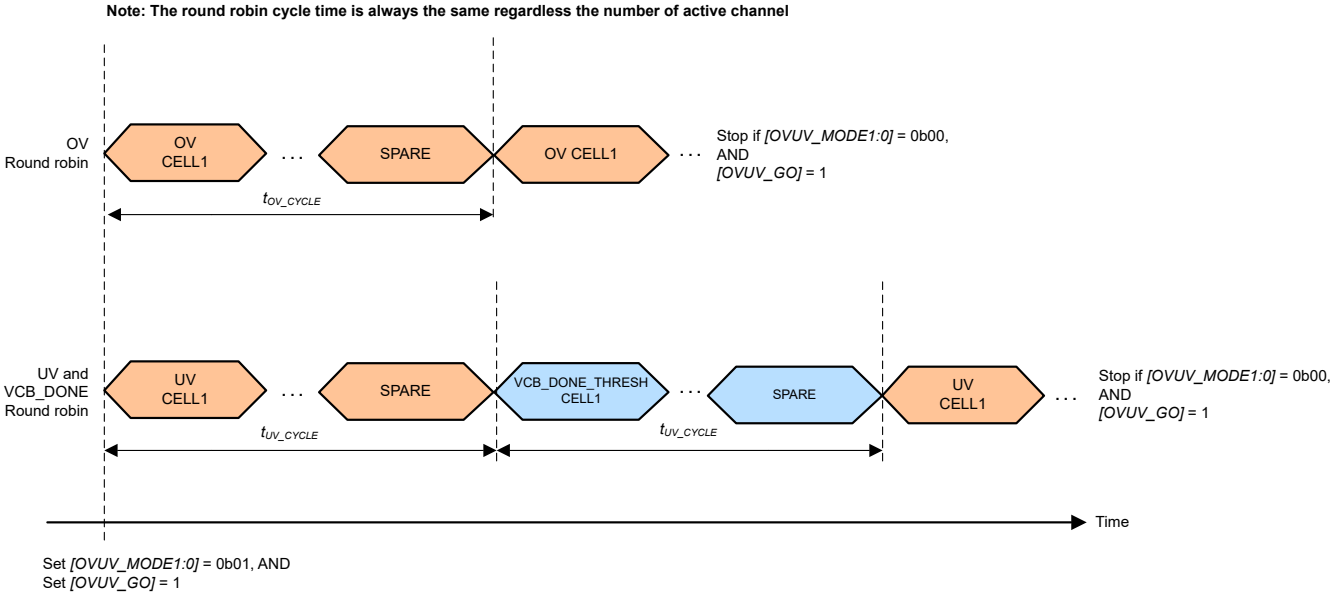

Figure 8-20. OV and UV Round Robin Mode

8.3.4.1.2 OVUV Control and Status

8.3.4.1.2.1 OVUV Control

To start the OV and UV protectors, MCU sets *OVUV_CTRL[OVUV_GO]* = 1. When the device receives the GO command, it samples the following register settings and then starts the OVUV protectors accordingly. Any change of the settings below requires the MCU to resend another GO command to implement the new settings.

- *OV_THRESH* register: Sets the OV threshold for all VC channels
- *UV_THRESH* register: Sets the UV threshold for all VC channels
- *VCB_DONE_THRESH* register: Sets the VCB_DONE threshold for cell balancing stop condition (if enabled)
- *OVUV_CTRL[OVUV_MODE1:0]*: OVUV operation mode selection
- *ACTIVE_CELL* register: Determines the inactive VC channel(s) and ignores the detection result accordingly
- *UV_DISABLE1* and *UV_DISABLE2* registers: Determines the inactive VC channel(s) and ignores the detection result accordingly.

Copyright © 2023 Texas Instruments Incorporated

The OVUV protectors can also operate in SLEEP mode. MCU first starts the protector in ACTIVE mode, then puts the device in SLEEP mode. The OVUV protectors will continue the operation until the MCU commands to stop or if the device shuts down.

8.3.4.1.2.2 OVUV Status

The *DEV_STAT[OVUV_RUN]* = 1 indicates the OVUV protectors are running. The OV detection result is reflected in the *FAULT_OV1* and *FAULT_OV2* registers; the UV detection result is reflected in the *FAULT_UV1* and *FAULT_UV2* registers.

The VCB_DONE detection is not a fault but a cell balancing stop condition. The result is reflected in a particular channel stopping cell balancing. See Section 8.3.3 for details.

8.3.4.2 OTUT Protector

A set window comparator provides temperature monitoring for all GPIO inputs with the external thermistor network pulled up to TSREF. This comparator function is entirely separate from the ADC function and, as such, even if the ADC function fails, the analog comparators still flag the crossing of the overtemperature (OT) and undertemperature (UT) comparator thresholds. The programmed thresholds are translated through DACs to the comparators.

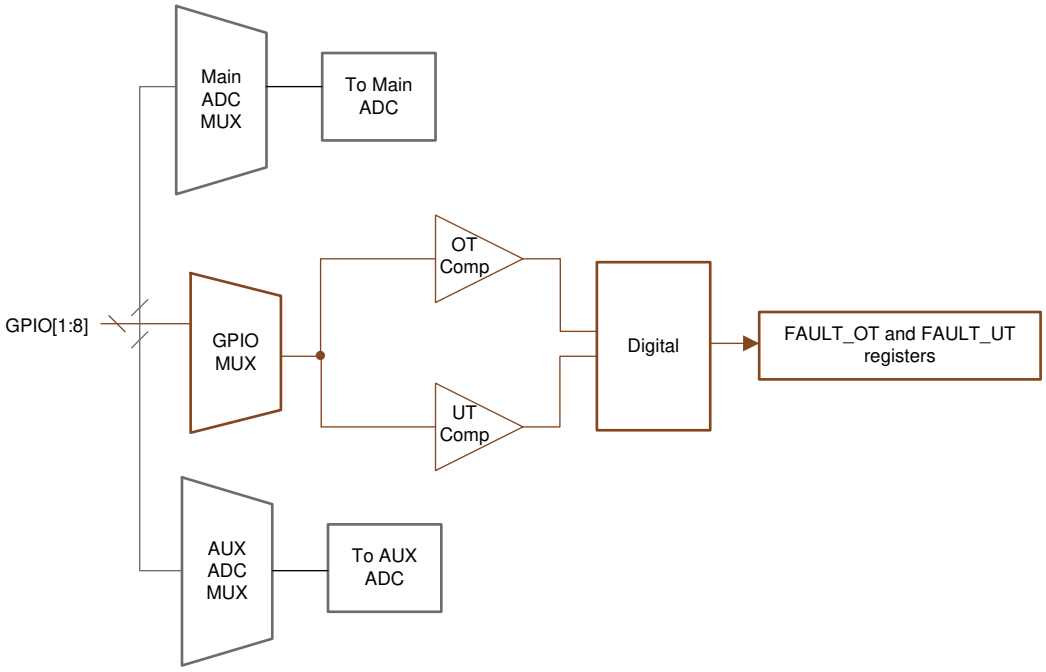

Figure 8-21. OT and UT Protectors

The OT and UT thresholds set by *OTUT_THRESH[OT_THR4:0]* and *OTUT_THRESH[UT_THR2:0]* bits are the same for all active GPIO inputs. The active GPIO inputs are defined by the *GPIO_CONFn[GPIO*2:0]* (where n = 1 to 4, * = 1 to 8 for the corresponding GPIO input). The GPIO has to be configured as ADC and OTUT inputs to be considered as active GPIO inputs for the OTUT protectors.

The OTUT comparators use TSREF as reference, and so the detection is in ratiometric form. The OT protector detects an OT fault on a particular GPIO if the (GPIO voltage/TSREF) is less than the *OTUT_THRESH[OT_THR4:0]* setting. The UT protector detects a UT fault on a particular GPIO if the (GPIO voltage/TSREF) is more than the *OTUT_THRESH[UT_THR2:0]* setting. The OTUT protectors assume the NTC thermistor is used for temperature monitoring.

MCU ensures TSREF is enabled before starting the OTUT protectors. Failing to do so, the OTUT protectors will flag all OT and UT faults on all GPIO inputs as an indication of abnormal detection.

Copyright © 2023 Texas Instruments Incorporated

8.3.4.2.1 OTUT Operation Modes

The OT and UT protectors have several operation modes controlled by *OTUT_CTRL[OTUT_MODE1:0]* and are summarized in Table 8-8. To start the OTUT protectors, the MCU sets *OTUT_CTRL[OTUT_GO]* = 1.

Table 8-8. OTUT Protector Operation Modes

[OTUT_MOD1:0]	Operation Mode	Description
0b00	Stop OT and UT protectors	Stop OT and UT protectors
0b01	Round robin run	The OT and UT protectors are looping through all GPIO inputs. The active GPIO inputs are checked against the OT and UT thresholds (Figure 8-22). The round robin cycle timing is always the same regardless of the number of the active GPIOs. For the inactive GPIO inputs, the digital logic simply ignores the detection outcome. The OT protector detects both OT threshold and OTCB threshold.
0b10	OT and UT BIST run (diagnostic use, see Section 8.3.6.4 for details)	A BIST (built-in self-test) cycle on the OT and UT comparators and the detection paths. Temperature (GPIO channels) ADC measurement from the main or AUX ADC and the OT and UT detections through the OTUT protectors are not available during this run.
0b11	Single channel run (diagnostic use, see Section 8.3.6.4 for details)	Used for checking the OT and UT DACs. The OT and UT comparator is locked to a single GPIO input channel in this mode. Channel is locked by *OTUT_CTRL[OTUT_LOCK2:0]*.

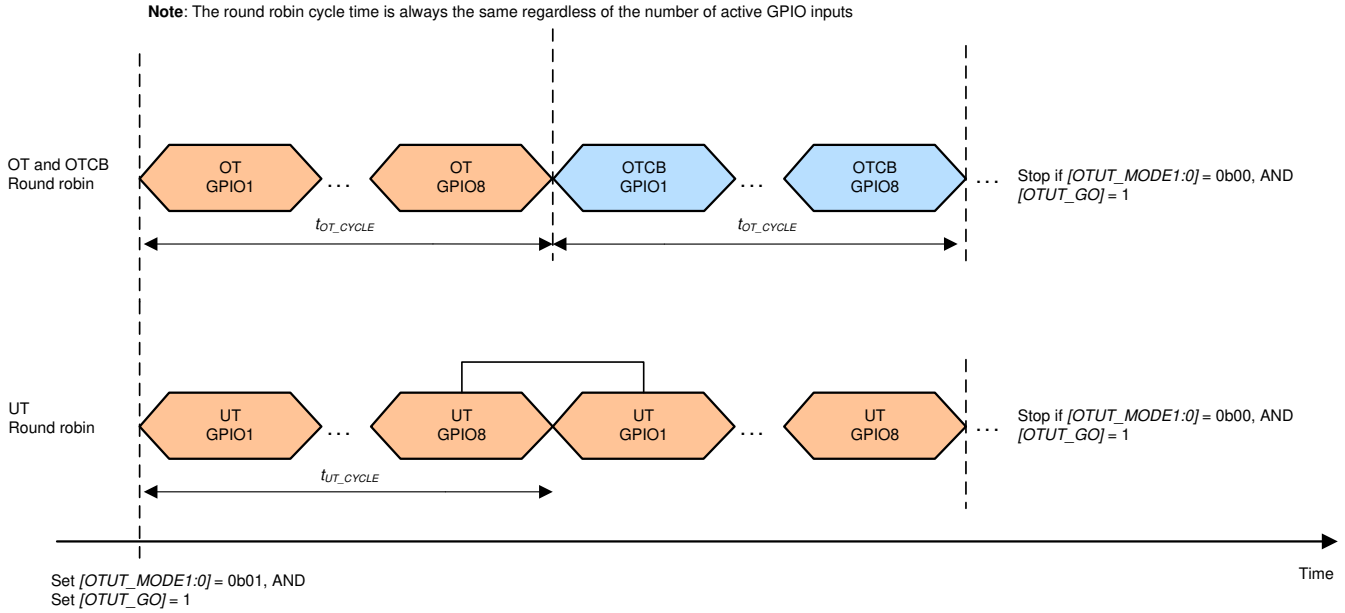

Figure 8-22. OT and UT Round Robin Modes

8.3.4.2.2 OTUT Control and Status

8.3.4.2.2.1 OTUT Control

Ensure TSREF is enabled. To start the OT and UT protectors, host MCU sets *OTUT_CTRL[OTUT_GO]* = 1. When the device receives the GO command, it samples the following register settings and then starts the OTUT protectors accordingly. Any change of the settings below requires the MCU to send another GO command to implement the new settings.

- *OTUT_THRESH[OT_THR4:0]*: Sets the OT threshold for all active GPIO inputs
- *OTUT_THRESH[UT_THR2:0]*: Sets the UT threshold for all active GPIO inputs
- *OTCB_THRESH* register: Sets the OTCB threshold and COOLOFF hysteresis (if enabled)
- *OTUT_CTRL[OTUT_MODE1:0]*: OTUT operation mode selection
- *GPIO_CONF1* to *GPIO_CONF4*: Determines the inactive GPIO channel(s) and ignores the detection result.

Copyright © 2023 Texas Instruments Incorporated

The OTUT protectors can also operate in SLEEP mode. MCU first starts the protector in ACTIVE mode, then puts the device in SLEEP mode. The OTUT protectors will continue the operation until the MCU commands them to stop or if device shuts down.

8.3.4.2.2.2 OTUT Status

The *DEV_STAT[OTUT_RUN]* = 1 indicates the OTUT protectors are running. The OT detection result is reflected in the *FAULT_OT* register; the UT detection result is reflected in the *FAULT_UT* register.

The OTCB detection is not a fault but a cell balancing pause condition. The result is reflected in a particular channel pausing cell balancing. See Section 8.3.3 for details.

8.3.5 GPIO Configuration

The device has eight GPIOs. Each GPIO can be programmed to be one of the configurations below through the *GPIO_CONF1* to *GPIO_CONF4* registers.

GPIO	DISABLE	INPUT			OUTPUT		WEAK PULL-UP/ DOWN		SPECIAL			
	High-Z	Digital	ADC & OTUT	ADC Only	High	Low	ADC & weak pull-up	ADC & weak pull-down	Module Balancing *MB_TIMER_CTRL* is not 0x00	SPI Controller *[SPI_EN]* = 1	Fault Input *[FAULT_IN_EN]* = 1	Current Sense Toggle *[CD_RDY_EN]* = 1
GPIO1	√	√	√	√	√	√	√	√				√ (output, Low when conversion is ready)
GPIO2	√	√	√	√	√	√	√	√				
GPIO3	√	√	√	√	√	√	√	√	√ (output, HIGH)			
GPIO4	√	√	√	√	√	√	√	√		√ (SS)		
GPIO5	√	√	√	√	√	√	√	√		√ (MISO)		
GPIO6	√	√	√	√	√	√	√	√		√ (MOSI)		
GPIO7	√	√	√	√	√	√	√	√		√ (SCLK)		
GPIO8	√	√	√	√	√	√	√	√			√ (Input, Active Low)	

GPIO Configuration		Description
DISABLE	High-Z	This is the default GPIO configuration at reset if OTP is not programmed
INPUT	Digital	When GPIO is configured as Digital Input, the device detects the input voltage level to determine a 1 or 0 with respect to its V_{IL} and V_{IH} levels. The result is shown in the *GPIO_STAT* register.
	ADC and OTUT	The GPIO is configured to be measurable by the ADC (both main and AUX ADCs) and also as the input to the OTUT protectors. Example: use this selection for GPIO used for thermistor connection.
	ADC only	The GPIO is configured to be measurable by the ADC (both main and AUX ADCs) only. Example: use this selection to measurement voltage on GPIO.
OUTPUT	High	The GPIO is configured as digital output high (internally pull up to CVDD). The logic state is also shown in the *GPIO_STAT* register.
	Low	The GPIO is configured as digital output low. The logic state is also shown in the *GPIO_STAT* register.
WEAK PULL-UP/DOWN	ADC and Weak Pull-up	The GPIO is pull up internally and is configured to measured by the ADC (both main and AUX ADCs)
	ADC and Weak Pull-down	The GPIO is pull down internally and is configured to measured by the ADC (both main and AUX ADCs)

Copyright © 2023 Texas Instruments Incorporated

GPIO Configuration		Description
SPECIAL	SPI Controller	When *GPIO_CONF1[SPI_EN]* = 1, GPIO4 to GPIO7 are taken over as the SPI controller communication lines. This configuration has higher priority over any of the INPUT/OUTPUT configurations on GPIO4 to GPIO7.
	Fault Input	When *GPIO_CONF1[FAULT_IN_EN]* = 1, GPIO8 is taken over as an input that if the GPIO was asserted (active low), will set *FAULT_SYS[GPIO]* = 1 and assert NFAULT (if enabled).
	Current Sense Toggle	When GPIO_CONF2[CS_RDY_EN] = 1, GPIO1 is taken over as output. When a conversion is ready from CS ADC, GPIO1 will be LOW. Once CURRENT_HI register is read by host, GPIO1 will return to HIGH.

8.3.6 Communication, OTP, Diagnostic Control

8.3.6.1 Communication

8.3.6.1.1 Serial Interface

The device has a serial interface which uses UART protocol as the physical layer to communicate between device and host. The communication is specified in a proprietary frame structure.

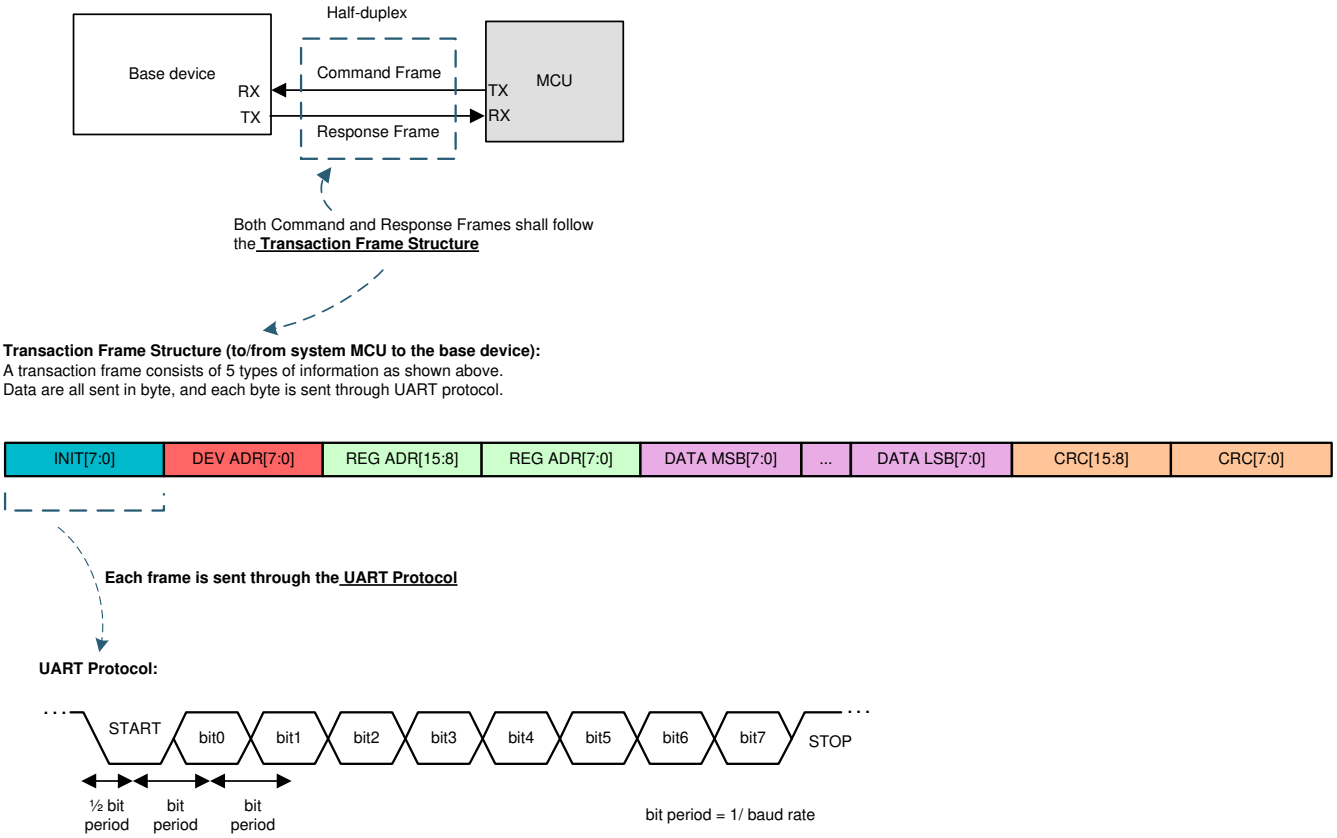

Figure 8-23. UART Communication to Host

8.3.6.1.1.1 UART Physical Layer

The UART interface follows the standard serial protocol of 8-N-1, where it sends information as a START bit, followed by eight data bits, and then one STOP bit. The STOP bit indicates the end of the byte. If a byte is received that does not have the STOP bit set, the *FAULT_COMM1[STOP_DET]* bit is set, indicating there may be a baud rate issue between the host and the device. The device supports 1-Mbps baud rate.

The UART sends data on the TX pin and receives data on the RX pin. When idle, the TX and RX pins are high. The UART interface requires that RX is pulled up to CVDD through a resistor on the device. The RX is pulled up on the device side. Do not leave RX unconnected.

Copyright © 2023 Texas Instruments Incorporated

The TX pin must be pulled high through a resistor on the host side of device to prevent triggering an invalid communications frame when the communication cable is not attached, or during power-off or SHUTDOWN state when TX is high impedance. TX is always pulled to CVDD internally while in ACTIVE or SLEEP mode.

The UART interface is strictly a half-duplex interface. While transmitting, any attempted communication on RX is ignored. The only exception is COMM CLEAR signal on RX pin, which immediately terminates the communication. See Section 8.3.6.1.1.1.3 for details.

Using two STOP bits in UART:

The device can be set up with two stop bits (*DEV_CONF[TWO_STOP_EN]* = 1), the UART response frame transmits from device to host will always return with two STOP bits as shown below. Host is not required to send the command frame to the device with two STOP bits. The device is able to receive one or more stop bits with or without this function enabled.

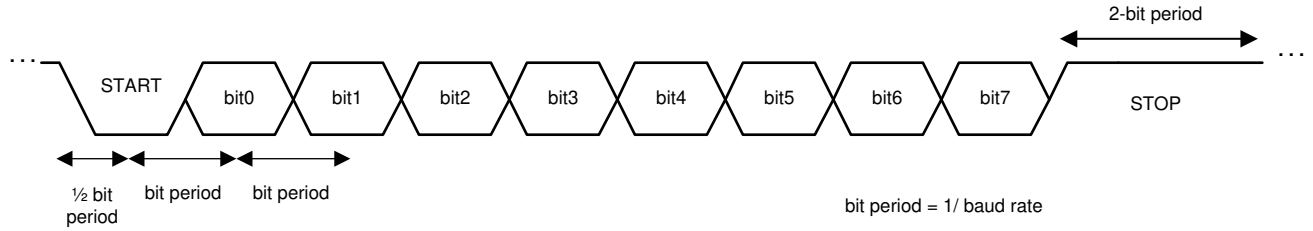

Figure 8-24. UART Response Frame with Two STOP Bits

Potential use of the two stop bits may be to:

- The host to gain extra time to process the data before receiving next data frame.
- The clock tolerance between device and host might cause the data detection out of sync. Having two STOP bits allows re-synchronization of the communication; hence, improving communication robustness.

8.3.6.1.1.1.1 UART Transmitter

The transmitter is configured to wait a specified number of bit periods after the last bit reception before starting transmissions using the *TX_HOLD_OFF* register. This provides time for the host to switch the bus direction at the end of its transmission.

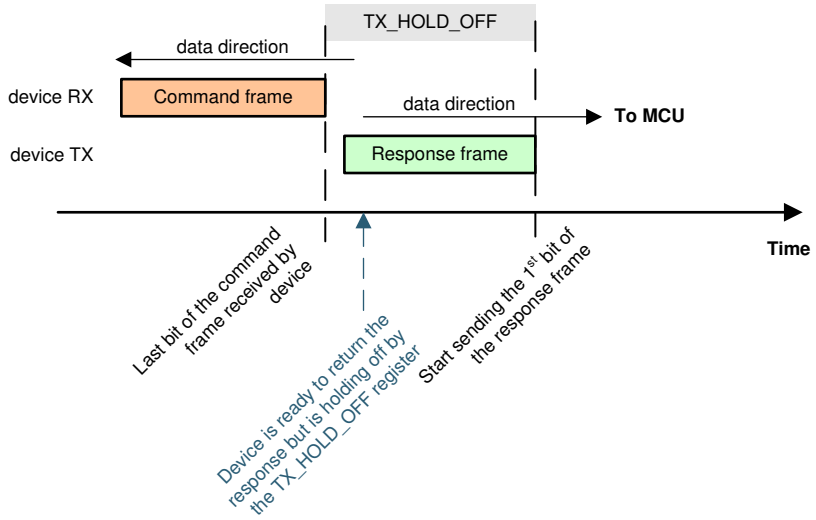

Figure 8-25. UART TX_HOLD_OFF

Copyright © 2023 Texas Instruments Incorporated

8.3.6.1.1.1.2 UART Receiver

While the device is transmitting data on TX, RX is ignored except when receiving a COMM CLEAR. If the host starts a transmitting without waiting to receive the preceding transaction's response, the communication is not considered reliable and the host must send a COMM CLEAR to restore normal communications to the device.

8.3.6.1.1.1.3 COMM CLEAR

A COMM CLEAR is sent on the RX pin of the device. I RX cannot be disabled and a COMM CLEAR can be sent at any time regardless of the TX status. Ensure that the COMM CLEAR does not exceed the maximum value of $t_{UART(CLR)}$ bit periods, as this may result in recognition of other communication pings.

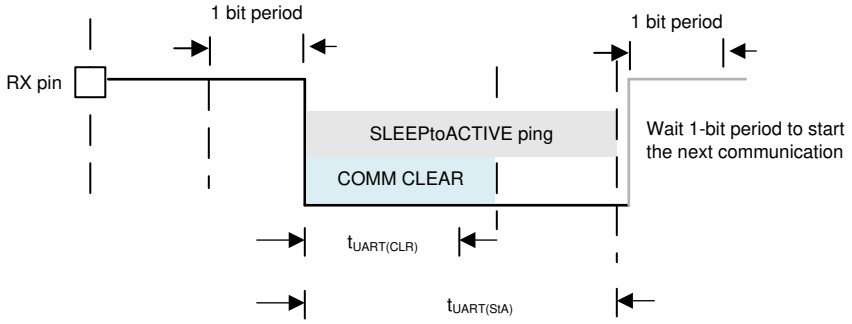

Figure 8-26. UART COMM CLEAR

Use the COMM CLEAR command to clear the receiver and instruct the UART engine to look for a new start of frame. The next byte following the COMM CLEAR is always considered a start-of-frame byte. When detected, a COMM CLEAR sets the *FAULT_COMM1[COMMCLR_DET]* flag. The host must wait at least $t_{UART(RXMIN)}$ after the COMM CLEAR to start sending a new frame. It should be noted that in addition to the *[COMMCLR_DET]* flag, the *FAULT_COMM1[STOP_DET]* flag is also set because the COMM CLEAR timing violates the typical byte timing and the STOP bit is seen as 0.

A SLEEPtoACTIVE ping also clears the UART receiver. This ping sets the *[COMMCLR_DET]* flag when transiting from SLEEP to ACTIVE mode. If this ping is sent during ACTIVE mode, the *[COMMCLR_DET]* and *[STOP_DET]* flags are set.

8.3.6.1.1.2 Command and Response Protocol

The host initiates every transaction between the host and device. The device never transmits data without first receiving a command frame from the host. A command frame is a communication frame sent from host to the device; a response frame is a response (to a read command) from device to host. After a command frame is transmitted, the host must wait for all expected responses to be returned (or a timeout in case of error) before initiating a new command frame. The commands supported by the device are listed in Table 8-9:

Table 8-9. Commands

Command	Description
Single Device Read	To read a register(s) from a single device
Single Device Write	To write a register(s) to a single device

8.3.6.1.1.2.1 Transaction Frame Structure

The protocol layer is made up of transaction frames. There are two basic types of transaction frames: command frames (transactions from host) and response frames (transactions from device). The transaction frames are made up of the following five field types:

- Frame initialization (INIT, 1-byte)
- Device address (DEV ADR, 1-byte)
- Register address (REG ADR, 2-byte)
- Data (DATA, various byte length)

Copyright © 2023 Texas Instruments Incorporated

- Cyclic redundancy check (CRC, 2-byte)

8.3.6.1.1.2.1.1 Frame Initialization Byte

The frame initialization byte is used in both command and response frames. It is always the first byte of the frame. The frame initialization byte performs two functions. First, it defines the frame as either a command frame (host) or a response frame (device). Second, it defines the length of the frame that follows after the frame initialization byte. This provides the receiver an exact number of bytes to expect for a complete command or response.

Table 8-10. Command Frame Initialization Byte Definition

		Command Frame		Response Frame	
	Bit	**Bit Name**	**Description**	**Bit Name**	**Description**
INIT	7	FRAME_TYPE	1 = Define Command Frame	FRAME_TYPE	0 = Defines Response Frame
	6	REQ_TYPE	000 = Single Device Read 001 = Single Device Write 010 = RSVD 011 = RSVD 100 = RSVD 101 = RSVD 110 = RSVD 111 = RSVD	RESPONSE_BYTE	Number of the data bytes 0x00 = 1 byte 0x01 = 2 bytes : 0x7F = 128 bytes
	5				
	4				
	3	RSVD	Reserved. This bit is ignored		
	2	DATA_SIZE	Number of data bytes of the command frame, excluding device address, register address or CRC 000 = 1 byte 001 = 2 bytes : 111 = 8 bytes		
	1				
	0				

8.3.6.1.1.2.1.2 Device Address Byte

The device address byte identifies the device targeted by the single device read/write command. All response frames contain the device address byte. In single device read/write commands, the device that contains a matching value in the *DIR0_ADDR* (used for communication direction with *CONTROL1[DIR_SEL]* = 0) or in *DIR1_ADDR* (used for communication direction with *CONTROL1[DIR_SEL]* = 1) responds to the command.

Table 8-11. Device Address Byte Definition

		Command Frame		Response Frame	
	Bit	**Bit Name**	**Description**	**Bit Name**	**Description**
DEV ADR	7	RSVD	Should always write 0	RSVD	Should always write 0
	6	RSVD	Should always write 0	RSVD	Should always write 0
	5 to 0	Device Address	Set the device address range from 0x00 to 0x3F	Device Address	Set the device address range from 0x00 to 0x3F

8.3.6.1.1.2.1.3 Register Address Bytes

Register addresses are two bytes in length. Any write command to an invalid register address is ignored. Any read from an invalid register returns a 0x00 response. This is true for command frames sent to an individual register with invalid address, or as part of command sent to multiple registers with invalid addresses. When read/write addresses a block of registers with only some invalid addresses, the valid addresses respond as normal, while the invalid addresses respond as previously described.

Copyright © 2023 Texas Instruments Incorporated

Table 8-12. Register Address Byte Definition

		Command Frame		Response Frame	
	Bit	Bit Name	Description	Bit Name	Description
REG_ADR	7 to 0	Register Address (MSB)	Target or beginning of the register address	Register Address (MSB)	Target or beginning of the register address
	7 to 0	Register Address (LSB)	Target or beginning of the register address	Register Address (LSB)	Target or beginning of the register address

8.3.6.1.1.2.1.4 Data Bytes

The number of data bytes and the relevant information they convey is determined by the type of command frame sent and the target register specified in that command frame. When part of a command frame, the data bytes contain the values to be written to the registers. When part of a response frame, the data bytes contain the values returned from the registers.

Table 8-13. Data Bytes Definition

		Command Frame		Response Frame	
	Bit	Bit Name	Description	Bit Name	Description
DATA	7	Data Byte[0]	For Write command: Data value to be written to the register(s) is specified in the REG_ADR frame For Read command: Specify the number of bytes need to be returned by the read command. 0x00 = 1 byte 0x01 = 2 bytes : 0x7F = 128 bytes	Data Byte[0]	Data value return from the register(s) is specified in the REG_ADR frame
	6				
	5				
	4				
	3				
	2				
	1				
	0				
	…	……	……	……	……
	7	Data Byte [n]	For Write command: Data value to be written to the register(s) is specified in the REG_ADR frame	Data Byte [n]	Data value return from the register(s) is specified in the REG_ADR frame
	6				
	5				
	4				
	3				
	2				
	1				
	0				

8.3.6.1.1.2.1.5 CRC Bytes

The device uses a CRC (cyclic redundancy check) to protect data integrity during transmission. The CRC represents the remainder of a process analogous to polynomial long division, where the frame being checked is divided by the generator. The CRC appended to the frame is the remainder. Because of this process, when the device receives a frame, the CRC calculated by the receiver across the entire frame including the transmitted CRC will be zero, indicating a correct transmission and reception. A non-zero result indicates a communication error. Specifically, the device uses the CRC-16-IBM polynomial ($x^{16} + x^{15} + x^2 + 1$) with 0xFFFF initialization.

The CRC value is checked as the first step after receiving the communication frame. If the CRC is incorrect, the entire frame is discarded and not processed. Any additional frame errors are not checked and any errors are not indicated other than CRC error.

8.3.6.1.1.2.1.6 Calculating Frame CRC Value

The CRC calculation by the transmitter is in bit-stream order across the entire transmission frame (except for the CRC). When determining bit-stream order for implementing the CRC algorithm, it is important to note that protocol bytes transmit serially, least-significant bit first. Figure 8-27 illustrates the bit-stream order concept.

Copyright © 2023 Texas Instruments Incorporated

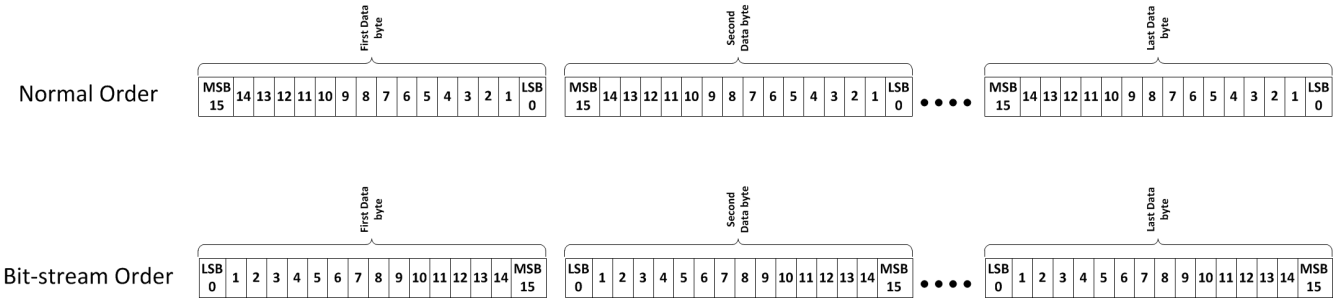

Figure 8-27. Bit-Stream Order Explanation

The CRC (0x0000) is appended to the end of the bit-stream. This bit-stream is then initialized by XOR'ing with 0xFFFF to catch any leading 0 errors. This new bit-stream is then divided by the polynomial (0xC002) until only the 2-byte CRC remains. During this process, the most significant 17 bits of the bit stream are XOR'd with the polynomial. The leading zeroes of the result are removed and that result is XOR'd with the polynomial once again. The process is repeated until only the 2-byte CRC remains. For example:

Example 1: CRC Calculation Using Polynomial Division

```
Command Frame = 0x80 00 02 0F 0B (0b1000 0000 0000 0000 0000 0010 0000 1111 0000 1011)
Command Frame in bit stream order = 0x01 00 40 F0 D0 (0b0000 0001 0000 0000 0100 0000 1111 0000
1101 0000)
After Initialization (XOR with 0xFFFF) = 0b1111 1110 1111 1111 0100 0000 1111 0000 1101 0000
1111 1110 1111 1111 0100 0000 1111 0000 1101 0000 0000 0000 0000 0000 #append 0x0000 for CRC
1100 0000 0000 0010 1 #XOR with polynomial
0011 1110 1111 1101 1100 0000 1111 0000 1101 0000 0000 0000 0000 0000
11 1110 1111 1101 1100 0000 1111 0000 1101 0000 0000 0000 0000 0000 #delete leading zeros from
previous result
11 0000 0000 0000 101 #XOR with polynomial
00 1110 1111 1101 0110 0000 1111 0000 1101 0000
……
……
……
1100 0110 0000 0001 0000 0000
1100 0000 0000 0010 1 #XOR with polynomial
0000 0110 0000 0011 1000 0000
110 0000 0011 1000 0000
110 0000 0000 0001 01 #XOR with polynomial
000 0000 0011 1001 0100
0000 0011 1001 0100 #CRC result in bit stream order
1100 0000 0010 1001 #final CRC result in normal order
CRC final 0xC029
```

8.3.6.1.1.2.1.7 Verifying Frame CRC

There are several methods for checking the CRC of a frame. One method is to simply calculate the CRC for the transmitted command except the last two bytes (CRC bytes) using the method described in the previous section, and then compare that result with the transmitted CRC bytes. A more simple option is to run the entire transmission through the CRC algorithm. If the CRC is correct, the result is 0000. In this case, the initial zero padding of the bit-stream with 16 zeroes is not necessary. Using the previous result and running through the algorithm produces the following results:

Example 1: CRC Verification Using Polynomial Division:

```
Command Frame = 0x80 00 02 0F 0B (0b1000 0000 0000 0000 0000 0010 0000 1111 0000 1011)
CRC to Check = 0xC029
Command Frame w/ CRC in bit stream order = 0x80 00 02 0F 0B C0 29 (0b1000 0000 0000 0000 0000 0010
0000 1111 0000 1011 0000 0011 1001 0100)
After Initialization (XOR with 0xFFFF) = 0b0 1111 1110 1111 1111 0100 0000 1111 0000 1101 0000 0000
0011 1001 0100
1111 1110 1111 1111 0100 0000 1111 0000 1101 0000 0000 0011 1001 010 #delete leading zeros from
previous result
1100 0000 0000 0010 1 #XOR with polynomial
0011 1110 1111 1101 1100 0000 1111 0000 1101 0000 0000 0011 1001 0100
11 1110 1111 1101 1100 0000 1111 0000 1101 0000 0000 0011 1001 0100 #delete leading zeros from
```

```
previous result
11 0000 0000 0000 101 #XOR with polynomial
00 1110 1111 1101 0110 0000 1111 0000 1101 0000 0000 0011 1001 0100
……
……
……
1100 0110 0000 0010 1001 0100
1100 0000 0000 0010 1 #XOR with polynomial
0000 0110 0000 0000 0001 0100
1 1000 0000 0000 0101 00
1 1000 0000 0000 0101 #XOR with polynomial
0 0000 0000 0000 0000 00
0x0000 #verfiy that CRC checks out valid
```

Note

The result of ‘0b0000 0000 0000 0000’ for the CRC indicates a successful check.

8.3.6.1.1.2.2 Transaction Frame Examples

Transaction frames are created using the frame structure discussed in the previous sections. The CRC values in the examples are correct and can be used to verify the customer CRC algorithm. The CRC is verified by the device with every received command frame and the command is not executed unless the CRC is valid.

8.3.6.1.1.2.2.1 Single Device Read/Write

Single Device Read:

Device address must be set up before using this command. A single device read generates a response frame whose length depends on the requested number of register bytes read. The command frame send by host must contain the register address to start at (address field) and the number of bytes to return (number of registers to read). The DATA_SIZE field in the initialization byte for the single device read command is always 0b000.

Single Device Write:

Device address must be set up before using this command. A write command for a single device enables the customer to update up to eight consecutive registers with one command. The single device write command frame must contain the register address to start at (address field) and the data bytes to write to the registers. The DATA_SIZE field in the initialization byte for the single device write command is the number of registers to update.

Copyright © 2023 Texas Instruments Incorporated

Table 8-14. Single Device Read/Write

	Single Read Command Sent by Host		Single Write Command Sent by Host	
Example	**Read 6 Cell Voltages from B0**		**Write OTP Unlock Code to OTP_PROG_UNLOCK1A to 1D Registers**	
Frame Field	**Data**	**Comments**	**Data**	**Comments**
Initialization Byte	0x80	Always 0x80 FRAME_TYPE = 1 REQ_TYPE = 0b000 = Single Read DATA_SIZE = 0b000	0x93	0x90 for 1 byte data write, 0x91 for 2 bytes data write, 0x92 for 3 bytes data write and so on. For this example: FRAME_TYPE = 1 REQ_TYPE = 0b001= Single Write DATA_SIZE = 0b11 = 4 bytes
Device Address	0x00	Device address 0x00 (B0) in this example	0x00	Device address 0x00 (B0) in this example
Register Address	0x057C	Start address of the register block to read (address of VCELL6_HI in this example)	0x0300	Start address of the register block to write (address of OTP_PROG_UNLOCK1A in this example)
Data	0x0B	Instruct the target device to return 12 bytes of data (that is, from address 0x057C to 0x0587), assuming each VCELLn_HI = 0x80, VCELLn_LO = 0x00, where n = 1 to 6.	0x02B7 78BC	The unlock value to OTP_PROG_UNLOCK1A to OTP_PROG_UNLOCK1D
CRC	0x54D8		0x9B6E	

8.3.6.1.2 Communication Timeout

There are two programmable communication timeout thresholds, CTS timer and CTL timer, that monitor the absence of a valid frame. A valid frame is defined as any frame (response or command) that does NOT contain any errors that prevent the frame from being processed. The communication timeouts are only actively counting while in ACTIVE mode. The counters are disabled and reset during SHUTDOWN mode. In SLEEP mode, the last counter values are held frozen.

8.3.6.1.2.1 Short Communication Timeout

The short communication timeout acts like an alert to the host when triggered. The timeout period is programmable through the *COMM_TIMEOUT_CONF[CTS_TIME2:0]* bits. If enabled, the timer is reset every time a valid response or command frame is received. If the timer expires, the *FAULT_SYS[CTS]* bit is set.

8.3.6.1.2.2 Long Communication Timeout

The long communication timeout allows the host to put the device in SLEEP or SHUTDOWN mode for power saving. The timeout period is programmable through *COMM_TIMEOUT_CONF[CTL_TIME2:0]* bits. If enabled, the timer is reset every time a valid response or command frame is received. If the timer expires, host can choose one of the following actions through *COMM_TIMEOUT_CONF[CTL_ACT]* bit.

- Set *FAULT_SYS[CTL]* = 1 and enter SLEEP mode.
- Enter SHUTDOWN mode.

8.3.6.1.3 SPI Controller

The GPIO4 thru GPIO7 are configurable as a SPI controller interface when *GPIO_CONF1[SPI_EN]* = 1. The SPI controller includes four I/Os:

- SCLK: SPI clock, generated by the device and is used for synchronization
- MOSI: Controller data output, driven by the device to output data to peripheral
- MISO: Controller data input, detecting data from peripheral
- SS: Peripheral select, driven by the device during SPI communication.

The *SPI_CONF[CPOL]* (clock polarity) and *[CPHA]* (clock phase) define the SPI clock format. The *[CPOL]* is defined if the SPI clock is inverted or non-inverted. The *[CPHA]* is defined if the MISO and MOSI are sampled on the leading (first) clock edge or on the trailing (second) clock edge, regardless of whether that clock edge is rising or falling. The *SPI_CONF[NUMBIT4:0]* defines how many bits the transaction is (1-bit to 24-bit transaction).

Copyright © 2023 Texas Instruments Incorporated

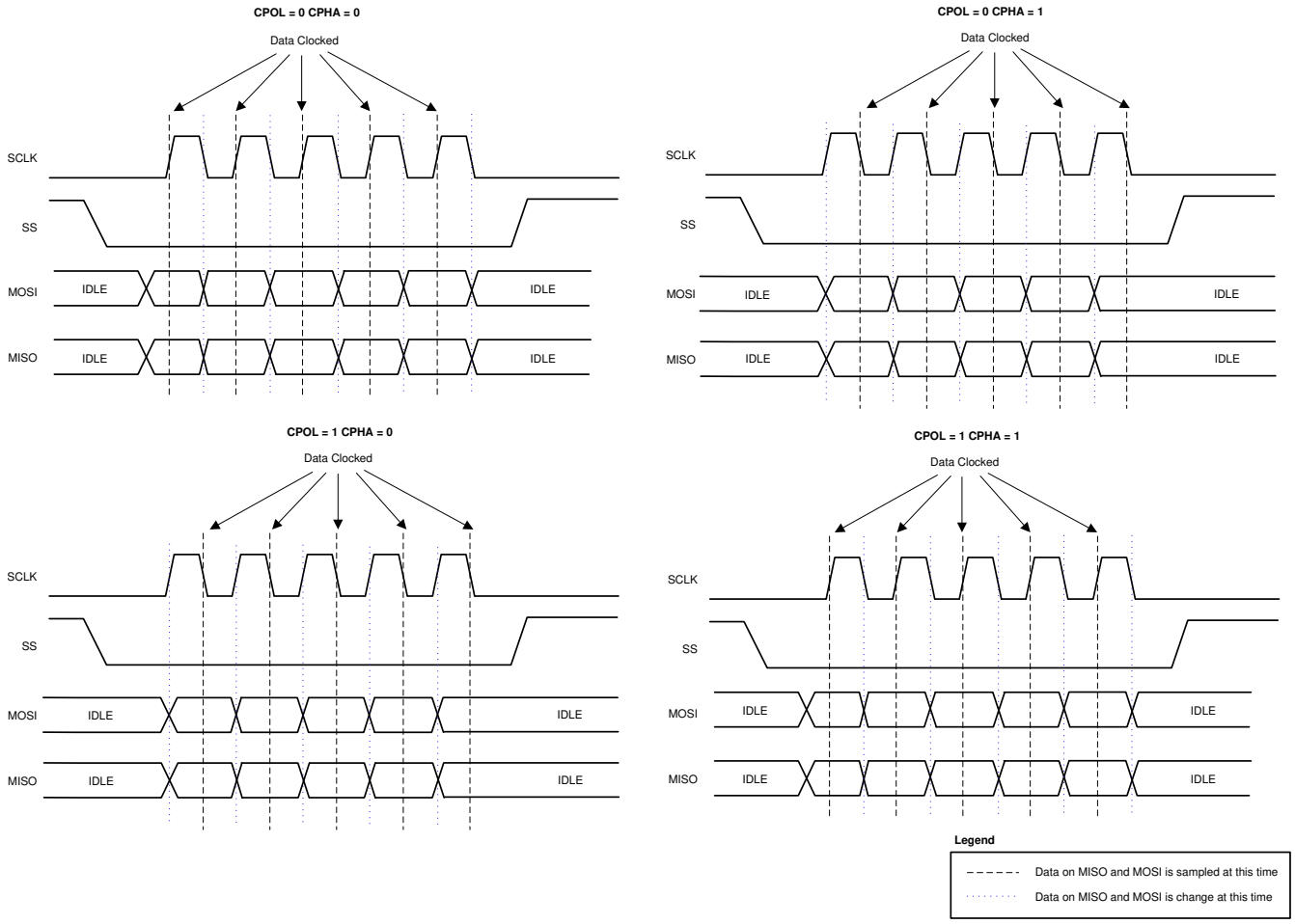

Figure 8-28. SPI Controller CPOL and CPHA

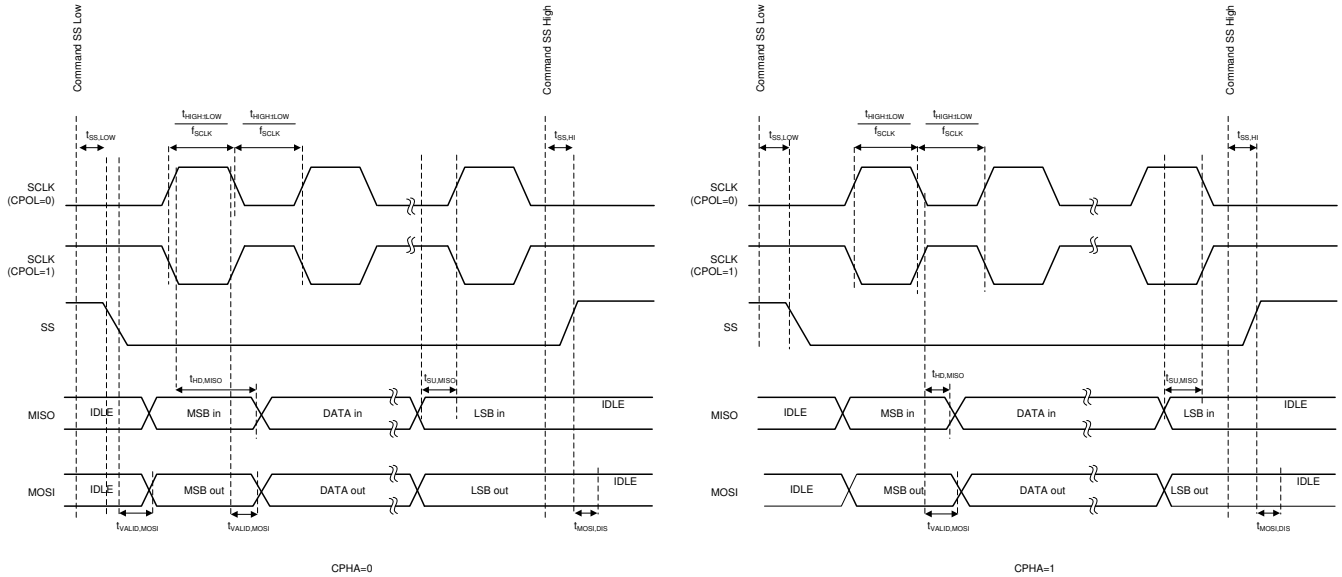

Figure 8-29. SPI Controller Timing Diagram

Copyright © 2023 Texas Instruments Incorporated

Table 8-15. Write to External SPI Peripheral

Step	Description
1	Configure the SPI clock polarity, clock phase, number of bit transactions: a. Write to *SPI_CONF* register to configure SPI communication
2	Write the data (from 1 to 24 bits, specified in the *SPI_CONF[NUMBIT4:0]* setting): a. Set up the data to send to SPI peripheral to the *SPI_TX1* to *SPI_TX3* registers b. *SPI_TX1* is the LSByte and *SPI_TX3* is MSByte
3	Select the peripheral (assuming active low) and execute the SPI write action: a. Send *SPI_EXE* register = 0x01 (that is, *[SS_CTRL]* = 0 and *[SPI_GO]* = 1)
4	Wait for the SPI communication to complete
5	Deselect the SS port (assuming active low, so deselecting means pull the SS pin high): a. Send *SPI_EXE* register = 0x02 (that is, *[SS_CTRL]* = 1 and *[SPI_GO]* = 0)

Table 8-16. Read from External SPI Peripheral

Step	Description
1	Configure the SPI clock polarity, clock phase, number of bit transactions: a. Write to *SPI_CONF* register to configure SPI communication
2	Select the peripheral and execute the SPI communication: a. Send *SPI_EXE* register = 0x01 (that is, *[SS_CTRL]* = 0 and *[SPI_GO]* = 1)
3	Wait for the data transaction to complete
4	Read the data (from 1 to 24 bits, specified in the *SPI_CONF[NUMBIT4:0]* setting): a. Read data from SPI peripheral from the *SPI_RX1* to *SPI_RX3* registers b. *SPI_TX1* is the LSByte and *SPI_TX3* is MSByte
5	Deselect the SS port (assuming active low, so deselecting means pull the SS pin high): a. Send *SPI_EXE* register = 0x02 (that is, *[SS_CTRL]* = 1 and *[SPI_GO]* = 0)

8.3.6.1.4 SPI Loopback

The SPI controller has a loopback function that is enabled using the *DIAG_COMM_CTRL[SPI_LOOPBACK]* bit. When enabled, the byte in the *SPI_TX** registers are clocked directly to the MISO pin of the SPI controller to verify the SPI controller functionality. This is performed internally, so no external connection is needed to run this test. This verifies that the SPI function is working correctly. The *SPI_CFG*, *SPI_TX**, and *SPI_EXE* registers are written as a normal SPI transaction, but the external pins do not toggle during this mode. That is, the external pins stay static in their last state and do not change state during the loopback operation.

The expected result of the test is that the byte in the *SPI_TX** register is read into the *SPI_RX** register. The SS pin is latched to the setting in *SPI_EXE[SS_CTRL]* that existed when the LOOPBACK mode was enabled. The CPHA and CPOL parameters must be set before entering LOOPBACK mode to ensure proper operation. Changing the CPOL or CPHA parameters while in LOOPBACK mode may result in errant pulses on the SPI outputs and is not recommended.

8.3.6.2 Fault Handling

8.3.6.2.1 Fault Status Hierarchy

The device monitors multiple types of faults such as:

- Battery cell monitoring through the hardware protector, like cell OV/UV, cell OT/UT, and so on
- System operation driven like device reset, communication timeout, thermal warning, and so on
- Command-based diagnostic check related like the various comparison through the main and AUX ADCs, BIST run, and so on
- Automatic diagnostic check running in the background like the internal power supplies, OTP CRC, and so on
- Communication fault.

Each bit in the *FAULT_SUMMARY* register represents a group of faults which are stored in one or more lower level fault registers. The *FAULT_SUMMARY* register represents the highest hierarchy level of fault status detected by the device. Host system can periodically poll the *FAULT_SUMMARY* register to check the fault status and only read the lower level fault registers if needed (for example, if *FAULT_SUMMARY[FAULT_OVUV]*

Copyright © 2023 Texas Instruments Incorporated

= 1, host can read *FAULT_OV1/2* and *FAULT_UV1/2* registers to determine which cell channel triggered the fault).

Table 8-17 shows which lower level register corresponds to the *FAULT_SUMMARY* register bit. The description of the register is covered in Section 8.5.

Table 8-17. Low-Level Fault Registers

FAULT_SUMMARY Bit Name	FAULT_PROT	FAULT_COMP_ADC	FAULT_OTP	FAULT_COMM	FAULT_OTUT	FAULT_OVUV	FAULT_SYS	FAULT_PWR
Lower level register name	*FAULT_PROT 1*	*FAULT_COMP_GPIO*	*FAULT_OTP* (1)	*FAULT_ COMM1* (1)	*FAULT_OT*	*FAULT_OV1*	*FAULT_SYS*	*FAULT_PWR1*
	FAULT_PROT 2	*FAULT_COMP_VCCB1*			*FAULT_UT*	*FAULT_OV2*		*FAULT_PWR2*
		FAULT_COMP_VCCB2				*FAULT_UV1*		*FAULT_PWR3*
		FAULT_COMP_VCOW1				*FAULT_UV2*		
		FAULT_COMP_VCOW2						
		FAULT_COMP_CBOW1						
		FAULT_COMP_CBOW2						
		FAULT_COMP_CBFET1						
		FAULT_COMP_CBFET2						
		FAULT_COMP_MISC						

(1) Some of the bits in the *FAULT_COMM1/2* and *FAULT_OTP* registers have a lower level of fault information than shown in the *DEBUG_COMM** and *DEBUG_OTP* registers.

8.3.6.2.1.1 Debug Registers

The *DEBUG_COMM** and *DEBUG_OTP* registers are a form of fault status showing lower hierarchy level of fault information for some of the bits in *FAULT_COMM1* and *FAULT_OTP*.

Table 8-18 shows the hierarchy relationship. See Section 8.5 for the register description details.

Table 8-18. Debug Registers

Low-level Fault Register	Low-level Register Bit		Associated DEBUG Registers
FAULT_COMM1	*[UART_RC]*	Fault related to received command frame from UART	*DEBUG_UART_RC*
	[UART_RR] [UART_TR]	Fault related to received or transmitted response frame from UART	*DEBUG_UART_RR_TR*
FAULT_OTP	*[SEC_DET]*	Single error correction in OTP	*DEBUG_OTP_SEC_BLK*
	[DED_DET]	Double error correction in OTP	*DEBUG_OTP_DED_BLK*

8.3.6.2.2 Fault Masking and Reset

8.3.6.2.2.1 Fault Masking

When a device detects a fault, the corresponding low-level register bit, including the one in the related bit in the *DEBUG_** registers is set. Based on the fault hierarchy relationship, the fault will be reflected in the *FAULT_SUMMARY* register.

A group of faults can be masked, which the related low-level register flag will still be set, but the fault will not be reflected to the corresponding *FAULT_SUMMARY* register. The faults can be masked through the *FAULT_MSK1* and *FAULT_MSK2* registers.

For example, to mask the *FAULT_SUMMARY[FAULT_OTUT]* being set, host sets *FAULT_MSK1[MSK_OT]* = 1 and *[MSK_UT]* = 1.

When fault is masked, it will also prevent the device from asserting the NFAULT pin when the masked fault occurs. See Section 8.3.6.2.3 for details on NFAULT signal.

Copyright © 2023 Texas Instruments Incorporated

Table 8-19. Fault Masking

	Masking Bit Name	Related Low-level Register(s) Affected	FAULT_SUMMARY Register Bit That Will Be Masked
FAULT_MSK1	*[MSK_PROT]*	*FAULT_PROT**	*[FAULT_PROT]*
	[MSK_UT]	*FAULT_UT*	*[FAULT_OTUT]*
	[MSK_OT]	*FAULT_OT*	
	[MSK_UV]	*FAULT_UV**	*[FAULT_OVUV]*
	[MSK_OV]	*FAULT_OV**	
	[MSK_COMP]	*FAULT_COMP_**	*[FAULT_COMP]*
	[MSK_SYS]	*FAULT_SYS*	*[FAULT_SYS]*
	[MSK_PWR]	*FAULT_PWR**	*[FAULT_PWR]*
FAULT_MSK2	*[MSK_OTP_CRC]*	*FAULT_OTP[CUST_CRC][FACT_CRC]*	*[FAULT_OTP]*
	[MSK_OTP_DATA]	All non-CRC bits in *FAULT_OTP*, *DEBUG_OTP_**	
	[MSK_COMM1]	*FAULT_COMM1*, *DEBUG_UART_**	*[FAULT_COMM1]*

8.3.6.2.2.2 Fault Reset

Once fault is detected, the fault status bit is latched until cleared using the reset bit. Similar to fault masking, when the specific fault reset bit is set, the associated low-level fault registers, including the *DEBUG_** registers are cleared. The corresponding bit in the *FAULT_SUMMARY* register will clear if all its associated low-level registers are cleared. If the fault condition persists and the reset bit is written, the fault status bit is not reset. The fault indicator cannot be reset until the underlying fault condition is eliminated.

The fault is reset through the *FAULT_RST1* and *FAULT_RST2* registers; the fault reset bits are structured in the same corresponding fault status registers as the fault masking bits.

8.3.6.2.3 Fault Signaling

Host can acquire the fault status with the following methods:

- Constantly polling the *FAULT_SUMMARY* status. If *FAULT_SUMMARY* is non-zero, read the low-level fault status registers to obtain more information.

The NFAULT pin can be masked by configuring *DEV_CONF[NFAULT_EN]* = 0. When NFAULT is disabled, the device will set the corresponding flag in *FAULT_SUMMARY* register but will not assert NFAULT.

8.3.6.3 Nonvolatile Memory

There are memory locations that are programmable in nonvolatile memory (NVM) using OTP (One Time Programmable). The memory space is divided in two groups, factory space and customer space. The factory space stores the device configurations that are essential for normal operation. This space is not accessible by the host. The customer space contains the device default setting that host system can customize for their application configuration. This space is readable and programmable by the host.

When a device reset occurs, factory and customer OTP values are reloaded to their shadow registers. Error check and correction (ECC), single error correction (SEC) and double error detection (DED), are performed during the factory and customer space OTP load. The corresponding *FAULT_OTP[SEC_DET]* or *FAULT_OTP[DED_DET]* will be set if an error is detected.

Any load errors of the factory OTP space signal a fault using the *FAULT_OTP[FACTLDERR]*. Any load errors of the customer OTP space signal a fault using the *FAULT_OTP[CUSTLDERR]*. Additionally, the OTP space (factory and customer) are protected from data integrity problems using CRC. The corresponding *FAULT_OTP[FACT_CRC]* and *[CUST_CRC]* bits will be set if a CRC error is detected.

If any overvoltage error conditions exist in the OTP pages space (factory and customer) during programming, the *OTP_FAULT[GBLOVERR]* bit is set. Information received from the device with this error must not be considered reliable.

Copyright © 2023 Texas Instruments Incorporated

8.3.6.3.1 OTP Page Status

There are two unused pages of OTP memory available for the customer to program. Each page status is held in the *OTP_CUST1_STAT* and *OTP_CUST2_STAT* registers. The registers provide information on the current status of the page such as:

- Load status (if loaded, loaded with error, loaded but failed)
- Programmed successfully or available to be programmed
- Programmed status

When a reset occurs, the device evaluates the OTP page status and chooses the latest and valid OTP page to load. Page 2 has priority over Page 1. If both pages have not been written, the factory OTP default are loaded. Section 8.5.1 shows all customer programmable OTP parameters. The register summary also shows the default values when Customer OTP Page 1 and Page 2 are not programmed.

- A valid page is one where the *OTP_CUST*_STAT[PROGOK]* = 1.
- When the page is selected for loading, the *OTP_CUST*_STAT1[LOADED]* = 1.
- If a single error occurs in the loading of the page, the page is loaded after the single error is corrected and the *OTP_CUST*_STAT1[LOADWRN]* = 1.
  - Additionally, the *DEBUG_OTP_SEC_BLK* register is updated with the location of the error corrected block.
- If a double error occurs, the loading of that block is terminated and the hardware defaults of that block are loaded (as indicated in Section 8.5.1).
  - The overall page loading process is not terminated for a DED, only the affected block is terminated.
  - When a DED occurs, the *OTP_CUST*_STAT1[LOADERR]* = 1. Additionally, the *DEBUG_OTP_DED_BLK* register is updated with the block where the double error occurred.

8.3.6.3.2 OTP Programming

Section 8.5.1 shows all parameters that can be programmed to the customer OTP page. There are two pages of OTP memory available for customer to use.

Before programming the OTP, host ensures:

- All OTP shadow registers have the correct settings
- A customer OTP page is valid to be programmed. A valid page is one with *OTP_CUST*_STAT1[TRY]* = 0 and *OTP_CUST*_STAT1[FMTERR]* = 0.

Table 8-20. Program the OTP

Step	Procedure
1	Unlock the OTP programming: a. Write the following data to *OTP_PROG_UNLOCK1A* to *OTP_PROG_UNLOCK1D* registers. • *OTP_PROG_UNLOCK1A* <- data 0x02 • *OTP_PROG_UNLOCK1B* <- data 0xB7 • *OTP_PROG_UNLOCK1C* <- data 0x78 • *OTP_PROG_UNLOCK1D* <- data 0xBC b. Do another write with the following data to *OTP_PROG_UNLOCK2A* to *OTP_PROG_UNLOCK2D* registers. • *OTP_PROG_UNLOCK2A* <- data 0x7E • *OTP_PROG_UNLOCK2B* <- data 0x12 • *OTP_PROG_UNLOCK2C* <- data 0x08 • *OTP_PROG_UNLOCK2D* <- data 0x6F Each block of registers must be written in order (that is, A, B, C, then D) with no other writes or reads between. The best practice is to use the same Write command to update. Any attempt to update the registers out of sequence, or if another register is written or read between writes, the entire sequence must be redone.
2	Check to confirm the OTP unlock procedure is successful: a. Read to confirm *OTP_PROG_STAT[UNLOCK]* = 1 Issuing a Read command after step 1 is ok, but issuing the *[PROG_GO]* must be the next write command after the unlock procedures.
3	Select the proper OTP page and start the OTP programming: a. To program page1, set *OTP_PROG_CTRL[PAGESEL][PROG_GO]* = 0x01, or b. To program page2, set *OTP_PROG_CTRL[PAGESEL][PROG_GO]* = 0x03

Copyright © 2023 Texas Instruments Incorporated

Table 8-20. Program the OTP (continued)

Step	Procedure
4	Wait t_{PROG} for the OTP programming to complete
5	Check to ensure there is no error during OTP programming. The following bits are expected to be 1 after a successful OTP programming: a. *OTP_PROG_STAT[DONE]* = 1, OTP programming is done. No other bit will be set in this register. b. If page 1 is programmed, *OTP_CUST1_STAT[PROGOK]*, *[TRY]*, *[OVOK]*, and *[UVOK]* bits are 1. Other bits are 0. c. If page 2 is programmed, *OTP_CUST2_STAT[LOADED]*, *[PROGOK]*, *[TRY]*, *[OVOK]*, and *[UVOK]* bits are 1. Other bits are 0.
6	Issue a digital reset to reload the registers with the updated OTP values: a. *CONTROL1[SOFT_RESET]* = 1

During programming, if a programming voltage OV or UV event occurs, the *OTP_CUST*_STAT[UVOK]* or *OTP_CUST_STAT2[OVOK]* bit is 0 to indicate the programming voltage under- or overvoltage condition is detected during the programing attempts. In addition, the *[UVERR]*, *[OVERR]*, *[SUVERR]*, and *[SOVERR]* bits in the *OTP_PROG_STAT* register indicate if there is programming voltage error during programming and stability test.

Note

- During the programming procedure, device performs a programming voltage stability test before actually programming the OTP. If a programming voltage fails the stability test, the device will not set the *OTP_CUST*_STAT[TRY]* bit, giving the customer another attempt to program the page again.
- If the host incorrectly selects a page for programming, the *OTP_PROG_STAT[PROGERR]* bit is set. This indicates that the selected page was not available to be programmed. Select the correct page and retry the programming.
- Device will not start OTP programming above 55°C temperature.
- OTP programming time (from [PROG_GO] = 1 to [DONE] =1) for LDOIN capacitor of 0.1µF is 100ms.

8.3.6.4 Diagnostic Control/Status

The device complies with applicable component level requirements for ASIL-D on voltage measurement, temperature measurement and communication. The following sub-sections describe the diagnostic control and fault status that can be used as part of the safety mechanisms.

The Safety Manual for BQ7961x-Q1 and the BQ79606-Q1 FMEDA documents are available separately from Texas Instruments. Contact TI Sales Associate or Applications Engineer for further information.

8.3.6.4.1 Power Supplies Check

8.3.6.4.1.1 Power Supply Diagnostic Check

The internal power supply circuits have overvoltage, undervoltage, oscillation detection, and/or current limit checks. All these detections are continuously running in the background when the device is in ACTIVE or SLEEP mode. If a failure is detected, the corresponding flags in the *FAULT_PWR** registers will be set or in certain failure modes, the device will reset. Table 8-21 summarizes the diagnostics that apply for each power supply and the corresponding action when failure is detected.

Table 8-21. Power Supply Diagnostic Checks

Supply/ Ground Pin	OV Check	UV Check	OSC Check	Current Limit	Pin Open
LDOIN					

Table 8-21. Power Supply Diagnostic Checks (continued)

Supply/ Ground Pin	OV Check	UV Check	OSC Check	Current Limit	Pin Open
AVDD	If this fails, set *FAULT_PWR1[AVDD_OV]*	If this fails, disable DVDD and trigger a digital reset. After soft reset, device sets *[AVDDUV_DRST]* to indicate a reset is caused by AVDD UV.	If fails, set *FAULT_PWR1[AVDD_OSC]*	Limit current to EC table current limit specification	
DVDD	If this fails, set *FAULT_PWR1[DVDD_OV]*	If this fails, trigger a digital reset		Limit current to EC table current limit specification	
CVDD	If this fails, set *FAULT_PWR1[CVDD_OV]*	If this fails, set *FAULT_PWR1[CVDD_UV]*		Limit current to EC table current limit specification	
TSREF	If this fails, set *FAULT_PWR2[TSREF_OV]* and *FAULT_OT* and *FAULT_UT* registers to all 1s.	If this fails, set *FAULT_PWR2[TSREF_UV]* and *FAULT_OT* and *FAULT_UT* registers to all 1s.	If fails, set *FAULT_PWR2[TSREF_OSC]* and *FAULT_OT* and *FAULT_UT* registers to all 1s.	Limit current to EC table current limit specification	
NEG5V		If this fails, set *FAULT_PWR2[NEG5V_UV]*			
REFHP/REFHM			If REFHP fails, set *FAULT_PWR2[REFH_OSC]*		If REFHM opens, set the *FAULT_PWR1[REFHM_OPEN]*
DVSS					If this opens, set the *FAULT_PWR1[DVSS_OPEN]*
CVSS					If this opens, set the *FAULT_PWR1[CVSS_OPEN]*

Note

Due to the detection logic implemented, when AVDD OV or UV is detected, the AVDD OSC fault can also be triggered. Similarly, when TSREF OV or UV, the TSREF OSC fault can also be triggered.

8.3.6.4.1.2 Power Supply BIST

The device implements a power supply BIST (Built-In Self-Test) function to test the primary power supply failure diagnostic paths that cover the following detections:

- *FAULT_PWR1[AVDD_OV]*, *[AVDD_OSC]*, *[DVDD_OV]*, *[CVDD_OV]*, *[CVDD_UV]*, *[REFHM_OPEN]*, *[DVSS_OPEN]*, and *[CVSS_OPEN]*
- *FAULT_PWR2[TSREF_OV]*, *[TSREF_UV]*, *[TSREF_OSC]*, *[NEG5V_UV]*, *[REFHM_OSC]*,and *[PWRBIST_FAIL]*

The power supply BIST is essentially a check on the checker and it is a command base function initiated by host.

The power supply BIST, once started, will force a fault on failure detection path on each supply. Take AVDD OV diagnostic path as an example, when the BIST engine tests the AVDD OV path, the following occur:

1. The BIST engine forces a fail to the AVDD OV comparator
2. The BIST engine then checks to ensure the signal to trigger *FAULT* register is asserted, and the signal to trigger NFAULT is also asserted
3. The BIST engine resets the *FAULT* register and NFAULT signal (that is, clears the *FAULT_PWR1/2/3* registers and deasserts NFAULT)

Copyright © 2023 Texas Instruments Incorporated

4. The BIST engine repeats step 1 to step 3 on the next power supply diagnostic path check (for example, AVDD OSC) until all intended diagnostic paths covered by BIST are tested.

Note

- During the BIST run, the NFAULT pin will be toggled on and off. Host ignores the NFAULT pin status or can disable the NFAULT pin output by setting *DEV_CONF[NFAULT_EN]* = 0.
- Among all internal power supplies, TSREF is one that can be enabled or disabled by host. To ensure TSREF diagnostic paths are tested during BIST run, host enables TSREF before starting the power supply BIST. Otherwise, the BIST engine will ignore the TSREF diagnostic paths test result during the BIST run.
- Because other nonpower supply-related faults can also trigger NFAULT, it is recommended to mask all nonpower supply-related faults through *FAULT_MSK1/2* registers before the power supply BIST run.
- Host also ensures there are no power supply faults before starting the power supply BIST run.

Start power supply BIST by sending *DIAG_PWR_CTRL[PWR_BIST_GO]* = 1. The BIST run will not abort even if a failure is detected during the run. At the end of the BIST run, the result is indicated by the *FAULT_PWR2[PWRBIST_FAIL]* flag.

The power supply BIST forces a failure and ensures the diagnostic path triggers the fault accordingly. A failure on the BIST run indicates a diagnostic path is unable to trigger in a fault condition. To further examine which path is unable to indicate a failure, host can set the *DIAG_PWR_CTRL[BIST_NO_RST]* = 1. This bit disables the reset step during the BIST run. Re-start power supply BIST with this option enabled. At the end of the BIST run, examine the *FAULT_PWR1* and *FAULT_PWR2* registers. Any register flag that remains 0 indicates it is unable to flag a failure.

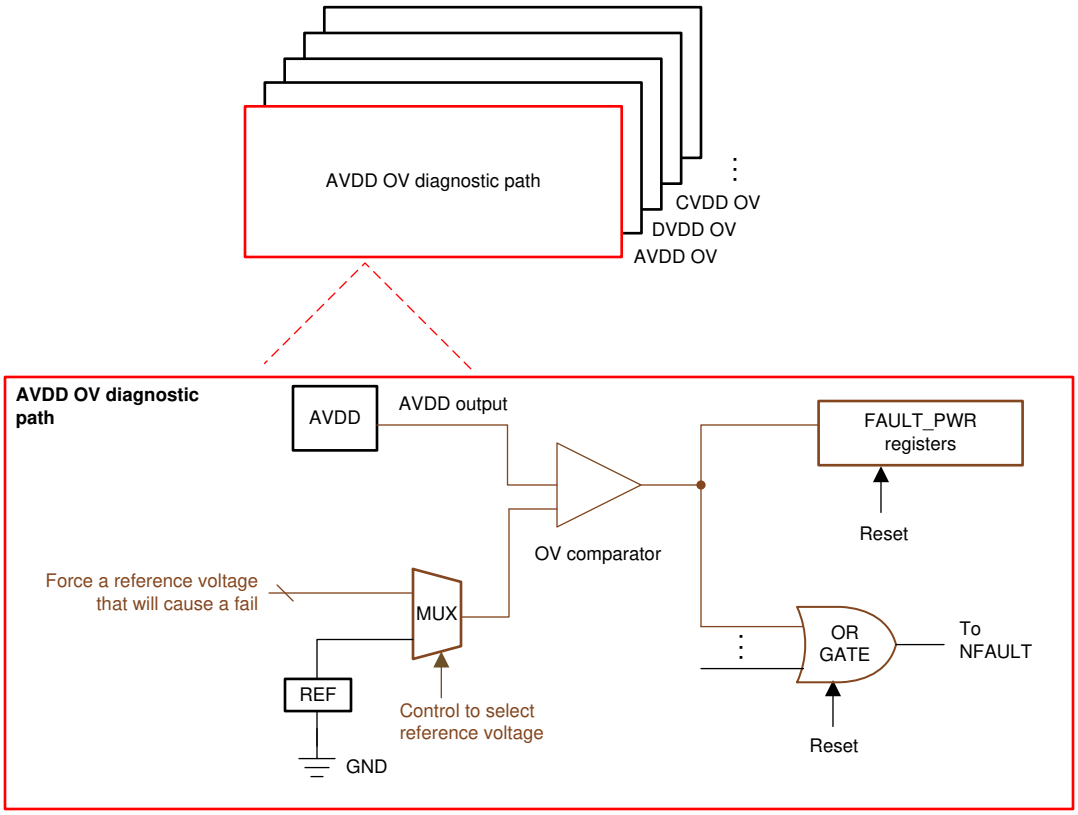

Figure 8-30. Power Supply BIST

8.3.6.4.2 Thermal Shutdown and Warning Check

8.3.6.4.2.1 Thermal Shutdown

Thermal shutdown occurs when the thermal shutdown sensor senses an overtemperature condition of the device. The sensor operates without interaction and is separated from the ADC measured die sensor. The thermal shutdown function has a register-status indicator flag (*FAULT_SYS[TSHUT]*) that is saved during the shutdown event and can be read after the device is awaken back up. When a TSHUT fault occurs, the part immediately enters the SHUTDOWN mode. Any pending transactions on UART are discarded. There is no fault signaling performed when a thermal shutdown event occurs as the device immediately shuts down.

To awaken the device, host ensures the ambient temperature is below T_{SHUT_FALL} and sends a WAKE ping to the device. Host will not attempt to wake the device if the ambient temperature is still above T_{SHUT_FALL}.

Upon waking up, the *FAULT_SYS[TSHUT]* bit is set. See Section 8.4.1.1 for more details. If the system faults are unmasked, *FAULT_MSK1[MSK_SYS]* = 0, the thermal shutdown will be reflected as a fault and will be indicated in the *FAULT_SUMMARY* register and the assertion of the NFAULT pin.

8.3.6.4.2.2 Thermal Warning

To warn the host of an impending thermal overload the device includes an overtemperature warning that signals a fault when the die temperature approaches thermal shutdown. The device detects the die temperature through the TWARN sensor against the thermal warning threshold. There are four threshold options configured by the *PWR_TRANSIT_CONF[TWARN_THR1:0]* setting.

When the system fault is unmasked, and the temperature warning fault occurs, the *FAULT_SYS[TWARN]* = 1. Host can take action to avoid a thermal shutdown.

8.3.6.4.3 Oscillators Watchdog

The oscillators are monitored by watchdog circuits. There are two oscillators in the device, the HFO and the LFO. If these oscillators are not functioning, the device does not operate. If the HFO or LFO does not transition within the expected time, the watchdog circuits causes a digital reset.

When this unexpected reset occurs, it is recommended that the host sends a SHUTDOWN ping to the problem device and then send a WAKE ping to reset. If the oscillators are truly damaged, the device will not restart and must be replaced.

In addition to the watchdog, the LFO frequency is monitored to ensure it stays within acceptable limits. If the LFO frequency falls outside of the expected range, the *FAULT_SYS_FAULT[LFO]* bit is set.

8.3.6.4.4 OTP Error Check

8.3.6.4.4.1 OTP CRC Test and Faults

CRC Test:

The factory registers and customer OTP shadow registers are covered by a CRC check that constantly runs in the background. The *CUST_CRC_RSLT_HI* and *CUST_CRC_RSLT_LO* registers hold the current device's computed CRC value. This value is compared against the customer programmed value in the CRC registers, *CUST_CRC_HI* and *CUST_CRC_LO*. When updating any customer OTP shadow register covered in the CRC, the host must update a new CRC value to *CUST_CRC_HI* and *CUST_CRC_LO* registers. The CRC calculation is performed in the same manner (including the bit stream ordering) and with the same polynomial as described in Section 8.3.6.1.1.2.1.6. The CRC check and comparison for factory and customer spaces is performed periodically and the *DEV_STAT[CUST CRC_DONE]* and *[FACT_CRC_DONE]* bits are set after the check is complete. If the bit is already set, it remains set until cleared with a read.

CRC Faults:

When *CUST_CRC_HI/LO* and *CUST_CRC_RSLT_HI/LO* do not match, the *FAULT_OTP[CUST_CRC]* flag is set until the condition is corrected. Continuous monitoring of the factory NVM space occurs in a similar fashion, concurrently with the monitoring of the customer space. When a factory register change is detected, the *FAULT_OTP[FACT_CRC]* flag is set. When this fault occurs, the host should reset the fault flag to see if the

Copyright © 2023 Texas Instruments Incorporated

fault persists. If the fault persists, the host must perform a reset of the part. If reset does not correct the issue, the device is corrupted and must not be used.

8.3.6.4.4.2 OTP Margin Read

The device provides OTP margin read test modes, with which host can set up to reload the OTP with margin 1 or margin 0. To start the margin read test, host selects the desired test mode through *DIAG_OTP_CTRL[MARGIN_MODE2:0]* and sets *DIAG_OTP_CTRL[MARGIN_GO]* = 1. The device will reload the OTP per the *[MARGIN_MODE2:0]* setting. Any OTP related error will be flagged to the *FAULT_OTP* register.

8.3.6.4.4.3 Error Check and Correct (ECC) OTP

ECC:

Register values for selected registers (0x0000 to 0x002F) are permanently stored in OTP. All registers also exist as volatile storage locations at the same addresses, referred to as shadow registers. The volatile registers are for reading, writing, and device control. For a list of registers included in the OTP, see Section 8.5.1.

During wakeup, the device first loads all shadow registers with hardware default values listed in Section 8.5.1. Then the device loads the registers conditionally with OTP contents from the results of the Error Check and Correct (ECC) evaluation of the OTP. The OTP is loaded to shadow registers in 64-bit blocks; each block has its own Error Check and Correct (ECC) value stored. The ECC detects a single-bit (Single-Error-Correction) or double-bit (Double-Error-Detection) changes in OTP stored data. The ECC is calculated for each block, individually.

Single-bit errors are corrected, double-bit errors are only detected, not corrected. A block with good ECC is loaded. A block with a single-bit error is corrected, and the *FAULT_OTP[SEC_DET]* bit is set to flag the corrected error event. Additionally, the *DEBUG_OTP_SEC_BLK* register is updated with the location of the error corrected block. This enables the host to keep track of potentially damaged memory. The block is loaded to shadow registers after the single-bit error correction. Because the evaluation is on a block-by-block basis, it is possible for multiple blocks to have a single-correctable error and still be loaded correctly. Multiple-bit errors can exist with full correction, as long as they are limited to a single error per block.

A block with a bad ECC comparison (two-bit errors in one block) is not loaded and the *FAULT_OTP[DED_DET]* bit is set to flag the failed bit-error event. Additionally, the *DEBUG_OTP_DED_BLK* register is updated with the block where the double error occurred. The hardware default value remains in the register. This allows some blocks to be loaded correctly (no fail or single-bit corrected value) and some blocks not to load. When the *FAULT_OTP[SEC_DET]* or *FAULT_OTP[DED_DET]* bit is set and the condition is not cleared by a device reset, the device is corrupted and must not be used.

The ECC engine uses the industry standard 72,64 SEC DEC ECC implementation. The OTP is protected by a (72, 64) Hamming code, providing single error correction, double error detection (SECDED). For each 64 bits of data stored in OTP, an additional 8 bits of parity information are stored. The parity bits are designated p0, p1, p2, p4, p8, p16, p32, and p64. Bit p0 covers the entire encoded 72-bit ECC block. The remaining seven parity bits are assigned according to the following rule:

- Parity bit p1 covers odd bit positions, that is, bit positions which have the least significant bit of the bit position equal to 1 (1, 3, 5, and so on), including the p1 bit itself (bit 1).
- Parity bit p2 covers bit positions which have the second least significant bit of the bit position equal to 1 (2, 3, 6, 7, 10, 11, and so on), including the p2 bit itself (bit 2).
- The pattern continues for p4, p8, p16, p32, and p64. Table 8-22 specifies the complete encoding.

Copyright © 2023 Texas Instruments Incorporated

Table 8-22. (72, 64) Parity Encoding

Bit Position		71	70	69	68	67	66	65	64	63	62	61	60	59	58	57	56	55	54
Encoded Bits		d63	d62	d61	d60	d59	d58	d57	p64	d56	d55	d54	d53	d52	d51	d50	d49	d48	d47
Parity Bit Coverage	p0	x	x	x	x	x	x	x	x	x	x	x	x	x	x	x	x	x	x
	p1	x		x		x		x		x		x		x		x		x	
	p2	x	x			x	x			x	x			x	x			x	x
	p4	x	x	x	x					x	x	x	x					x	x
	p8									x	x	x	x	x	x	x	x		
	p16									x	x	x	x	x	x	x	x	x	x
	p32									x	x	x	x	x	x	x	x	x	x
	p64	x	x	x	x	x	x	x	x										
Bit Position		53	52	51	50	49	48	47	46	45	44	43	42	41	40	39	38	37	36
Encoded Bits		d46	d45	d44	d43	d42	d41	d40	d39	d38	d37	d36	d35	d34	d33	d32	d31	d30	d29
Parity Bit Coverage	p0	x	x	x	x	x	x	x	x	x	x	x	x	x	x	x	x	x	x
	p1	x		x		x		x		x		x		x		x		x	
	p2			x	x			x	x			x	x			x	x		
	p4	x	x					x	x	x	x					x	x	x	x
	p8							x	x	x	x	x	x	x	x				
	p16	x	x	x	x	x	x												
	p32	x	x	x	x	x	x	x	x	x	x	x	x	x	x	x	x	x	x
	p64																		
Bit Position		35	34	33	32	31	30	29	28	27	26	25	24	23	22	21	20	19	18
Encoded Bits		d28	d27	d26	p32	d25	d24	d23	d22	d21	d20	d19	d18	d17	d16	d15	d14	d13	d12
Parity Bit Coverage	p0	x	x	x	x	x	x	x	x	x	x	x	x	x	x	x	x	x	x
	p1	x		x		x		x		x		x		x		x		x	
	p2	x	x			x	x			x	x			x	x			x	x
	p4					x	x	x	x					x	x	x	x		
	p8					x	x	x	x	x	x	x	x						
	p16					x	x	x	x	x	x	x	x	x	x	x	x	x	x
	p32	x	x	x	x														
	p64																		
Bit Position		17	16	15	14	13	12	11	10	9	8	7	6	5	4	3	2	1	0
Encoded Bits		d11	p16	d10	d9	d8	d7	d6	d5	d4	p8	d36	d2	d1	p4	d0	p2	p1	p0
Parity Bit Coverage	p0	x	x	x	x	x	x	x	x	x	x	x	x	x	x	x	x	x	x
	p1	x		x		x		x		x		x		x		x		x	
	p2			x	x			x	x			x	x			x	x		
	p4			x	x	x	x					x	x	x	x				
	p8			x	x	x	x	x	x	x	x								
	p16	x	x																
	p32																		
	p64																		

Copyright © 2023 Texas Instruments Incorporated

Table 8-23. Encoder and Decoder Data IN and OUT Positioning

ENCODER			
DATA IN	**Encoded Bits**	**DATA OUT**	**Bit Positions**
OTP_ECC_DATAIN 1	d0 to d7	OTP_ECC_DATAOUT 1	0 to 7
OTP_ECC_DATAIN 2	d8 to d15	OTP_ECC_ DATAOUT 2	8 to 15
OTP_ECC_DATAIN 3	d16 to d23	OTP_ECC_ DATAOUT 3	16 to 23
OTP_ECC_DATAIN 4	d24 to d31	OTP_ECC_ DATAOUT 4	24 to 31
OTP_ECC_DATAIN 5	d32 to d39	OTP_ECC_ DATAOUT 5	32 to 39
OTP_ECC_DATAIN 6	d40 to d47	OTP_ECC_ DATAOUT 6	40 to 47
OTP_ECC_DATAIN 7	d48 to d55	OTP_ECC_ DATAOUT 7	48 to 55
OTP_ECC_DATAIN 8	d56 to d63	OTP_ECC_ DATAOUT 8	56 to 63
		OTP_ECC_ DATAOUT 9	64 to 71
DECODER			
DATA IN	**Bit Positions**	**DATA IN**	**Encoded Bits**
OTP_ECC_DATAIN 1	0 to 7	OTP_ECC_DATAOUT 1	d0 to d7
OTP_ECC_DATAIN 2	8 to 15	OTP_ECC_ DATAOUT 2	d8 to d15
OTP_ECC_DATAIN 3	16 to 23	OTP_ECC_ DATAOUT 3	d16 to d23
OTP_ECC_DATAIN 4	24 to 31	OTP_ECC_ DATAOUT 4	d24 to d31
OTP_ECC_DATAIN 5	32 to 39	OTP_ECC_ DATAOUT 5	d32 to d39
OTP_ECC_DATAIN 6	40 to 47	OTP_ECC_ DATAOUT 6	d40 to d47
OTP_ECC_DATAIN 7	48 to 55	OTP_ECC_ DATAOUT 7	d48 to d55
OTP_ECC_DATAIN 8	56 to 63	OTP_ECC_ DATAOUT 8	d56 to d63
OTP_ECC_DATAIN 9	64 to 71		

ECC Diagnostic Test: The device provides a diagnostic tool to test the ECC function. There are two modes that are available to run the diagnostic. The first, auto mode (*OTP_ECC_TEST[MANUAL_AUTO]* = 0), uses internal data to run the tests. In auto mode, the *OTP_ECC_TEST[DED_SEC]* bit selects the type of test that is to be performed and the *OTP_ECC_TEST[ENC_DEC]* bit determines if the encoder or decoder function is to be tested. The result of the ECC test is provided in the *OTP_ECC_DATAOUT** registers within 1µs delay. The test steps and expected results from each test are shown below.

Automatic Decoding steps:

1. Set ECC Test to automatic *OTP_ECC_TEST[MANUAL_AUTO]* = 0
2. Set decoder setting *OTP_ECC_TEST[ENC_DEC]* = 0
3. Set decoder to single or double encoding setting with *OTP_ECC_TEST[DED_SEC]* (1 for DED or 0 for SEC)
4. Clear all SEC/DED faults by *FAULT_RST2[RST_OTP_DATA]* = 1
5. Enable ECC test *OTP_ECC_TEST[ENABLE]* = 1
6. Read *FAULT_OTP[SEC_DET]* flag for SEC or *FAULT_OTP[DED_DET]* flag for DED
7. Block read *OTP_ECC_DATAOUT1* to *OTP_ECC_DATAOUT8* to verify the decoder test results as in Table 8-24
8. Disable ECC test *OTP_ECC_TEST[ENABLE]* = 0

Automatic Encoding steps:

1. Set ECC TEST to automatic *OTP_ECC_TEST[MANUAL_AUTO]* = 0
2. Set the encoder setting using *OTP_ECC_TEST[ENC_DEC]* = 1
3. Enable the ECC test with *OTP_ECC_TEST[ENABLE]* = 1
4. Block read *OTP_ECC_DATAOUT1* to *OTP_ECC_DATAOUT9* to verify the encoder test results as in Table 8-24
5. Disable ECC test *OTP_ECC_TEST[ENABLE]* = 0

Copyright © 2023 Texas Instruments Incorporated

Table 8-24. Decoder and Encoder Test Verification

[DED_SEC]	*[ENC_DEC]*	*[SEC_DET]*	*[DED_DET]*	*OTP_DATAOUT**
0 (SEC test)	0 (Decoder test)	1	0	0x18C3 FF8A 68A9 8069
0 (SEC test)	1 (Encoder test)	N/A	N/A	0xCD 3968 C140 2EA5 ED6D
1 (DED test)	0 (Decoder test)	0	1	0x0000 0000 0000 0000
1 (DED test)	1 (Encoder test)	N/A	N/A	0xCD 3968 C140 2EA5 ED6D

8.3.6.4.5 Integrated Hardware Protector Check

8.3.6.4.5.1 Parity Check

When the OVUV and OTUT protectors are enabled, the register settings related to the OVUV and OTUT configurations are latched to protector blocks. The device will check periodically in the background to ensure the latched configurations remain the same throughout the protector operation.

The parity check covers the following latched setting. If a parity fault in the OVUV protector is detected, the device will set the *FAULT_PROT1[VPARITY_FAIL]* = 1. If a parity fault in the OTUT protector is detected, the device will set the *FAULT_PROT1[TPARITY_FAIL]* = 1.

Table 8-25. Protector Parity Check Settings

OVUV Protector	OTUT Protector	Note
OV threshold, UV threshold	OT threshold, UT threshold	Ensure threshold settings remains the same during the operation
OVUV_MODE setting	OTUT_MODE setting	Ensure the protector doesn't switch to a different operation mode
NUM_CELL setting	*GPIO_CONF1* to *GPIO_CONF4* settings	Ensure the active channel (either cell channels for OVUV or GPIO channel for OTUT) remains the same during operation

8.3.6.4.5.2 OVUV and OTUT DAC Check

The OV, UV, OT, and UT DAC values are multiplexed to the AUX ADC from which the host can read out the values as part of the diagnostic check on the protector threshold settings.

To measure the protector's DAC value, it is recommended to lock the OVUV or OTUT protectors to a single channel through *OVUV_CTRL[OVUV_LOCK3:0]* for OV and UV DAC measurement; and through *OTUT_CTRL[OTUT_LOCK2:0]* for OT and UT DAC measurement, and restart the OVUV protectors or OTUT protector to run in the single channel run mode. Host ensures the locked cell channel is not under OV or UV fault or the locked GPIO channel is not under OT or UT fault. Otherwise, the DAC measurement will not be reflecting the triggering threshold value. Note that the OV and UV DAC value is (0.8 x the threshold setting).

8.3.6.4.5.3 OVUV Protector BIST

The device implemented an OVUV BIST (Built-In-Self-Test) function to test the primary OVUV protector path. Host can start the BIST run by setting *[OVUV_MODE1:0]* = 0b10 and *[OVUV_GO]* = 1. The BIST run covers:

1. OV and UV comparators thresholds:
   a. A higher and lower than the set threshold are checked to ensure the comparator is triggered correctly.
   b. If failure is detected, the corresponding *FAULT_PROT2[OVCOMP_FAIL]* or *[UVCOMP_FAIL]* bit will be set.
2. The path from the OVUV MUX to UV fault status bit and NFAULT pin:
   a. For each VC channel, a switch is open so that input to the OVUV MUX is open and will lead to a UV detection to the channel under test
   b. The BIST engine then checks the logic to assert corresponding *FAULT_UV* register bit and the NFAULT is set properly.
   c. The BIST engine resets the corresponding *FAULT_UV* bit and deasserts the NFAULT, then switches to test the next channel and repeats the process until all active channels are tested.
   d. If failure is detected, the corresponding *[VPATH_FAIL]* bit is set.
3. OV fault bit and NFAULT path

Copyright © 2023 Texas Instruments Incorporated

a. The BIST engine forces 1 to the *FAULT_OV** register, one bit at time, to ensure each *FAULT_OV** register bit can be set and the NFAULT can be asserted, accordingly.
b. If failure is detected, the corresponding *[VPATH_FAIL]* bit will be set.

If NFAULT is enabled, host observes NFAULT toggling during the BIST run. Upon completion of the BIST run, the OVUV comparators will be turned off. Host starts the regular OVUV round robin mode by sending *[OVUV_GO]* = 1 with *[OVUV_MODE1:0]* = 0b01 (round robin mode).

Note

- If a *[OVUV_GO]* = 1 is sent during the OVUV BIST run, device will execute the new GO command based on the *[OVUV_MODE1:0]* setting.
- Before starting the OVUV Protector BIST, host masks out all the non-OVUV related faults, and ensures there are no OV and UV faults on any cell channels (recommended all cell voltages to be at least 100 mV apart from the OV or UV threshold during the BIST run). Otherwise, the BIST result is not invalid.
- After BIST starts, if pre-existing fault is detected before starting step 2, the BIST engine will be aborted and the *FAULT_PROT2[BIST_ABORT]* = 1.
- A no reset option, *DIAG_PROT_CTRL[PROT_BIST_NO_RST]* = 1, is available to command the BIST engine not to reset the fault status and NFAULT pin after testing each channel. If a BIST run fails, host can select this option and re-run BIST to detect which cell channel path is unable reflect a fault condition in the fault registers.

8.3.6.4.5.4 OTUT Protector BIST

The device implemented an OTUT BIST function to test the primary OTUT protector path. Host can start the BIST run by setting *[OTUT_MODE1:0]* = 0b10 and *[OTUT_GO]* = 1. The BIST run covers:

1. OT and UT comparator thresholds
   a. A higher and lower than the set threshold are checked to ensure the comparator is triggering correctly.
   b. If failure is detected, the corresponding *FAULT_PROT2[OTCOMP_FAIL]* or *[UTCOMP_FAIL]* bit will be set.
2. The path from GPIO MUX to UT fault bit and NFAULT path
   a. For each GPIO channel, the GPIO is internally pulled up so the input to the OTUT MUX is high and will lead to a UT detection to the channel under test.
   b. The BIST cycle then checks the logic to assert the corresponding *FAULT_UT* register bit and the NFAULT is set properly.
   c. The BIST engine resets the corresponding *FAULT_UT* bit and deasserts the NFAULT, then switches to test the next channel.
   d. If failure is detected, the corresponding *[TPATH_FAIL]* bit will be set.
3. OV fault bit and NFAULT path
   a. The BIST engine forces 1 to the *FAULT_OT* register, one bit at time, to ensure each *FAULT_OT* register bit can be set and the NFAULT can be asserted, accordingly.
   b. If failure is detected, the corresponding *[TPATH_FAIL]* bit will be set.

If NFAULT is enabled, host observes NFAULT toggling during the BIST run. Upon completion of the BIST run, the OTUT comparators will be turned off. Host starts the regular OTUT round robin mode by sending *[OTUT_GO]* = 1 with *[OTUT_MODE1:0]* = 0b01 (round robin mode).

Copyright © 2023 Texas Instruments Incorporated

Note

- If a *[OTUT_GO]* = 1 is sent during the OTUT BIST run, device will execute the new GO command based on the *[OVUV_MODE1:0]* setting.
- Before starting the OTUT Protector BIST, host masks out all non-OTUT related faults, and ensures there are no OT and UT faults on any GPIO during the BIST run). Otherwise, the BIST result is invalid.
- After BIST starts, if pre-existing fault is detected before starting step 2, the BIST engine will be aborted and the *FAULT_PROT2[BIST_ABORT]* = 1.
- A no reset option, *DIAG_PROT_CTRL[PROT_BIST_NO_RST]* = 1, is available to command the BIST engine not to reset the fault status and NFAULT pin after testing each channel. If a BIST run fails, host can select this option and re-run BIST to detect which GPIO channel path is unable reflect a fault condition in the fault registers.

8.3.6.4.6 Diagnostic Through ADC Comparison

8.3.6.4.6.1 Cell Voltage Measurement Check

Cell voltage measurement path comparison:

The cell voltage measurement check is performed by comparing the prefiltered measurement result from Main ADC versus measurement result from AUX ADC. To read the compared value measured by Main ADC and AUX ADC, MCU has to set up this diagnostic check to lock on a single channel using *[AUX_CELL_SEL]* setting and the start this diagnostic check. In this configuration, the compared values from Main ADC and AUX ADC are reported to *DIAG_MAIN_HI/LO* registers and *DIAG_AUX_HI/LO* registers respectively.

Both Main and AUX ADC has the same front end filters. This diagnostic time is mostly spend on waiting for the AAF on the AUX ADC path to settle. The *[AUX_SETTLE]* setting allows the MCU to make trade-off between diagnostic time and noise filter level. Additionally, when AUX ADC starts, by default, AUXCELL slot always align to the Main ADC Cell1 slot. The *[AUX_CELL_ALIGN]* setting allows MCU to change this alignment to Main ADC Cell8 slot, resulting with less sampling time delta between Main and AUX ADC on the higher channels.

The device does not do on-chip measurement check for SRP/SRN signal.

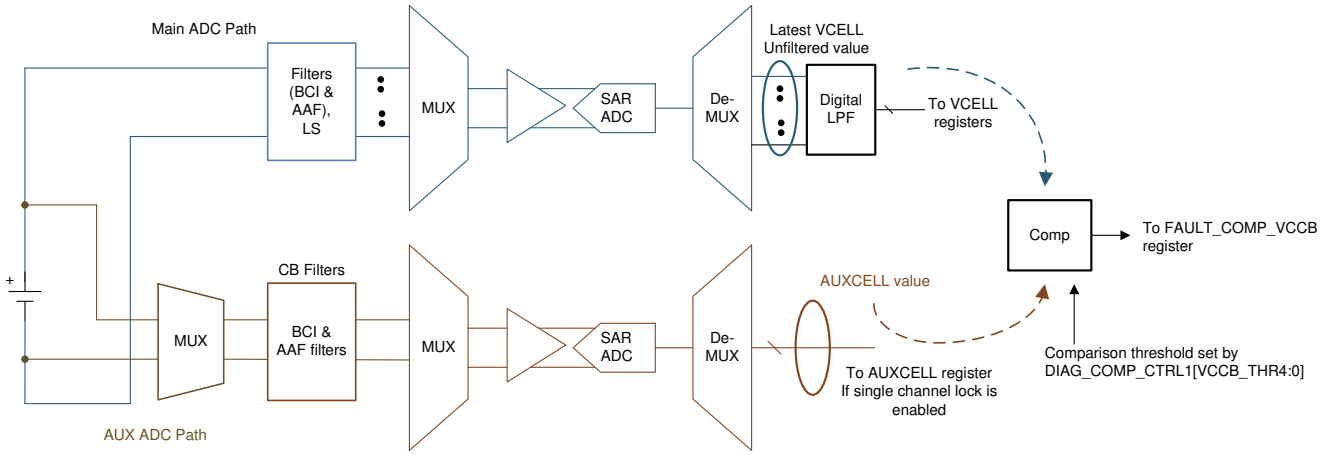

Figure 8-31. Cell Voltage Measurement Diagnostic

Before starting the cell voltage measurement comparison, host ensures:

- The desired AUXCELL channels to be tested are configured in the *ADC_CTRL2[AUX_CELL_SEL4:0]* setting and AUX ADC is enabled and in continuous mode.
- Allow AUX ADC to run through all AUXCELL channels for the devie to compensate for common mode error before starting this diagnostic check.
- Main ADC must be enabled and is in continuous mode.

Copyright © 2023 Texas Instruments Incorporated

- Select the (VCELL – AUXCELL) comparison threshold through *DIAG_COMP_CTRL1[VCCB_THR4:0]* setting.
- Select the desired settling time for the AUX CELL channel through *ADC_CONF1[AUX_SETTLE1:0].*

To start the cell voltage measurement comparison:

1. Set *DIAG_COMP_CTRL3[COMP_ADC_SEL2:0]* = cell voltage measurement check (that is, 0b001) and set *[COMP_ADC_GO]* = 1.
2. For each channel enabled by *[AUX_CELL_SEL4:0]*, the device will compare abs[(VCELL – AUXCELL)] < *[VCCB_THR4:0]*.
3. Wait for the comparison to be accomplished, roughly [(number of channel) * (AUXCELL settling time + one round robin cycle time)].
4. The cell voltage measurement comparison is completed when *ADC_STAT2[DRDY_VCCB]* = 1.

Host checks the *FAULT_COMP_VCCB2* register for the comparison result.

ADC comparison abort conditions:

The device will not start the cell voltage measurement comparison under the invalid conditions listed below. When the comparison is aborted, the *FAULT_COMP_MISC[COMP_ADC_ABORT]* = 1, *[DRDY_AUX_CEL]* = 1, *[DRDY_VCCB]* = 1, and *FAULT_COMP_VCCB2* register = 0xFF. If *[AUX_CELL_SEL4:0]* is set to locked at a single channel, the *AUX_CELL_HI/LO* registers will be reset to default value 0x8000 if the comparison run is aborted.

Invalid conditions or settings which will prevent the start of the cell voltage measurement comparison:

- Invalid *[AUX_CELL_SEL]* setting: results in no AUX ADC measurement on the selected channel. The *AUX_CELL_HI/LO* registers are kept in default value.
- Channel higher than the NUM_CELL configuration is selected.
- Main or AUX ADCs are off or not set in continuous mode.

Post-ADC digital LPF check:

The digital LPF is checked continuous whenever the Main ADC is running. A duplicate diagnostic LPF is implemented to check against each LPF for each VC channel. The check is performed with one LPF at a time.

Example, to test LPF1 for cell channel 1, the input (that is, ADC measurement result from cell 1) is fed to the LPF1 and the diagnostic LPF for a period of time. The output of the LPF1 and the diagnostic LPF are compared against each other. Several outputs from LPF1 and diagnostic LPF will be compared to ensure the operation of the LFP1 before moving to check the next LFP. If any of the LPFs fail the diagnostic check, *FAULT_COMP_MISC[LPF_FAIL]* = 1.

When the LPF for each active cell channels is tested once, *ADC_STAT2[DRDY_LPF]* = 1. This diagnostic check of the LPFs will continuously run in the background as long as the Main ADC is running.

Copyright © 2023 Texas Instruments Incorporated

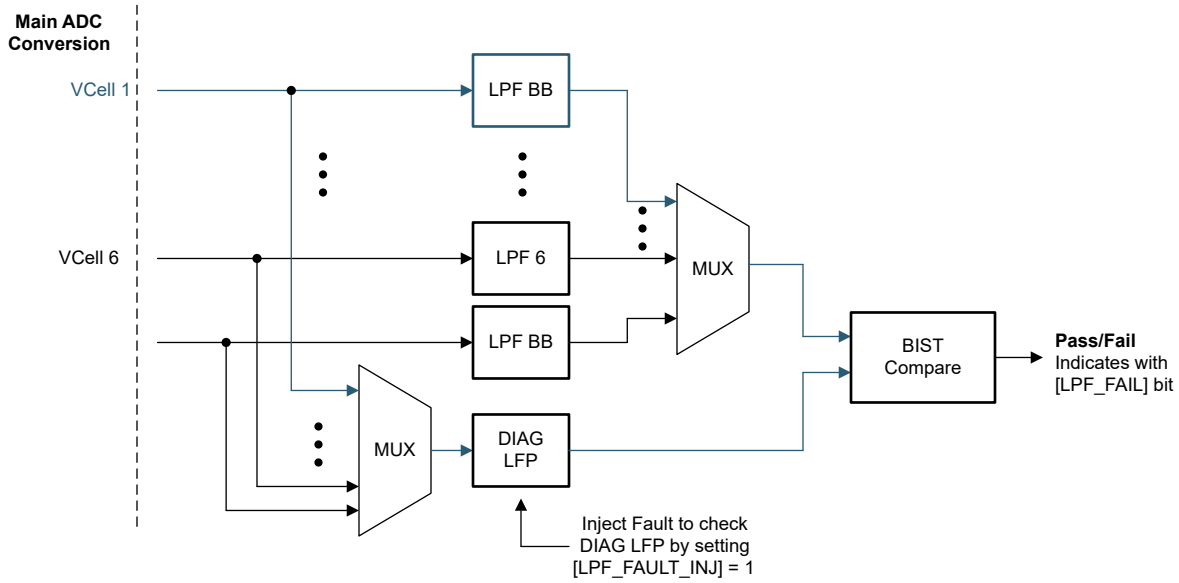

Figure 8-32. Post-ADC LPF Diagnostic (Blue Path as Example of Checking LPF1)

Furthermore, the device also implements a check to verify the functionality of the diagnostic LPF itself. By setting *DIAG_COMP_CTRL4[LPF_FAULT_INJ]* = 1 and restarting the Main ADC, the device will inject a fault into the diagnostic LPF, forcing a failure during the LPF diagnostic check which then sets the *[LPF_FAIL]* = 1. When the test is completed, simply set the *[LPF_FAULT_INJ]* = 0.

8.3.6.4.6.2 Temperature Measurement Check

Similar to the cell voltage measurement check, the device checks the thermistor temperature measurement by comparing the Main ADC measurement to the AUX ADC measurement. To read the compared value measured by Main ADC and AUX ADC, MCU has lock on a single channel using *[AUX_GPIO_SEL]* setting and the start this diagnostic check. In this configuration, the compared values from Main ADC and AUX ADC are reported to *DIAG_MAIN_HI/LO* registers and *DIAG_AUX_HI/LO* registers respectively.

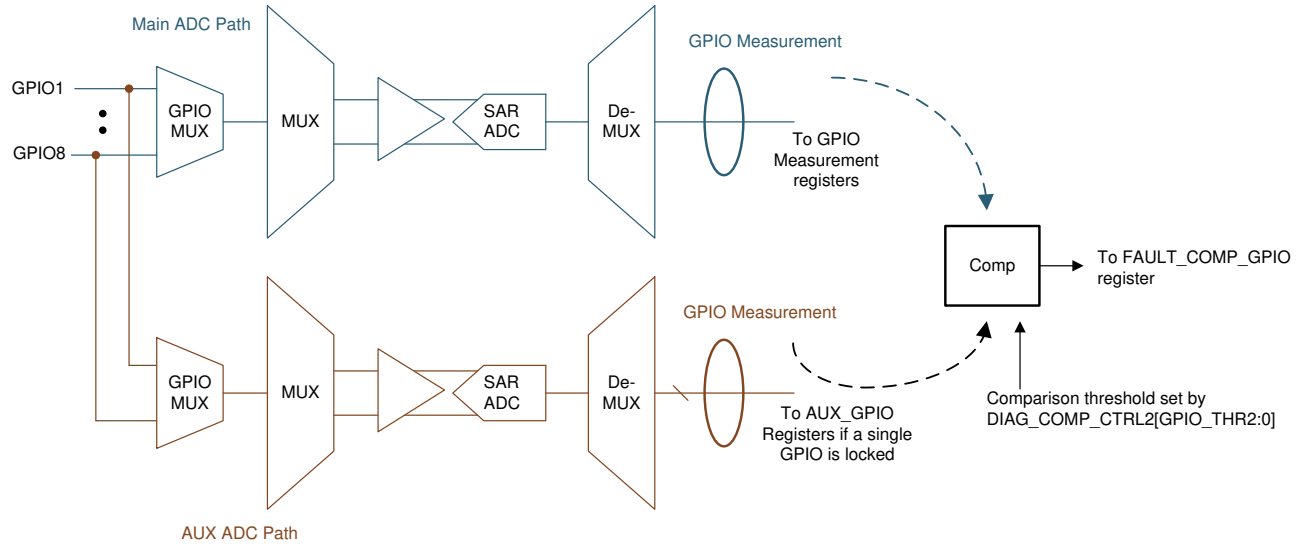

Figure 8-33. Thermistor Temperature (GPIO) Measurement Diagnostic

Before starting the temperature measurement comparison, host ensures:

- Main ADC must be enabled and is in continuous mode.

Copyright © 2023 Texas Instruments Incorporated

- The desired GPIO channels to be tested are configured in the *ADC_CTRL3[AUX_GPIO_SEL3:0]* setting and AUX ADC is enabled and in continuous mode.
- Select the comparison threshold through *DIAG_COMP_CTRL2[GPIO_THR2:0]* setting.

To start the temperature measurement comparison:

1. Set *DIAG_COMP_CTRL3[COMP_ADC_SEL2:0]* = GPIO measurement check (that is, 0b101) and set *[COMP_ADC_GO]* = 1.
2. For each channel enabled by *[AUX_GPIO_SEL4:0]*, the device will compare abs[(GPIO from Main – GPIO from AUX)] < *[GPIO_THR2:0]*.
3. Wait for the comparison to be accomplished which can take up to 64 ADC round robin times.
4. The GPIO measurement comparison is completed when *ADC_STAT2[DRDY_GPIO]* = 1.

Host checks the *FAULT_COMP_GPIO* register for the comparison result.

ADC comparison abort conditions:

The device will not start the temperature measurement comparison under the invalid conditions listed below. When the comparison is aborted, the *FAULT_COMP_MISC[COMP_ADC_ABORT]* = 1, *[DRDY_GPIO]* = 1, and *FAULT_COMP_GPIO* = 0xFF. If *[AUX_GPIO_SEL3:0]* is set to locked at a single channel, the *AUX_GPIO_HI/LO* registers will be reset to default value 0x8000 if the comparison run is aborted.

Invalid conditions or settings which will prevent the start of the temperature measurement comparison:

- Invalid *[AUX_GPIO_SEL]* setting which the selected GPIO isn't configured for ADC measurement. The *AUX_GPIO_HI/LO* registers are kept in default value. This also applies to the case if *[AUX_GPIO_SEL]* is selected for all GPIOs but none of the GPIOs are configured for ADC measurement.
- Main or AUX ADCs are off or not set in continuous mode.

8.3.6.4.6.3 Cell Balancing FETs Check

The cell balancing FET check is performed by turning on the balancing FET and comparing the voltage across the FET (through the AUX ADC path) versus the cell voltage (through the Main ADC path). To read the AUXCELL measurement used for the check, MCU has to set up this diagnostic check to lock on a single channel using *[AUX_CELL_SEL]* setting and the start this diagnostic check. The AUXCELL compared value will be reported to *DIAG_AUX_HI/LO* registers.

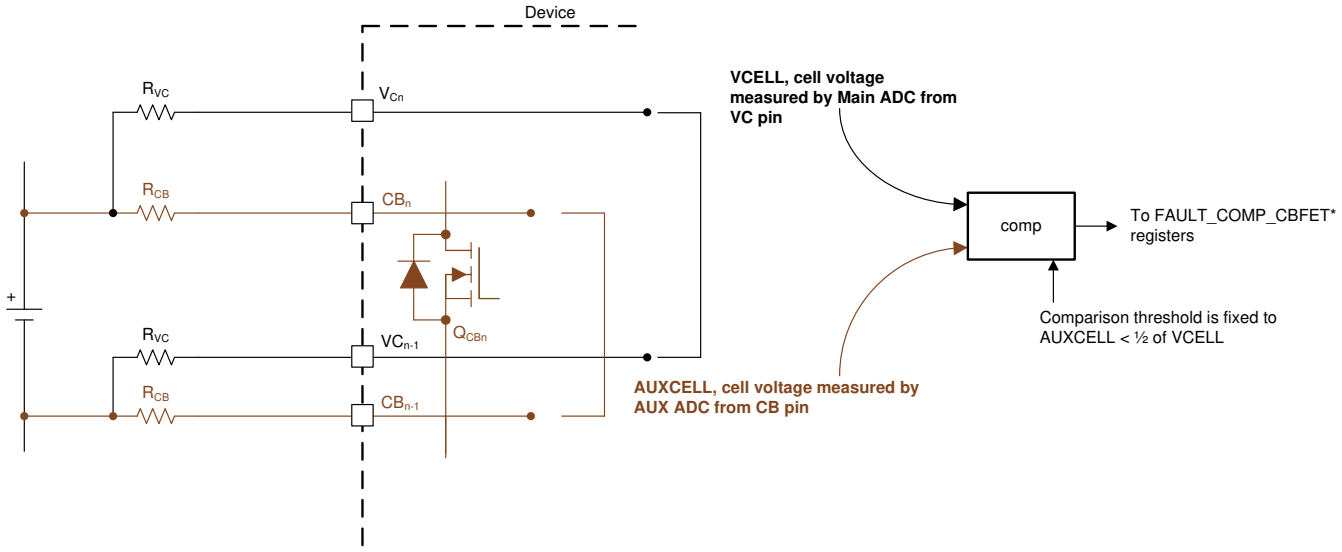

Figure 8-34. Cell Balancing FET Diagnostic

Before starting the cell balancing FET comparison, host ensures:

- Main ADC is running in continuous mode.

Copyright © 2023 Texas Instruments Incorporated

- Configured in the *ADC_CTRL2[AUX_CELL_SEL4:0]* to select the AUXCELL channels which the CB FETs are tested.
- Select the desired settling time for the AUX CELL channel through *ADC_CONF1[AUX_SETTLE1:0]*.
- Pause CB if balancing is running.
- Configured which CBFET to be tested through *DIAG_CBFET_CTRL2* register.
  - The rules of maximum of three CBFETs to be on and turn on no more than two consecutive CBFETs still apply.
  - Recommended to test in odd and even manner.

To start the CBFET comparison:

1. Start AUX ADC in continuous mode.
2. Turn on the selected CBFET by setting *DIAG_COMP_CTRL3[CBFET_CTRL_GO]* = 1 and wait for appropriate dv/dt time.
3. Set *DIAG_COMP_CTRL3[COMP_ADC_SEL2:0]* = CBFET check (that is, 0b100) and set *[COMP_ADC_GO]* = 1.
4. The device turns on the CBFET configured in the above step and compares the AUXCELL measurement (through CB channel) < half of the VCELL measurement (through VC channel). Only the CBFETs that are enabled are checked.
5. The CBFET comparison is completed when *ADC_STAT2[DRDY_CBFET]* = 1.
6. Repeat this procedure for other set of CBFET test. To turn off the CBFET enabled for this test, MCU clear the *DIAG_CBFET1* and *DIAG_CBFET2* registers then set the *[CBFET_CTRL_GO]* = 1. Otherwise, exiting from the CB pause state by sending *[CB_PAUSE]* = 0 will resume the regular balancing which turns off the CBFETs enabled for this test and resume on the CBFETs that are set for balancing.

Host checks the *FAULT_COMP_CBFET1* and *FAULT_COMP_CBFET2* registers for the comparison result. Repeat the steps to compare the remaining CBFETs.

ADC comparison abort conditions:

The device will not start the CBFET comparison under the invalid conditions listed below. When the comparison is aborted, the *FAULT_COMP_MISC[COMP_ADC_ABORT]* = 1, *[DRDY_AUX_CEL]* = 1, *[DRDY_CBFET]* = 1, and *FAULT_COMP_CBFET1/2* = 0xFF. If *[AUX_CELL_SEL4:0]* is set to locked at a single channel, the *AUX_CELL_HI/LO* registers will be reset to default value 0x8000 if the comparison run is aborted.

Invalid conditions or settings which will prevent the start of the cell voltage measurement comparison:

- Invalid *[AUX_CELL_SEL]* setting which results in no AUX ADC measurement on the selected channel. The *AUX_CELL_HI/LO* registers are kept in default value.
- Channel higher than the NUM_CELL configuration is selected.
- Main or AUX ADCs are off or not set in continuous mode.
- CB is running and it is not in pause mode.
- More than eight CBFETs are enabled, or more than two consecutive CBFETs are enabled in *DIAG_CBFET_CTRL1/2* registers.

8.3.6.4.6.4 VC and CB Open Wire Check

The device can detect an open wire connection on the VC and CB pins. A current sink is connected to each VC and CB pin, except VC0 and CB0 pins which are connected with a current source.

When the current sink (or current source) is enabled and if there is an open wire connection, the external differential capacitor will be depleted and the cell voltage measurement will drop to an abnormal level over time. Similar detection concept applies to the VC0 and CB0 pins with a current source. If there is an open wire connection, the VC0 or CB0 will be pulled up by the current source, resulting in a reduced cell voltage measurement over time.

When the diagnostic comparison is enabled, the device will compare the cell voltage measurement from Main ADC (for VC pins open wire detection) against a host-programmed threshold; or comparing the AUX CELL measurement from the AUX ADC (for CB pins open wire detection) against a host-programmed threshold.

Copyright © 2023 Texas Instruments Incorporated

If MCU lock to a single CB channel though *[AUX_CELL_SEL]* before starting the CB open wire check. The device will report the AUXCELL measurement used for the check comparison. The value is reported in *DIAG_AUX_HI/LO* registers. Since there is no single channel lock mechanism in Main ADC, VC channel measurement used for VC open wire will not be reported in *DIAG_MAIN_HI/LO* registers.

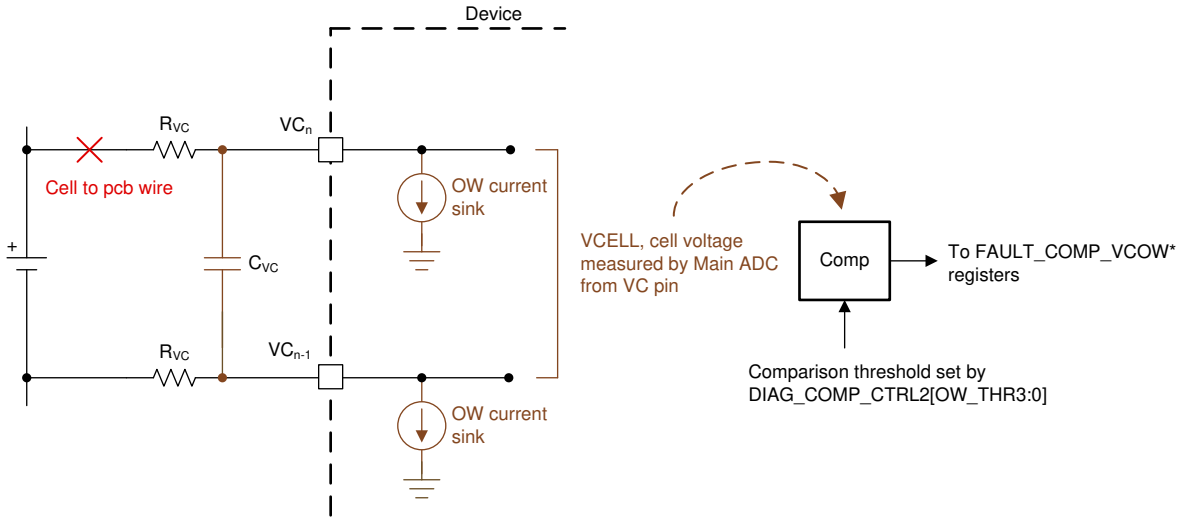

Figure 8-35. Open Wire Detection

Before starting the open wire comparison, host ensures:

- For VC open wire detection, Main ADC is running in continuous mode.
- For CB open wire detection, AUX ADC is running in continuous mode
  - Configured in the *ADC_CTRL2[AUX_CELL_SEL4:0]* to select the AUXCELL channels
  - Select the desired settling time for the AUX CELL channel through *ADC_CONF1[AUX_SETTLE1:0].*
- Configure the open wire detection threshold through *DIAG_COMP_CTRL2[OW_THR3:0]*.

To start the open wire comparison:

1. Turn on the VC pins (or CB pins) current sink or source through *DIAG_COMP_CTRL3[OW_SNK1:0]*.
2. Wait for dV/dt time of the external capacitor to deplete to the detection threshold if there is an open wire fault.
3. For VC open wire detection, select *DIAG_COMP_CTRL3[COMP_ADC_SEL2:0]* = OW VC check (that is, 0b010) and set *[COMP_ADC_GO]* = 1. Or for CB open wire detection, *[COMP_ADC_SEL2:0]* = OW CB check (that is, 0b011).
4. The device compares all active VCELL measurement (for VC open wire) or AUX CELL measurement (for CB open wire) against the *[OW_THR3:0]* threshold setting.
5. When the comparison is completed, *ADC_STAT2[DRDY_VCOW]* = 1 for VC open wire (or *[DRDY_CBOW]* = 1 for CB open wire).
6. Host then turns off all current sinks and sources through *DIAG_COMP_CTRL3[OW_SNK1:0]*.

Host checks the *FAULT_COMP_VCOW2* register or the *FAULT_COMP_CBOW2* register for the comparison result.

8.4 Device Functional Modes

The device has three power modes plus an POR state.

- POR: This is not a power mode. This is a condition in which the voltage at the BAT pin is less than VBAT min, and all circuits including the AVAO_REF block in the device are powered off.
- SHUTDOWN: This is the lowest power mode. AVDD, DVDD and CVDD supplies are off. Only a gross regulation at LDOIN pin is maintained. CVDD pin is will have a similar voltage as the LDOIN pin through internal circuit in order to support WAKE detection.
- SLEEP: This is the low power operation mode. Only limited functions are available.

Copyright © 2023 Texas Instruments Incorporated

- ACTIVE: This is the full power operation mode. All functions are supported under this state.

The various functions supported under different power modes are summarized in Table 8-26 and the power state diagram is shown in Figure 8-36.

Table 8-26. Active Functions Summary

Functional Block	SHUTDOWN	SLEEP	ACTIVE	POR
Main ADC and CS ADC			√	This is not a power state. All circuits are off. A sufficient voltage on VBAT will POR the device and put it to SHUTDOWN mode
AUX ADC			√	
OV/UV protector		√(1)	√	
OT/UT protector		√(1)	√	
Cell Balancing		√(1)	√	
OTCB Detection		√(1)	√	
UART			√	
Comm Vertical Communication			√	
Fault Status and NFAULT Communication		√	√	
Comm timeout			√	
SLEEP timeout		√		
Thermal Shutdown Detection		√	√	
SPI Controller			√	
OTP programming			√	
Always-on block to detect POR of the device	√	√	√	

(1) To enable cell balancing, OV/UV or OT/UT protector(s) in SLEEP mode, host must enable the function(s) in ACTIVE mode first, then put the device to SLEEP.

Copyright © 2023 Texas Instruments Incorporated

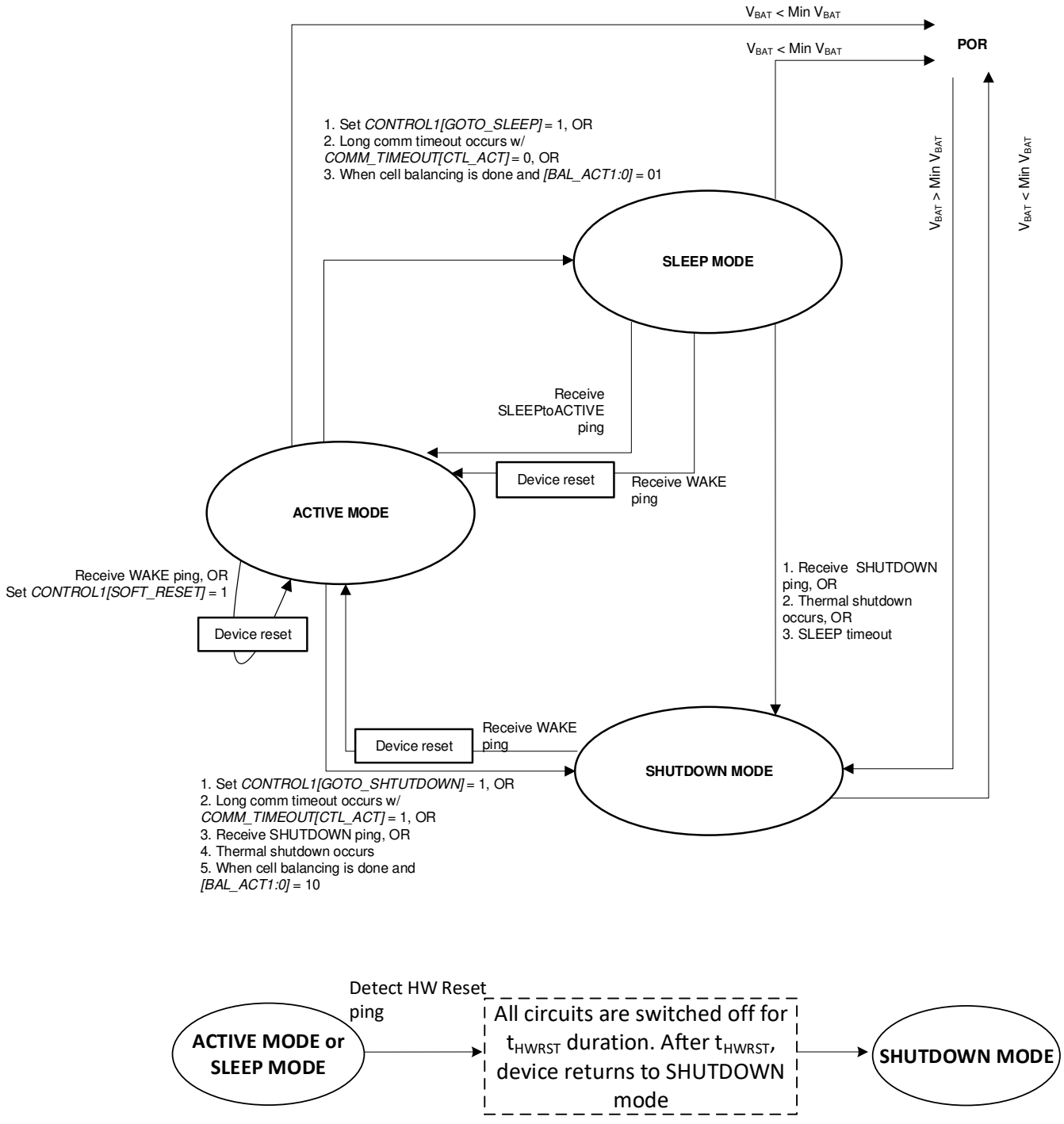

Figure 8-36. Power State Diagram

8.4.1 Power Modes

8.4.1.1 SHUTDOWN Mode

This is the lowest power mode. In SHUTDOWN mode, most of the functions are off. The device remains idle to simply monitor the WAKE ping (see Section 8.4.3 for details) to wake up from this state. Only a gross regulation on LDOIN and CVDD pins are maintain for WAKE ping detection.

Copyright © 2023 Texas Instruments Incorporated

8.4.1.1.1 Exit SHUTDOWN Mode

Communication is not supported in SHUTDOWN mode, host must send a WAKE ping to enter ACTIVE mode. Once device transitions from SHUTDOWN mode to ACTIVE mode, the following table indicates the expected fault bits being set under such transition has occurred.

Table 8-27. Expected Fault Bit After Device Wake From SHUTDOWN

Expected fault bits after waking up from SHUTDOWN	
FAULT_SYS[DRST] = 1	Digital reset by the wake ping
FAULT_COMM1[COMMCLR_DET] = *1*	UART engine is reset

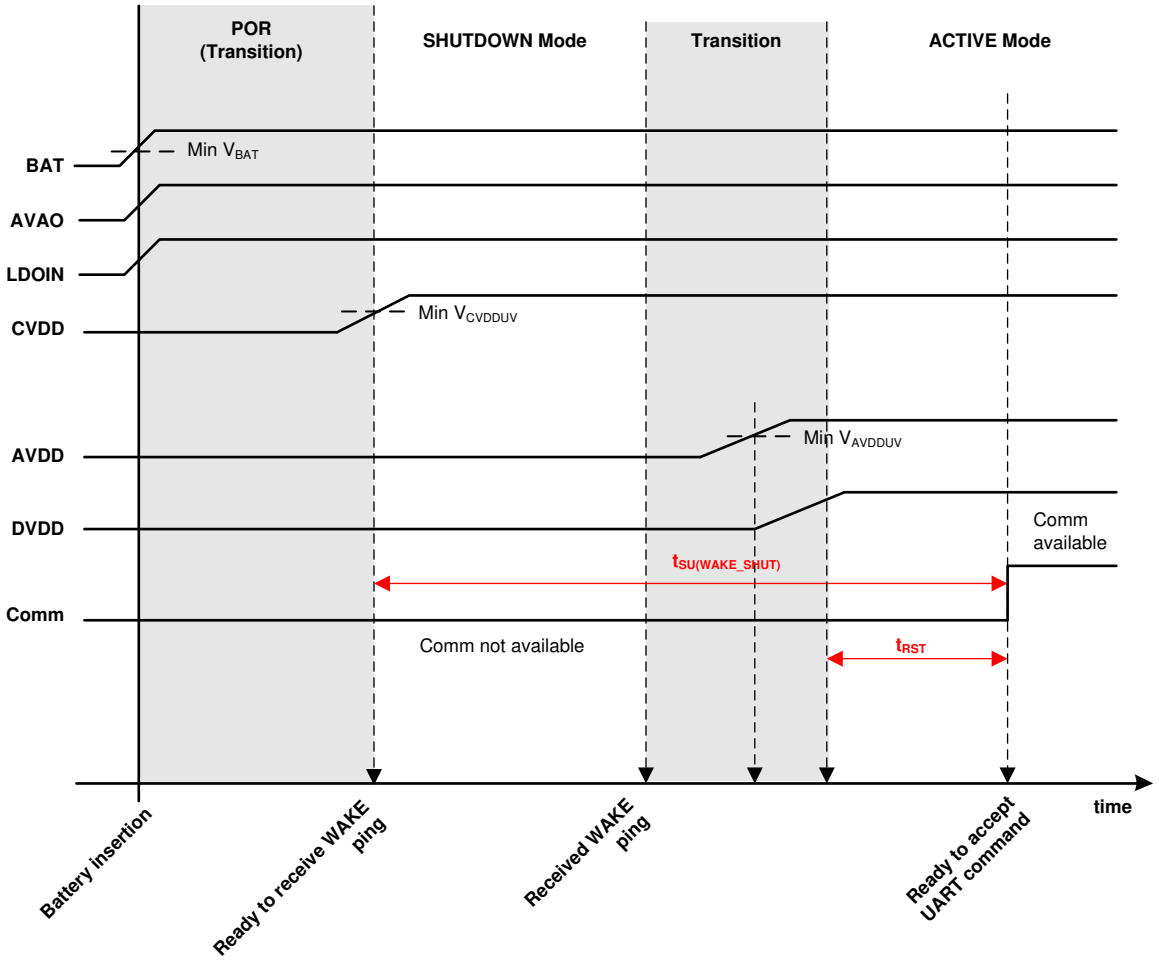

Figure 8-37. SHUTDOWN to ACTIVE Mode Transition

8.4.1.1.2 Enter SHUTDOWN Mode

During normal operation, host puts the device in SHUTDOWN mode through communication by sending *CONTROL1[GOTO_SHUTDOWN]* = 1.

The device can also enter SHUTDOWN mode by one of the following conditions:

- Communication timeout: automatically transitions from ACTIVE mode to SHUTDOWN mode if there is no valid communication for the configured time. Host can enable this option through the *COMM_TIMEOUT_CONF* register.
- SLEEP mode timeout: automatically transitions from SLEEP mode to SHUTDOWN mode if device is in SLEEP mode for the configured time. Host can enable this option through *PWR_TRANSIT_CONF[SLP_TIME2:0]*.

Copyright © 2023 Texas Instruments Incorporated

- Upon balancing completion: automatically enter SHUTDOWN mode when all balancing of the devices is completed. See Section 8.3.3 for details.
- Thermal shutdown: shuts down the device when the internal die temperature is greater than T_{SHUT}
- SHUTDOWN or HW_RESET ping: These pings are used as a recovery attempt on a loss communication situation. A SHUTDOWN ping puts the device into SHUTDOWN mode without using communication, forcing most of the circuits to be off. A more aggressive recovery attempt uses HW_RESET ping which turns off all circuits except a bandgap and restarts the device in SHUTDOWN mode.

8.4.1.2 SLEEP Mode

This is the low power operation mode. In SLEEP mode, all internal power supplies are still on, but functions are limited to cell balancing, OVUV and OTUT protectors.

8.4.1.2.1 Exit SLEEP Mode

Because host cannot communicate to the device, to exit SLEEP mode, host must send either a WAKE ping or SLEEPtoACTIVE ping to transition to ACTIVE mode. A WAKE wakes up and resets the device, which host will need to reconfigure the device setting; a SLEEPtoACTIVE only wakes up the device.

8.4.1.2.2 Enter SLEEP Mode

The device can enter SLEEP mode from ACTIVE mode only. During normal operation, host puts the device to SLEEP mode through communication by sending *CONTROL1[GOTO_SLEEP]* = 1.

The device can also enter SLEEP mode in the following condition:

- Communication timeout: automatically transitions from ACTIVE mode to SLEEP mode if there is no valid communication for the configured time. Host can enable this option through the *COMM_TIMEOUT_CONF* register.

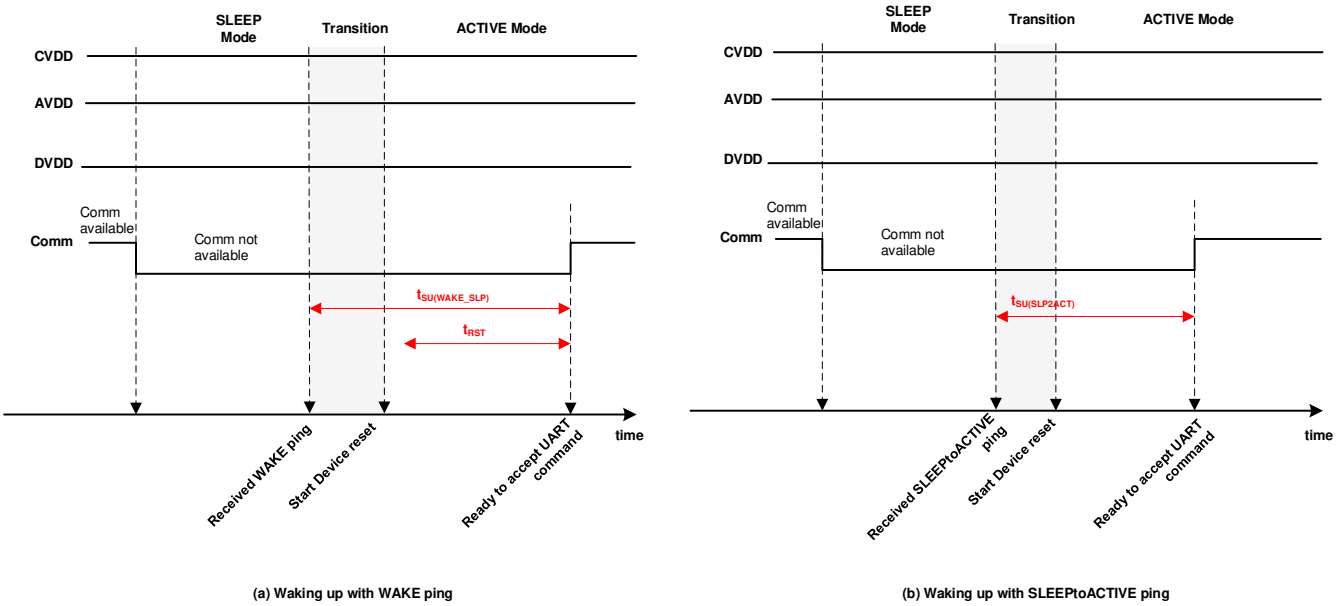

Figure 8-38. SLEEP to ACTIVE Mode Transition

8.4.1.3 ACTIVE Mode

This is the operation mode with full functionality support. Host can communicate to the device with full control on various features as well as performance diagnostic in this mode.

8.4.1.3.1 Exit ACTIVE Mode

From ACTIVE mode, device can enter SLEEP mode or SHUTDOWN mode through command, ping, timer, or specific event. See Section 8.4.1.1 and Section 8.4.1.2 for details.

Copyright © 2023 Texas Instruments Incorporated

8.4.1.3.2 Enter ACTIVE Mode From SHUTDOWN Mode

Device can transition to ACTIVE mode from SHUTDOWN mode only through a WAKE ping. Once in ACTIVE mode, host clears some of the reset-related faults which are expected faults (see Section 8.4.1.1 for details) indicating a POR on certain blocks due to the transition from SHUTDOWN mode to ACTIVE mode. Registers are reset to default; the OTP shadow registers are reloaded with the OTP programmed values.

8.4.1.3.3 Enter ACTIVE Mode From SLEEP Mode

From SLEEP mode, either a WAKE or SLEEPtoACTIVE ping can put the device in ACTIVE mode. A WAKE ping will generate a digital reset to the device. Because the LDO supplies remain on during SLEEP mode, only the *FAULT_SYS[DRST]* = 1 is set, indicating a digital reset has occurred. Certain expected faults related to being reset are set. See SHUTDOWN mode for detail. Registers are reset to default, the OTP shadow registers are reloaded with the OTP programmed values.

If a SLEEPtoACTIVE ping is used to wake up the device from SLEEP mode to ACTIVE mode, device will simply enter ACTIVE mode without digital resetting but the UART engine will be reset. Hence, in the device, the *FAULT_COMM1[COMMCLR_DET]* = 1 and host clears it after entering ACTIVE mode.

8.4.2 Device Reset

There are several conditions which the device will go through: a digital reset, putting the registers to their default settings and reloading the OTP.

- A WAKE ping is sent to transition from SHUTDOWN mode or SLEEP mode to ACTIVE mode.
- A WAKE ping is received in ACTIVE mode.
- The *CONTROL1[SOFT_RESET]* = 1 command is sent in ACTIVE mode.
- A HW_RESET ping is sent under any power mode. This generates a POR-like event to the device. Upon the detection of a HW_RESET ping, the device will turn off all internal blocks except a bandgap for t_{HWRST} duration. Afterward, the device will restart in SHUTDOWN mode.
- Internal power supply faults. See Section 8.3.6.4 for details.
  - AVDD UV, DVDD UV is detected.
- A HFO or LFP watchdog fault will reset the digital.

Apart from the full reset cases, the following conditions will only reset the UART engine. In the device, the *FAULT_COMM1[COMMCLR_DET]* = 1 will be set.

- A SLEEPtoACTIVE ping is sent to transition from SLEEP mode to ACTIVE mode.
- The following conditions not only clear the UART engine and set the *[COMMCLR_DET]* = 1, they also set *FAULT_COMM1[STOP_DET]* = 1 as an indication that an unexpected UART STOP is detected.
  - A SLEEPtoACTIVE ping is sent in ACTIVE mode.
  - A COMM CLEAR signal is sent. This is a dedicated signal to clear the UART engine and instruct the engine to look for a new start of communication frame. See Section 8.3.6.1.1.1 for more details.

8.4.3 Ping

In the noncommunicable conditions such as in SHUTDOWN or SLEEP mode, or in the loss of communication situations when host would like to instruct for a reset or power down as a communication recovery attempt, a Ping is used as a form of communication to the device for a specific action.

Table 8-28. Supported Ping in Different Power Modes

Ping Detection	Detected Pin(s)	SHUTDOWN	SLEEP	ACTIVE
SHUTDOWN ping	RX		√	√
SLEEPtoACTIVE ping	RX		√	√
WAKE ping	RX	√	√	√
HW_RESET ping	RX		√	√

Copyright © 2023 Texas Instruments Incorporated

8.4.3.1 Ping

A ping is a specific high-low-high signal to the RX pin of the device. The device detects different low times of the ping signal to differentiate the different ping signals.

The communication pings are referring to the WAKE ping, SLEEPtoACTIVE ping, SHUTDOWN ping, and HW_RESET ping. These pings instruct the device to a specific power mode when normal communication is not available. By definition, a COMM CLEAR signal on the RX pin is a form of a ping. Because a COMM_CLR is to clear the UART engine, this signal is covered in Section 8.3.6.1.1.1.

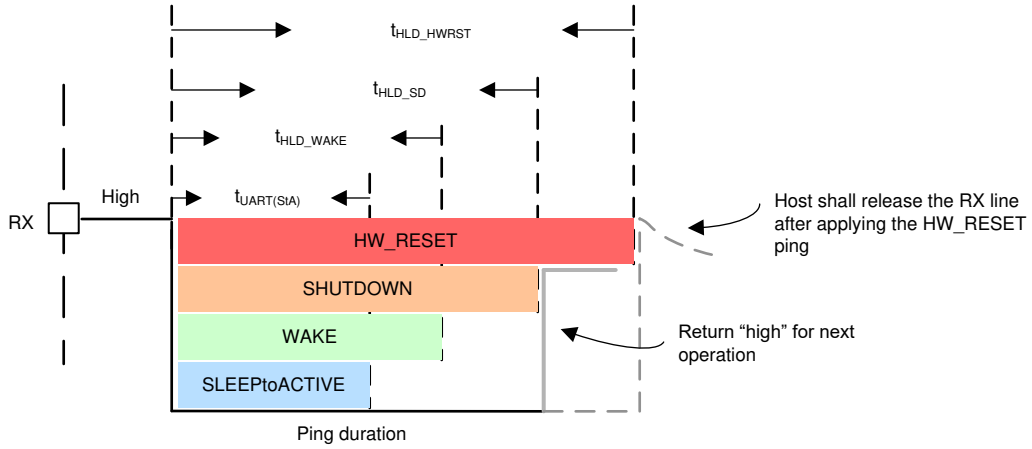

Figure 8-39. Communication Pings

8.5 Register Maps

This section has three register map summary tables with registers listed per the order of the register address:

- The NVM (OTP) shadow registers. These read/write-able shadow registers are reset with OTP values programmed in the customer OTP space. To program the custom OTP space, host writes the desired values to these OTP shadow registers and follows the programming procedure. These registers are included in the OTP CRC check. If customer OTP space is not programmed. The shadow registers are loaded with factory configuration default value. If the OTP (either factory configuration default or value programmed in customer OTP space) is failing to load after a device reset, the shadow registers will be loaded with the hardware reset default value instead. The hardware reset default value and the factory configuration default values are the same for the majority of the OTP shadow registers. Only the *DIR0_ADDR_OTP, DIR1_ADD_OTP*, *PWR_TRANSIT_CONF*, *CUST_CRC_HI/LO* registers have a reset value versus factory default, and are specified in Section 8.5.1 and their register field descriptions.
- The Read/Write registers. These are registers that the host can read/write to during runtime. A device reset will put these registers back to their reset value.
- The Read registers. These are registers that the host only has read access. A device reset will put these registers back to their reset value.

The register summary tables use the following key:

- Addr = Register address
- Hex = Hexidecimal value
- NVM = Non-volatile memory (OTP) shadow registers
- RSVD = Reserved. Reserved register addresses or bits are not implemented in the device. Any write to these bits is ignored. Reads to these bits always return 0.
- REG_INT_RSVD = Reserved register or bits for internal device usage. Host must have write to this register, other it may interrupt normal operation. Value display in this register shall be ignored.
- OTP_SPARE: These are spare OTP and shadow register bits that are implemented in the device. These spare bits are included as part of the CRC calculation. These bits are read/write as normal, but do not perform any function or influence any device behaviors.
- OTP_RSVDn = OTP and shadowed registers that are implemented but are reserved for device internal usage, where n refers to the register address. MCU must keep these registers in their default value
- HW Reset default is the value loaded when digital resets (POR like event) whereas Factory Configuration Default is the default value loaded into the OTP cell if customer doesn't program it themselves. Customer cannot read the HW Reset value.

Section 8.5.4 describes the definition of each bit in the registers. The registers in this section are grouped per functional blocks.

8.5.1 OTP Shadow Register Summary

Register Name	Addr Hex	RW Type	Reset Value	Data							
				Bit7	Bit6	Bit5	Bit4	Bit3	Bit2	Bit1	Bit0
DIR0_ADDR_OTP	0	NVM	HW Reset Default = 0x00 Factory Configuration Default = 0x01	SPARE[1:0]		ADDRESS[5:0]					
DIR1_ADDR_OTP	1	NVM	HW Reset Default = 0x00 Factory Configuration Default = 0x01	SPARE[1:0]		ADDRESS[5:0]					
DEV_CONF	2	NVM	0x54	RSVD	NO_ADJ_CB	RSVD	FCOMM_EN	TWO_STOP_EN	NFAULT_EN	FTONE_EN RSVD	RSVD

Copyright © 2023 Texas Instruments Incorporated

Register Name	Addr Hex	RW Type	Reset Value	Data							
				Bit7	Bit6	Bit5	Bit4	Bit3	Bit2	Bit1	Bit0
ACTIVE_CELL	3	NVM	HW Reset Default = 0x00 Factory Configuration Default = 0x00	SPARE[3:0]				NUM_CELL[3:0]			
OTP_SPARE15	4	NVM	0x00	SPARE[7:0]							
OTP_RSVD5	5	NVM	0x00	INTERNAL USE. DO NOT WRITE TO THIS ADDRESS							
OTP_RSVD6	6	NVM	0x00	INTERNAL USE. DO NOT WRITE TO THIS ADDRESS							
ADC_CONF1	7	NVM	0x00	AUX_SETTLE[1:0]		LPF_SR[2:0]			LPF_VCELL[2:0]		
ADC_CONF2	8	NVM	0x00	SPARE[1:0]		ADC_DLY[5:0]					
OV_THRESH	9	NVM	0x3F	SPARE	SPARE	OV_THR[5:0]					
UV_THRESH	A	NVM	0x00	SPARE	SPARE	UV_THR[5:0]					
OTUT_THRESH	B	NVM	0xE0	UT_THR[2:0]			OT_THR[4:0]				
RSVD	C	NVM	0x00	RSVD	RSVD	RSVD	RSVD	RSVD	RSVD	RSVD	RSVD
UV_DISABLE2	D	NVM	0x00	RSVD	RSVD	CELL6	CELL5	CELL4	CELL3	CELL2	CELL1
GPIO_CONF1	E	NVM	0x00	FAULT_IN_EN	SPI_EN	GPIO2[2:0]			GPIO1[2:0]		
GPIO_CONF2	F	NVM	0x00	SPARE	CS_DRDY	GPIO4[2:0]			GPIO3[2:0]		
GPIO_CONF3	10	NVM	0x00	SPARE[1:0]		GPIO6[2:0]			GPIO5[2:0]		
GPIO_CONF4	11	NVM	0x00	SPARE[1:0]		GPIO8[2:0]			GPIO7[2:0]		
OTP_SPARE14	12	NVM	0x00	SPARE[7:0]							
OTP_SPARE13	13	NVM	0x00	SPARE[7:0]							
OTP_SPARE12	14	NVM	0x00	SPARE[7:0]							
OTP_SPARE11	15	NVM	0x00	SPARE[7:0]							
FAULT_MSK1	16	NVM	0x00	MSK_ PROT	MSK_UT	MSK_OT	MSK_UV	MSK_OV	MSK_ COMP	MSK_ SYS	MSK_ PWR
FAULT_MSK2	17	NVM	0x00	SPARE[1]	MSK_ OTP_ CRC	MSK_ OTP_ DATA	SPARE	SPARE	SPARE	SPARE	MSK_ COMM1
PWR_TRANSIT_CONF	18	NVM	HW Reset Default = 0x18 Factory Configuration Default = 0x10	SPARE[2:0]			TWARN_THR[1:0]		SLP_TIME[2:0]		

Copyright © 2023 Texas Instruments Incorporated

Register Name	Addr Hex	RW Type	Reset Value	Data							
				Bit7	Bit6	Bit5	Bit4	Bit3	Bit2	Bit1	Bit0
COMM_TIMEOUT_CONF	19	NVM	0x00	SPARE	CTS_TIME[2:0]			CTL_ ACT	CTL_TIME[2:0]		
TX_HOLD_OFF	1A	NVM	0x00	DLY[7:0]							
MAIN_ADC_CAL1	1B	NVM	0x00	GAINL[7:0]							
MAIN_ADC_CAL2	1C	NVM	0x00	GAINH	OFFSET[6:0]						
AUX_ADC_CAL1	1D	NVM	0x00	GAINL[7:0]							
AUX_ADC_CAL2	1E	NVM	0x00	GAINH	OFFSET[6:0]						
CS_ADC_CAL1	1F	NVM	0x00	GAINL[7:0]							
CS_ADC_CAL2	20	NVM	0x00	GAINH[2:0]			OFFSET[4:0]				
CUST_MISC1 through CUST_MISC8	21	NVM	0x00	DATA[7:0]							
	22	NVM	0x00	DATA[7:0]							
	23	NVM	0x00	DATA[7:0]							
	24	NVM	0x00	DATA[7:0]							
	25	NVM	0x00	DATA[7:0]							
	26	NVM	0x00	DATA[7:0]							
	27	NVM	0x00	DATA[7:0]							
	28	NVM	0x00	DATA[7:0]							
OTP_RSVD29	29	NVM	0x00	INTERNAL USE. DO NOT WRITE TO THIS ADDRESS							
OTP_RSVD2A	2A	NVM	0x00	INTERNAL USE. DO NOT WRITE TO THIS ADDRESS							
OTP_RSVD2B	2B	NVM	0x00	INTERNAL USE. DO NOT WRITE TO THIS ADDRESS							
OTP_SPARE10	2C	NVM	0x00	SPARE[7:0]							
OTP_SPARE9	2D	NVM	0x00	SPARE[7:0]							
OTP_SPARE8	2E	NVM	0x00	SPARE[7:0]							
OTP_SPARE7	2F	NVM	0x00	SPARE[7:0]							
OTP_SPARE6	30	NVM	0x00	SPARE[7:0]							
OTP_SPARE5	31	NVM	0x00	SPARE[7:0]							
OTP_SPARE4	32	NVM	0x00	SPARE[7:0]							
OTP_SPARE3	33	NVM	0x00	SPARE[7:0]							
OTP_SPARE2	34	NVM	0x00	SPARE[7:0]							
OTP_SPARE1	35	NVM	0x00	SPARE[7:0]							

Copyright © 2023 Texas Instruments Incorporated

Register Name	Addr Hex	RW Type	Reset Value	Data							
				Bit7	Bit6	Bit5	Bit4	Bit3	Bit2	Bit1	Bit0
CUST_CRC_HI	36	NVM	HW Reset Default = 0x57 Factory Configuration Default = 0x31	CRC[7:0]							
CUST_CRC_LO	37	NVM	HW Reset Default = 0x89 Factory Configuration Default = 0xF3	CRC[7:0]							

Copyright © 2023 Texas Instruments Incorporated

8.5.2 Read/Write Register Summary

Register Name	Addr Hex	RW Type	Reset Value	Data							
				Bit7	Bit6	Bit5	Bit4	Bit3	Bit2	Bit1	Bit0
OTP_PROG_UNLOCK1A through OTP_PROG_UNLOCK1D	300	RW	0x00	CODE[7:0]							
	301	RW	0x00	CODE[7:0]							
	302	RW	0x00	CODE[7:0]							
	303	RW	0x00	CODE[7:0]							
DIR0_ADDR	306	RW	0x00	RSVD		ADDRESS[5:0]					
DIR1_ADDR	307	RW	0x00	RSVD		ADDRESS[5:0]					
COMM_CTRL	308	RW	0x00	RSVD						STACK_DEV RSVD	TOP_STACK RSVD
CONTROL1	309	RW	0x00	DIR_SEL	SEND_SHUTDOWN	SEND_WAKE	SEND_SLPTOACT	GOTO_SHUTDOWN	GOTO_SLEEP	SOFT_RESET	RSVD
CONTROL2	30A	RW	0x00	RSVD						RSVD	TSREF_EN
OTP_PROG_CTRL	30B	RW	0x00	RSVD						PAGE SEL	PROG_GO
ADC_CTRL1	30D	RW	0x00	RSVD	CS_DR[1:0]		LPF_SR_EN	LPF_VCELL_EN	CS_MAIN_GO	CS_MAIN_MODE[1:0]	
ADC_CTRL2	30E	RW	0x00	RSVD		AUX_CELL_ALIGN	AUX_CELL_SEL[4:0]				
ADC_CTRL3	30F	RW	0x00	RSVD	AUX_GPIO_SEL[3:0]				AUX_GO	AUX_MODE[1:0]	
REG_INT_RSVD	310	RW	0x00	INTERNAL USE. DO NOT WRITE TO THIS ADDRESS							
CB_CELL6_CTRL through CB_CELL1_CTRL	322	RW	0x00	RSVD			TIME[4:0]				
	323	RW	0x00	RSVD			TIME[4:0]				
	324	RW	0x00	RSVD			TIME[4:0]				
	325	RW	0x00	RSVD			TIME[4:0]				
	326	RW	0x00	RSVD			TIME[4:0]				
	327	RW	0x00	RSVD			TIME[4:0]				
VCB_DONE_THRESH	32A	RW	0x00	RSVD		CB_THR[5:0]					
OTCB_THRESH	32B	RW	0x0F	RSVD	COOLOFF[2:0]			OTCB_THR[3:0]			
OVUV_CTRL	32C	RW	0x00	VCB DONE_THR_LOCK	OVUV_LOCK[3:0]				OVUV_GO	OVUV_MODE[1:0]	
OTUT_CTRL	32D	RW	0x00	RSVD	OTCB_THR_LOCK	OTUT_LOCK[2:0]			OTUT_GO	OTUT_MODE[1:0]	
BAL_CTRL1	32E	RW	0x00	RSVD					DUTY[2:0]		
BAL_CTRL2	32F	RW	0x00	RSVD	CB_PAUSE	FLTSTOP_EN	OTCB_EN	BAL_ACT[1:0]		BAL_GO	AUTO_BAL
BAL_CTRL3	330	RW	0x00	RSVD			BAL_TIME_SEL[3:0]				BAL_TIME_GO
FAULT_RST1	331	RW	0x00	RST_PROT	RST_UT	RST_OT	RST_UV	RST_OV	RST_COMP	RST_SYS	RST_PWR
FAULT_RST2	332	RW	0x00	RSVD	RST_OTP_CRC	RST_OTP_DATA	REG_INT_RSVD	REG_INT_RSVD	REG_INT_RSVD	REG_INT_RSVD	RST_COMM1

Copyright © 2023 Texas Instruments Incorporated

Register Name	Addr Hex	RW Type	Reset Value	Data							
				Bit7	Bit6	Bit5	Bit4	Bit3	Bit2	Bit1	Bit0
DIAG_OTP_CTRL	335	RW	0x00	RSVD			FLIP_FACT_CRC	MARGIN_MODE[2:0]			MARGIN_GO
DIAG_COMM_CTRL	336	RW	0x00	RSVD						SPI_LOOPBACK	FLIP_TR_CRC
DIAG_PWR_CTRL	337	RW	0x00	RSVD						BIST_NO_RST	PWR_BIST_GO
RSVD	338	RW	0x00	RSVD	RSVD	RSVD	RSVD	RSVD	RSVD	RSVD	RSVD
DIAG_CBFET_CTRL2	339	RW	0x00	RSVD	RSVD	CBFET6	CBFET5	CBFET4	CBFET3	CBFET2	CBFET1
DIAG_COMP_CTRL1	33A	RW	0x00	VCCB_THR[4:0]					REG_INT_RSVD		
DIAG_COMP_CTRL2	33B	RW	0x00	RSVD	GPIO_THR[2:0]			OW_THR[3:0]			
DIAG_COMP_CTRL3	33C	RW	0x00	RSVD	CBFET_CTRL_GO	OW_SNK[1:0]		COMP_ADC_SEL[2:0]			COMP_ADC_GO
DIAG_COMP_CTRL4	33D	RW	0x00	RSVD						COMP_FAULT_INJ	LPF_FAULT_INJ
DIAG_PROT_CTRL	33E	RW	0x00	RSVD							PROT_BIST_NO_RST
OTP_ECC_DATAIN1 through OTP_ECC_DATAIN9	343	RW	0x00	DATA[7:0]							
	344	RW	0x00	DATA[7:0]							
	345	RW	0x00	DATA[7:0]							
	346	RW	0x00	DATA[7:0]							
	347	RW	0x00	DATA[7:0]							
	348	RW	0x00	DATA[7:0]							
	349	RW	0x00	DATA[7:0]							
	34A	RW	0x00	DATA[7:0]							
	34B	RW	0x00	DATA[7:0]							
OTP_ECC_TEST	34C	RW	0x00	RSVD				DED_SEC	MANUAL_AUTO	ENC_DEC	ENABLE
SPI_CONF	34D	RW	0x00	RSVD	CPOL	CPHA	NUMBIT[4:0]				
SPI_TX3, SPI_TX2, and SPI_TX1	34E	RW	0x00	DATA[7:0]							
	34F	RW	0x00	DATA[7:0]							
	350	RW	0x00	DATA[7:0]							
SPI_EXE	351	RW	0x02	RSVD						SS_CTRL	SPI_GO
OTP_PROG_UNLOCK2A through OTP_PROG_UNLOCK2D	352	RW	0x00	CODE[7:0]							
	353	RW	0x00	CODE[7:0]							
	354	RW	0x00	CODE[7:0]							
	355	RW	0x00	CODE[7:0]							
REG_INT_RSVD	700	RW	0x00	INTERNAL USE. DO NOT WRITE TO THIS ADDRESS							
REG_INT_RSVD	701	RW	0x00	INTERNAL USE. DO NOT WRITE TO THIS ADDRESS							
REG_INT_RSVD	702	RW	0x00	INTERNAL USE. DO NOT WRITE TO THIS ADDRESS							

Copyright © 2023 Texas Instruments Incorporated

8.5.3 Read-Only Register Summary

Register Name	Addr Hex	RW Type	Reset Value	Data							
				Bit7	Bit6	Bit5	Bit4	Bit3	Bit2	Bit1	Bit0
PARTID	500	R	0x00	REV[7:0]							
DEV_REVID	E00	R	0x00	DEV_REVID[7:0]							
DIE_ID1 through DIE_ID9	501	R	0x00	ID[7:0]							
	502	R	0x00	ID[7:0]							
	503	R	0x00	ID[7:0]							
	504	R	0x00	ID[7:0]							
	505	R	0x00	ID[7:0]							
	506	R	0x00	ID[7:0]							
	507	R	0x00	ID[7:0]							
	508	R	0x00	ID[7:0]							
	509	R	0x00	ID[7:0]							
CUST_CRC_RSLT_HI	50C	R	0x31	CRC[7:0]							
CUST_CRC_RSLT_LO	50D	R	0xF3	CRC[7:0]							
OTP_ECC_DATAOUT1 through OTP_ECC_DATAOUT9	510	R	0x00	DATA[7:0]							
	511	R	0x00	DATA[7:0]							
	512	R	0x00	DATA[7:0]							
	513	R	0x00	DATA[7:0]							
	514	R	0x00	DATA[7:0]							
	515	R	0x00	DATA[7:0]							
	516	R	0x00	DATA[7:0]							
	517	R	0x00	DATA[7:0]							
	518	R	0x00	DATA[7:0]							
OTP_PROG_STAT	519	R	0x00	UNLOCK	OTERR	UVERR	OVERR	SUVERR	SOVERR	PROG ERR	DONE
OTP_CUST1_STAT	51A	R	0x00	LOADED	LOAD WRN	LOAD ERR	FMTERR	PROGOK	UVOK	OVOK	TRY
OTP_CUST2_STAT	51B	R	0x00	LOADED	LOAD WRN	LOAD ERR	FMTERR	PROGOK	UVOK	OVOK	TRY
SPI_RX3, SPI_RX2, and SPI_RX1	520	R	0x00	DATA[7:0]							
	521	R	0x00	DATA[7:0]							
	522	R	0x00	DATA[7:0]							
DIAG_STAT	526	R	0x00	RSVD			DRDY_OTUT	DRDY_OVUV	DRDY_BIST_OTUT	DRDY_BIST_OVUV	DRDY_BIST_PWR
ADC_STAT1	527	R	0x00	RSVD			DRDY_CS_ADC	DRDY_AUX_GPIO	DRDY_AUX_CELL	DRDY_AUX_MISC	DRDY_MAIN_ADC
ADC_STAT2	528	R	0x00	RSVD		DRDY_LPF	DRDY_GPIO	DRDY_VCOW	DRDY_CBOW	DRDY_CBFET	DRDY_VCCB
GPIO_STAT	52A	R	0x00	GPIO8	GPIO7	GPIO6	GPIO5	GPIO4	GPIO3	GPIO2	GPIO1
BAL_STAT	52B	R	0x00	INVALID_CBCONF	OT_PAUSE_DET	CB_INPAUSE	MB_RUN	CB_RUN	ABORT FLT	MB_DONE	CB_DONE
DEV_STAT	52C	R	0x00	RSVD	FACT_CRC_DONE	CUST_CRC_DONE	OTUT_RUN	OVUV_RUN	CS_RUN	AUX_RUN	MAIN_RUN

Copyright © 2023 Texas Instruments Incorporated

Register Name	Addr Hex	RW Type	Reset Value	Data							
				Bit7	Bit6	Bit5	Bit4	Bit3	Bit2	Bit1	Bit0
FAULT_SUMMARY	52D	R	0x00	FAULT_PROT	FAULT_COMP_ADC	FAULT_OTP	FAULT_COMM	FAULT_OTUT	FAULT_OVUV	FAULT_SYS	FAULT_PWR
FAULT_COMM1	530	R	0x00	RSVD			UART_TR	UART_RR	UART_RC	COMM CLR_DET	STOP_DET
FAULT_OTP	535	R	0x00	RSVD	DED_DET	SEC_DET	CUST_CRC	FACT_CRC	CUSTLD ERR	FACTLD ERR	GBLOV ERR
FAULT_SYS	536	R	0x00	LFO	RSVD	GPIO	DRST	CTL	CTS	TSHUT	TWARN
FAULT_PROT1	53A	R	0x00	RSVD						TPARITY_FAIL	VPARITY_FAIL
FAULT_PROT2	53B	R	0x00	RSVD	BIST_ABORT	TPATH_FAIL	VPATH_FAIL	UTCOMP_FAIL	OTCOMP_FAIL	OVCOMP_FAIL	UVCOMP_FAIL
RSVD	53C	R	0x00	RSVD	RSVD	RSVD	RSVD	RSVD	RSVD	RSVD	RSVD
FAULT_OV2	53D	R	0x00	RSVD	RSVD	OV6_DET	OV5_DET	OV4_DET	OV3_DET	OV2_DET	OV1_DET
RSVD	53E	R	0x00	RSVD	RSVD	RSVD	RSVD	RSVD	RSVD	RSVD	RSVD
FAULT_UV2	53F	R	0x00	RSVD	RSVD	UV6_DET	UV5_DET	UV4_DET	UV3_DET	UV2_DET	UV1_DET
FAULT_OT	540	R	0x00	OT8_DET	OT7_DET	OT6_DET	OT5_DET	OT4_DET	OT3_DET	OT2_DET	OT1_DET
FAULT_UT	541	R	0x00	UT8_DET	UT7_DET	UT6_DET	UT5_DET	UT4_DET	UT3_DET	UT2_DET	UT1_DET
FAULT_COMP_GPIO	543	R	0x00	GPIO8_FAIL	GPIO7_FAIL	GPIO6_FAIL	GPIO5_FAIL	GPIO4_FAIL	GPIO3_FAIL	GPIO2_FAIL	GPIO1_FAIL
RVSD	545	R	0x00	RSVD	RSVD	RSVD	RSVD	RSVD	RSVD	RSVD	RSVD
FAULT_COMP_VCCB2	546	R	0x00	RSVD	RSVD	CELL6_FAIL	CELL5_FAIL	CELL4_FAIL	CELL3_FAIL	CELL2_FAIL	CELL1_FAIL
RSVD	548	R	0x00	RSVD	RSVD	RSVD	RSVD	RSVD	RSVD	RSVD	RSVD
FAULT_COMP_VCOW2	549	R	0x00	RSVD	RSVD	VCOW6_FAIL	VCOW5_FAIL	VCOW4_FAIL	VCOW3_FAIL	VCOW2_FAIL	VCOW1_FAIL
RSVD	54B	R	0x00	RSVD	RSVD	RSVD	RSVD	RSVD	RSVD	RSVD	RSVD
FAULT_COMP_VBOW2	54C	R	0x00	RSVD	RSVD	CBOW6_FAIL	CBOW5_FAIL	CBOW4_FAIL	CBOW3_FAIL	CBOW2_FAIL	CBOW1_FAIL
RSVD	54E	R	0x00	RSVD	RSVD	RSVD	RSVD	RSVD	RSVD	RSVD	RSVD
FAULT_COMP_CBFET2	54F	R	0x00	RSVD	RSVD	CBFET6_FAIL	CBFET5_FAIL	CBFET4_FAIL	CBFET3_FAIL	CBFET2_FAIL	CBFET1_FAIL
FAULT_COMP_MISC	550	R	0x00	RSVD						COMP_ADC_ABORT	LPF_FAIL
FAULT_PWR1	552	R	0x00	CVSS_OPEN	DVSS_OPEN	REFHM_OPEN	CVDD_UV	CVDD_OV	DVDD_OV	AVDD_OSC	AVDD_OV
FAULT_PWR2	553	R	0x00	RSVD	PWRBIST_FAIL	RSVD	REFH_OSC	NEG5V_UV	TSREF_OSC	TSREF_UV	TSREF_OV
FAULT_PWR3	554	R	RSVD	RSVD					RSVD	RSVD	AVDDUV_DRST
RSVD	556	R	0x00	RSVD	RSVD	RSVD	RSVD	RSVD	RSVD	RSVD	RSVD
CB_COMPLETE2	557	R	0x00	RSVD	RSVD	CELL6_DONE	CELL5_DONE	CELL4_DONE	CELL3_DONE	CELL2_DONE	CELL1_DONE
BAL_TIME	558	R	0x00	TIME_UNIT	TIME[6:0]						
RSVD	568	R	0x80	RSVD							
	569	R	0x00	RSVD							
RSVD	56A	R	0x80	RSVD							
	56B	R	0x00	RSVD							

Copyright © 2023 Texas Instruments Incorporated

Register Name	Addr Hex	RW Type	Reset Value	Data							
				Bit7	Bit6	Bit5	Bit4	Bit3	Bit2	Bit1	Bit0
RSVD	56C	R	0x80	RSVD							
	56D	R	0x00	RSVD							
RSVD	56E	R	0x80	RSVD							
	56F	R	0x00	RSVD							
RSVD	570	R	0x80	RSVD							
	571	R	0x00	RSVD							
RSVD	572	R	0x80	RSVD							
	573	R	0x00	RSVD							
RSVD	574	R	0x80	RSVD							
	575	R	0x00	RSVD							
RSVD	576	R	0x80	RSVD							
	577	R	0x00	RSVD							
RSVD	578	R	0x80	RSVD							
	579	R	0x00	RSVD							
RSVD	57A	R	0x80	RSVD							
	57B	R	0x00	RSVD							
VCELL6_HI/LO	57C	R	0x80	RESULT[7:0]							
	57D	R	0x00	RESULT[7:0]							
VCELL5_HI/LO	57E	R	0x80	RESULT[7:0]							
	57F	R	0x00	RESULT[7:0]							
VCELL4_HI/LO	580	R	0x80	RESULT[7:0]							
	581	R	0x00	RESULT[7:0]							
VCELL3_HI/LO	582	R	0x80	RESULT[7:0]							
	583	R	0x00	RESULT[7:0]							
VCELL2_HI/LO	584	R	0x80	RESULT[7:0]							
	585	R	0x00	RESULT[7:0]							
VCELL1_HI/LO	586	R	0x80	RESULT[7:0]							
	587	R	0x00	RESULT[7:0]							
MAIN_CURRENT_HI/LO	588	R	0x80	RESULT[7:0]							
	589	R	0x00	RESULT[7:0]							
TSREF_HI/LO	58C	R	0x80	RESULT[7:0]							
	58D	R	0x00	RESULT[7:0]							
GPIO1_HI/LO	58E	R	0x80	RESULT[7:0]							
	58F	R	0x00	RESULT[7:0]							
GPIO2_HI/LO	590	R	0x80	RESULT[7:0]							
	591	R	0x00	RESULT[7:0]							
GPIO3_HI/LO	592	R	0x80	RESULT[7:0]							
	593	R	0x00	RESULT[7:0]							
GPIO4_HI/LO	594	R	0x80	RESULT[7:0]							
	595	R	0x00	RESULT[7:0]							
GPIO5_HI/LO	596	R	0x80	RESULT[7:0]							
	597	R	0x00	RESULT[7:0]							
GPIO6_HI/LO	598	R	0x80	RESULT[7:0]							
	599	R	0x00	RESULT[7:0]							

Copyright © 2023 Texas Instruments Incorporated

Register Name	Addr Hex	RW Type	Reset Value	Data							
				Bit7	Bit6	Bit5	Bit4	Bit3	Bit2	Bit1	Bit0
GPIO7_HI/LO	59A	R	0x80	RESULT[7:0]							
	59B	R	0x00	RESULT[7:0]							
GPIO8_HI/LO	59C	R	0x80	RESULT[7:0]							
	59D	R	0x00	RESULT[7:0]							
DIETEMP1_HI/LO	5AE	R	0x80	RESULT[7:0]							
	5AF	R	0x00	RESULT[7:0]							
DIETEMP2_HI/LO	5B0	R	0x80	RESULT[7:0]							
	5B1	R	0x00	RESULT[7:0]							
AUX_CELL_HI/LO	5B2	R	0x80	RESULT[7:0]							
	5B3	R	0x00	RESULT[7:0]							
AUX_GPIO_HI/LO	5B4	R	0x80	RESULT[7:0]							
	5B5	R	0x00	RESULT[7:0]							
AUX_BAT_HI/LO	5B6	R	0x80	RESULT[7:0]							
	5B7	R	0x00	RESULT[7:0]							
AUX_REFL_HI/LO	5B8	R	0x80	RESULT[7:0]							
	5B9	R	0x00	RESULT[7:0]							
AUX_VBG2_HI/LO	5BA	R	0x80	RESULT[7:0]							
	5BB	R	0x00	RESULT[7:0]							
AUX_AVAO_REF_HI/LO	5BE	R	0x80	RESULT[7:0]							
	5BF	R	0x00	RESULT[7:0]							
AUX_AVDD_REF_HI/LO	5C0	R	0x80	RESULT[7:0]							
	5C1	R	0x00	RESULT[7:0]							
AUX_OV_DAC_HI/LO	5C2	R	0x80	RESULT[7:0]							
	5C3	R	0x00	RESULT[7:0]							
AUX_UV_DAC_HI/LO	5C4	R	0x80	RESULT[7:0]							
	5C5	R	0x00	RESULT[7:0]							
AUX_OT_OTCB_DAC_HI/LO	5C6	R	0x80	RESULT[7:0]							
	5C7	R	0x00	RESULT[7:0]							
AUX_UT_DAC_HI/LO	5C8	R	0x80	RESULT[7:0]							
	5C9	R	0x00	RESULT[7:0]							
AUX_VCBDONE_DAC_HI/LO	5CA	R	0x80	RESULT[7:0]							
	5CB	R	0x00	RESULT[7:0]							
AUX_VCM_HI/LO	5CC	R	0x80	RESULT[7:0]							
	5CD	R	0x00	RESULT[7:0]							
REFOVDAC_HI/LO	5D0	R	0x00	RESULT[7:0]							
	5D1	R	0x00	RESULT[7:0]							
DIAG_MAIN_HI/LO	5D2	R	0x00	RESULT[7:0]							
	5D3	R	0x00	RESULT[7:0]							
DIAG_AUX_HI/LO	5D4	R	0x00	RESULT[7:0]							
	5D5	R	0x00	RESULT[7:0]							
CURRENT_HI/MID/LO	5D6	R	0x80	RESULT[7:0]							
	5D7	R	0x00	RESULT[7:0]							
	5D8	R	0x00	RESULT[7:0]							
REG_INT_RSVD	780	R	0x33	INTERNAL USE. IGNORE VALUE FROM THIS ADDRESS							

Copyright © 2023 Texas Instruments Incorporated

Register Name	Addr Hex	RW Type	Reset Value	Data							
				Bit7	Bit6	Bit5	Bit4	Bit3	Bit2	Bit1	Bit0
DEBUG_UART_RC	781	R	0x00	RSVD		RC_IERR	RC_TXDIS	RC_SOF	RC_BYTE_ERR	RC_UNEXP	RC_CRC
DEBUG_UART_RR_TR	782	R	0x00	RSVD			TR_SOF	TR_WAIT	RR_SOF	RR_BYTE_ERR	RR_CRC
DEBUG_UART_DISCARD	789	R	0x00	COUNT[7:0]							
DEBUG_UART_VALID_HI/LO	78C	R	0x00	COUNT[7:0]							
	78D	R	0x00	COUNT[7:0]							
DEBUG_OTP_SEC_BLK	7A0	R	0x00	BLOCK[7:0]							
DEBUG_OTP_DED_BLK	7A1	R	0x00	BLOCK[7:0]							

Copyright © 2023 Texas Instruments Incorporated

8.5.4 Register Field Descriptions

8.5.4.1 Device Addressing Setup

8.5.4.1.1 DIR0_ADDR_OTP

Address	0x0000							
NVM	Bit 7	Bit 6	Bit 5	Bit 4	Bit 3	Bit 2	Bit 1	Bit 0
Name	SPARE[1:0]		ADDRESS[5:0]					
Reset	0	0	0	0	0	0	0	0

SPARE[1:0] = Spare

ADDRESS[5:0] = This register shows the default device address used when *[DIR_SEL]* = 0 and programmed in the OTP. Writing to this register won't change the device address actively in use. The *[DIR_SEL]* setting has no impact on BQ756506-Q1 since it is a standalone device using UART communication to host system.
This register is used for the system to program the device address to OTP, which will be loaded to the *DIR0_ADDR* register at POR. For programming, follow the OTP programming procedure.

8.5.4.1.2 DIR1_ADDR_OTP

Address	0x0001							
NVM	Bit 7	Bit 6	Bit 5	Bit 4	Bit 3	Bit 2	Bit 1	Bit 0
Name	SPARE[1:0]		ADDRESS[5:0]					
Reset	0	0	0	0	0	0	0	0

SPARE[1:0] = Spare

ADDRESS[5:0] = This register shows the default device address used when *[DIR_SEL]* = 1 and programmed in the OTP. Writing to this register won't change the device address actively in use. The *[DIR_SEL]* setting has no impact on BQ756506-Q1 since it is a standalone device using UART communication to host system.
This register is used for the system to program the device address to OTP, which will be loaded to the *DIR1_ADDR* register at POR. For programming, follow the OTP programming procedure.

8.5.4.1.3 CUST_MISC1 through CUST_MISC8

Address	0x0021 to 0x0028							
NVM	Bit 7	Bit 6	Bit 5	Bit 4	Bit 3	Bit 2	Bit 1	Bit 0
Name	DATA[7:0]							
Reset	0	0	0	0	0	0	0	0

DATA[7:0] = Customer scratch pad

8.5.4.1.4 DIR0_ADDR

Address	0x0306							
RW	Bit 7	Bit 6	Bit 5	Bit 4	Bit 3	Bit 2	Bit 1	Bit 0
Name	RSVD		ADDRESS[5:0]					
Reset	0	0	0	0	0	0	0	0

RSVD = Reserved

ADDRESS[5:0] = Always shows the current device address used by the device when *[DIR_SEL]* = 0. At POR, this register is loaded from the device address value in the OTP (same OTP device address loaded to *DIR0_ADDR_OTP* register). The *[DIR_SEL]* setting has no impact on BQ756506-Q1 since it is a standalone device using UART communication to host system. Host can re-address the device by writing a different device address to this register, and the device will take on the new address immediately.
Note: *CONTROL1[ADDR_WR]* = 1 is required to write to this register. See Section 8.5.4.3.7 for details.

8.5.4.1.5 DIR1_ADDR

Address	0x0307							
RW	Bit 7	Bit 6	Bit 5	Bit 4	Bit 3	Bit 2	Bit 1	Bit 0
Name	RSVD		ADDRESS[5:0]					

Copyright © 2023 Texas Instruments Incorporated

Reset	0	0	0	0	0	0	0	0
	RSVD = Reserved							
	ADDRESS[5:0] = Always shows the current device address used by the device when *[DIR_SEL]* = 1. At POR, this register is loaded from the device address value in the OTP (same OTP device address loaded to *DIR1_ADDR_OTP* register). The *[DIR_SEL]* setting has no impact on BQ756506-Q1 since it is a standalone device using UART communication to host system. Host can re-address the device by writing a different device address to this register, and the device will take on the new address immediately. Note: *CONTROL1[ADDR_WR]* = 1 is required to write to this register. See Section 8.5.4.3.7 for details.							

8.5.4.2 Device ID and Scratch Pad

8.5.4.2.1 PARTID

Address	**0x0500**							
Read Only	**Bit 7**	**Bit 6**	**Bit 5**	**Bit 4**	**Bit 3**	**Bit 2**	**Bit 1**	**Bit 0**
Name	PARTID[7:0]							
Reset	0	0	0	0	0	0	0	0
	PARTID[7:0] = Device Identification: 0x0A = BQ756506 All other codes = Reserved							

8.5.4.2.2 DEV_REVID

Address	0xE00							
Read Only	**Bit7**	**Bit6**	**Bit5**	**Bit4**	**Bit3**	**Bit2**	**Bit1**	**Bit0**
Reset	0	0	0	0	0	0	0	0
	A value of 0x00 indicates that the device is in normal operating mode. If a fault activates the Factory Testmode Detection, the value will be non-zero. Refer Safety Manual for details on SM426: Fact Testmode Detection.							

8.5.4.2.3 DIE_ID1 through DIE_ID9

Address	**0x0501**							
Read Only	**Bit 7**	**Bit 6**	**Bit 5**	**Bit 4**	**Bit 3**	**Bit 2**	**Bit 1**	**Bit 0**
Name	ID[7:0]							
Reset	0	0	0	0	0	0	0	0
	ID[7:0] = Device Revision 0x10 = Revision A0 0x11 = Revision A1 0x20 = Revision B0 0x21 = Revision B1 0x22 = Revision B2 All other codes = Reserved							

Address	**0x0502 to 0x0509**							
Read Only	**Bit 7**	**Bit 6**	**Bit 5**	**Bit 4**	**Bit 3**	**Bit 2**	**Bit 1**	**Bit 0**
Name	ID[7:0]							
Reset	0	0	0	0	0	0	0	0
	ID[7:0] = Die ID for TI factory use							

8.5.4.3 General Configuration and Control

8.5.4.3.1 DEV_CONF

Address	**0x0002**							

Copyright © 2023 Texas Instruments Incorporated

NVM	Bit 7	Bit 6	Bit 5	Bit 4	Bit 3	Bit 2	Bit 1	Bit 0
Name	RSVD	NO_ADJ_CB	RSVD	FCOMM_EN	TWO_STOP_EN	NFAULT_EN	RSVD	RSVD
Reset	0	1	0	1	0	1	0	0

RSVD = Reserved

NO_ADJ_CB = Indicates the device will not allow an adjacent CB FET to be turned on in manual CB control. If MCU has enabled an adjacent CB FET, device will not start CB even if host sends *[BAL_GO]* = 1.
0 = Device will allow two adjacent CB FETs to be enabled.
1 = Device will not allow adjacent CB FET to be enabled.

RSVD = Reserved — The bit should leave as default in BQ756506-Q1 since it is a standalone device using UART communication to host system.

FCOMM_EN = Enables the fault state detection through communication in ACTIVE mode.
0 = Disable
1 = Enable

TWO_STOP_EN = Enables two stop bits for the UART in case of severe oscillator error in the host and device.
0 = One STOP bit
1 = Two STOP bits

NFAULT_EN = Enables the NFAULT function.
0 = NFAULT always pulled up
1 = NFAULT pulled low to indicate an unmasked fault is detected.
Note: This bit setting does not affect the *FAULT_SUMMARY* register.

RSVD = Reserved — The bit has no significant impact in BQ756506-Q1 since it is a standalone device which a fault can directly trigger NFAULT pin.

RSVD = Reserved — The bit should leave as default in BQ756506-Q1 since it is a standalone device using UART communication to host system.

8.5.4.3.2 ACTIVE_CELL

Address	0x0003							
NVM	Bit 7	Bit 6	Bit 5	Bit 4	Bit 3	Bit 2	Bit 1	Bit 0
Name	SPARE[3:0]				NUM_CELL[3:0]			
Reset	0	0	0	0	0	0	0	0
Factory OTP Reset	0	0	0	0	1	0	1	0

SPARE[3:0] = Spare

NUM_CELL[3:0] = Configures the number of cells in series.
0x0 = 6S
0x1 = 6S
0x2 = 6S
:
0xA = 6S
Unused code defaults to *CHIP_TYPE[MAX_CH1:0]* setting (in factory trim).If the NUM_CELL setting has more channels than the device offers, it would be capped to higest number of channel the device offers.
Note: The minimum number of active channels is 6. For applications with fewer than 6 series cells, the software should ignore faults on unused channels. These will not automatically be masked. Refer to NFAULT in the application section for more details.

8.5.4.3.3 PWR_TRANSIT_CONF

Address	0x0018							
NVM	Bit 7	Bit 6	Bit 5	Bit 4	Bit 3	Bit 2	Bit 1	Bit 0
Name	SPARE[2:0]			TWARN_THR[1:0]		SLP_TIME[2:0]		
Reset	0	0	0	1	1	0	0	0

Copyright © 2023 Texas Instruments Incorporated

Factory Configuration default	0	0	0	1	0	0	0	0

SPARE[2:0] = Spare

TWARN_THR[1:0] = Sets the TWARN threshold.
00 = 85°C
01 = 95°C
10 = 105°C (default)
11 = 115°C

SLP_TIME[2:0] = A timeout in SLEEP mode. This timer starts counting when device enters SLEEP mode. When the timer expires, the device enters SHUTDOWN mode. The timer resets if device wakes up to ACTIVE mode.
000 = No timeout. Device remains in SLEEP mode (default at reset)
001 = 5 s
010 = 10 s
011 = 1 min
100 = 10 min
101 = 30 min
110 = 1 hour
111 = 2 hour

8.5.4.3.4 COMM_TIMEOUT_CONF

Address	**0x0019**							
NVM	**Bit 7**	**Bit 6**	**Bit 5**	**Bit 4**	**Bit 3**	**Bit 2**	**Bit 1**	**Bit 0**
Name	SPARE	CTS_TIME[2:0]			CTL_ACT	CTL_TIME[2:0]		
Reset	0	0	0	0	0	0	0	0

SPARE = Spare

CTS_TIME[2:0] = Sets the short communication timeout. When this timer expires, the device sets the *FAULT_SYS[CTL]* bit. This can be used as an alert to the system to prevent a long communication timeout.
000 = Disables short communication timeout (default at reset)
001 = 100 ms
010 = 2 s
011 = 10 s
100 = 1 min
101 = 10 min
110 = 30 min
111 = 1 hr

CTL_ACT = Configures the device action when long communication timeout timer expires.
0 = Sets *FAULT_SYS[CTL]* and sends device to SLEEP mode (default at reset)
1 = Sends the device to SHUTDOWN. *FAULT_SYS[CTL]* bit will not be set.

CTL_TIME[2:0] = Sets the long communication timeout. When this timer expires, the device takes the action configured by the *[CTL_ACT]* bit.
000 = Disables long communication timeout (default at reset)
001 = 100 ms
010 = 2 s
011 = 10 s
100 = 1 min
101 = 10 min
110 = 30 min
111 = 1 hr

8.5.4.3.5 TX_HOLD_OFF

Address	**0x001A**							
NVM	**Bit 7**	**Bit 6**	**Bit 5**	**Bit 4**	**Bit 3**	**Bit 2**	**Bit 1**	**Bit 0**
Name	DLY[7:0]							
Reset	0	0	0	0	0	0	0	0

DLY[7:0] = Sets the number of bit periods from 0 to 255 to delay after receiving the STOP bit of a command frame and before transmitting the 1st bit of response frame.

Copyright © 2023 Texas Instruments Incorporated

8.5.4.3.6 COMM_CTRL

Address	0x0308							
RW	Bit 7	Bit 6	Bit 5	Bit 4	Bit 3	Bit 2	Bit 1	Bit 0
Name	RSVD							
Reset	0	0	0	0	0	0	0	0
RSVD = Reserved								

8.5.4.3.7 CONTROL1

Address	0x0309							
RW	Bit 7	Bit 6	Bit 5	Bit 4	Bit 3	Bit 2	Bit 1	Bit 0
Name	RSVD				GOTO_ SHUTDOWN	GOTO_ SLEEP	SOFT_RESET	RSVD
Reset	0	0	0	0	0	0	0	0
RSVD = Reserved — The bit has no impact in BQ756506-Q1 since it is a standalone device which the host can send the ping signal directly								
GOTO_SHUTDOWN = Transitions device to SHUTDOWN mode. Bit is cleared on read. 0 = Ready 1 = Enter SHUTDOWN mode								
GOTO_SLEEP = Transitions device to SLEEP mode. Bit is cleared on read. 0 = Ready 1 = Enter SLEEP mode								
SOFT_RESET = Resets the digital to OTP default. Bit is cleared on read. 0 = Ready 1 = Reset device								
RSVD = Reserved								

8.5.4.3.8 CONTROL2

Address	0x030A							
RW	Bit 7	Bit 6	Bit 5	Bit 4	Bit 3	Bit 2	Bit 1	Bit 0
Name	RSVD							TSREF_EN
Reset	0	0	0	0	0	0	0	0
RSVD = Reserved — The bit has no impact in BQ756506-Q1 since it is a standalone device which the host can send the ping signal directly								

8.5.4.3.9 CUST_CRC_HI

Address	0x0036							
NVM	Bit 7	Bit 6	Bit 5	Bit 4	Bit 3	Bit 2	Bit 1	Bit 0
Name	CRC[7:0]							
Reset	0	1	0	1	0	1	1	1
Factory Configuration Reset	0	0	1	1	0	0	0	1
CRC[7:0] = High-byte of the host-calculated CRC for customer OTP space.								

8.5.4.3.10 CUST_CRC_LO

Address	0x0037							
NVM	Bit 7	Bit 6	Bit 5	Bit 4	Bit 3	Bit 2	Bit 1	Bit 0
Name	CRC[7:0]							
Reset	1	0	0	0	1	0	0	1

Copyright © 2023 Texas Instruments Incorporated

Factory Configuration Reset	1	1	1	1	0	0	1	1
CRC[7:0] = Low-byte of the host-calculated CRC for customer OTP space.								

8.5.4.3.11 CUST_CRC_RSLT_HI

Address	0x050C							
Read Only	Bit 7	Bit 6	Bit 5	Bit 4	Bit 3	Bit 2	Bit 1	Bit 0
Name	CRC[7:0]							
Reset	0	0	1	1	0	0	0	1
CRC[7:0] = High-byte of the device-calculated CRC for customer OTP space.								

8.5.4.3.12 CUST_CRC_RSLT_LO

Address	0x050D							
Read Only	Bit 7	Bit 6	Bit 5	Bit 4	Bit 3	Bit 2	Bit 1	Bit 0
Name	CRC[7:0]							
Reset	1	1	1	1	0	0	1	1
CRC[7:0] = Low-byte of the device-calculated CRC for customer OTP space.								

8.5.4.4 Operation Status

8.5.4.4.1 DIAG_STAT

Address	0x0526							
Read Only	Bit 7	Bit 6	Bit 5	Bit 4	Bit 3	Bit 2	Bit 1	Bit 0
Name	RSVD			DRDY_OTUT	DRDY_OVUV	DRDY_BIST_OTUT	DRDY_BIST_OVUV	DRDY_BIST_PWR
Reset	0	0	0	0	0	0	0	0
RSVD = Reserved								
DRDY_OTUT = Indicates the OTUT round robin has run at least once. This bit is cleared when *[OTUT_GO]* = 1 with *[OTUT_MODE1:0]* = 01 (start the OTUT round robin run) and set when at least 1 cycle of round robin is completed. 0 = OTUT has not started or first round robin has not completed yet. 1 = At least 1 cycle of round robin has completed.								
DRDY_OVUV = Indicates the OVUV round robin has at least run once. This bit is cleared when *[OVUV_GO]* = 1 with *[OVUV_MODE1:0]* = 01 (start the OVUV round robin run) and set when at least 1 cycle of round robin is completed. 0 = OVUV has not started or first round robin has not completed yet. 1 = At least 1 cycle of round robin has completed.								
DRDY_BIST_OTUT = Indicates the status of the OTUT protector diagnostic. This bit is cleared when *[OTUT_GO]* = 1 with *[OTUT_MODE1:0]* = 10 (start the BIST run) and set when the BIST cycle is completed. 0 = Not started or still running. 1 = BIST cycle completed.								
DRDY_BIST_OVUV = Indicates the status of the OVUV protector diagnostic. This bit is cleared when *[OVUV_GO]* = 1 with *[OVUV_MODE1:0]* = 10 (start the BIST run) and set when the BIST cycle is completed. 0 = Not started or still running. 1 = BIST cycle completed.								
DRDY_BIST_PWR = Indicates the status of the power supplies diagnostic. This bit is cleared when *[PWR_BIST_GO]* = 1 (start the BIST run) and set when the BIST cycle is completed. 0 = Not started or still running. 1 = BIST cycle completed.								

Copyright © 2023 Texas Instruments Incorporated

8.5.4.4.2 ADC_STAT1

Address	0x0527							
Read Only	**Bit 7**	**Bit 6**	**Bit 5**	**Bit 4**	**Bit 3**	**Bit 2**	**Bit 1**	**Bit 0**
Name	RSVD			DRDY_CS_ADC	DRDY_AUX_GPIO	DRDY_AUX_CELL	DRDY_AUX_MISC	DRDY_MAIN_ADC
Reset	0	0	0	0	0	0	0	0

RSVD = Reserved

DRDY_CS_ADC = CS ADC has completed at least a single measurement. This bit is cleared when *[CS_MAIN_GO]* is changed from 0 to 1.

DRDY_AUX_GPIO = AUX ADC has completed at least a single measurement on all active GPIO channels configured for ADC measurement. This bit is cleared when *[AUX_GO]* is changed from 0 to 1.
0 = Not ready
1 = All GPIO inputs have completed at least a single measurement by the AUX ADC

DRDY_AUX_CELL = Device has completed at least a single measurement on all AUXCELL channel(s) set by *[AUX_CELL_SEL4:0]*. This bit is cleared when *[AUX_GO]* is changed from 0 to 1.
0 = Not ready
1 = All *[AUX_CELL_SEL4:0]* configured channels have completed at least a single measurement

DRDY_AUX_MISC = Device has completed at least a single measurement on all AUX ADC MISC input channels (that is, completed a single round robin run). This bit is cleared when *[AUX_GO]* is changed from 0 to 1.
0 = Not ready
1 = All AUX ADC MISC inputs have completed at least a single measurement

DRDY_MAIN_ADC = Device has completed at least a single measurement on all Main ADC input channels, including all GPIOs (that is, completed a single round robin run). This bit is cleared when *[CS_MAIN_GO]* is changed from 0 to 1.
0 = Not ready
1 = All Main ADC inputs have completed at least a single measurement

8.5.4.4.3 ADC_STAT2

Address	0x0528							
Read Only	**Bit 7**	**Bit 6**	**Bit 5**	**Bit 4**	**Bit 3**	**Bit 2**	**Bit 1**	**Bit 0**
Name	RSVD		DRDY_LPF	DRDY_GPIO	DRDY_VCOW	DRDY_CBOW	DRDY_CBFET	DRDY_VCCB
Reset	0	0	0	0	0	0	0	0

RSVD = Reserved

DRDY_LPF = Device has finished at least 1 round of LPF checks on all active cell channels. The comparison continues in the background as long as the Main ADC is running. This bit is cleared when *[CS_MAIN_GO]* = 1.
This data ready bit is also used when a fault is injected to test the DIAG_LPF engine using the *[LPF_FLT_INJ]* bit. When *[LPF_FLT_INJ]* = 1, this bit is cleared to 0 and the device will restart the VC and BB channel LPF checks from the beginning using the fault inject *[DIAG_LPF]*. Once all channel LPFs are checked, the *[DRDY_LPF]* = 1.
0 = Not ready
1 = Diagnostic comparison finished

DRDY_GPIO = Device has finished the GPIO Main and AUX ADC diagnostic comparisons on all active channels and the comparisons are stopped. This bit is cleared when *[COMP_ADC_GO]* = 1.
0 = Not ready
1 = Diagnostic comparison finished

DRDY_VCOW = Device has finished VC OW diagnostic comparison on all active channels and the comparison is stopped. This bit is cleared when *[COMP_ADC_GO]* = 1.
0 = Not ready
1 = Diagnostic comparison finished

DRDY_CBOW = Device has finished CB OW diagnostic comparison on all active channels and the comparison is stopped. This bit is cleared when *[COMP_ADC_GO]* = 1.
0 = Not ready
1 = Diagnostic comparison finished

Copyright © 2023 Texas Instruments Incorporated

DRDY_CBFET =	Device has finished CB FET diagnostic comparison on all active channels and the comparison is stopped. This bit is cleared when *[COMP_ADC_GO]* = 1. 0 = Not ready 1 = Diagnostic comparison finished
DRDY_VCCB =	Device has finished VCELL vs. AUXCELL diagnostic comparison on all active channels. This bit is cleared when *[COMP_ADC_GO]* = 1. 0 = Not ready 1 = Diagnostic comparison finished

8.5.4.4.4 GPIO_STAT

Address	**0x052A**							
Read Only	**Bit 7**	**Bit 6**	**Bit 5**	**Bit 4**	**Bit 3**	**Bit 2**	**Bit 1**	**Bit 0**
Name	GPIO8	GPIO7	GPIO6	GPIO5	GPIO4	GPIO3	GPIO2	GPIO1
Reset	0	0	0	0	0	0	0	0
GPIO1 through GPIO8 =	When GPIO is configured as digital input or output, this register shows the GPIO status. 0 = Low 1 = High							

8.5.4.4.5 BAL_STAT

Address	**0x052B**							
Read Only	**Bit 7**	**Bit 6**	**Bit 5**	**Bit 4**	**Bit 3**	**Bit 2**	**Bit 1**	**Bit 0**
Name	INVALID_CBCONF	OT_PAUSE_DET	CB_INPAUSE	RSVD	CB_RUN	ABORTFLT	RSVD	CB_DONE
Reset	0	0	0	0	0	0	0	0
	R	R	R	R	R	R	R	R
INVALID_CBCONF =	Indicates CB is unable to start (after *[BAL_GO]* = 1) due to improper CB control settings. Incorrect settings include: • More than three cells are enabled for CB. • More than two adjacent cells are enabled for CB if *DEVICE_CONF[NO_ADJ_CB]* = 0. • Any adjacent cells are enabled for CB if *DEVICE_CONF[NO_ADJ_CB]* = 1. This bit is updated every time *[BAL_GO]* = 1. 0 = Valid CB setting 1 = Invalid CB setting							
OT_PAUSE_DET =	Indicates the OTCB is detected if *[OTCB_EN]* = 1. The bit is also set if CB TWARN is detected, which will also pause CB. Valid only after *[BAL_GO]* = 1 0 = No OTCB or CB TWARN is detected 1 = Any NTC thermistor measurement is greater than *OTCB_THR[3:0]* setting, or die (CBFET) temperature is greater than CB TWARN							
CB_INPAUSE =	Indicates the cell balancing pause status. 0 = CB is running or not started 1 = Paused (can be caused by OTCB detection, or host sets *[CB_PAUSE]* = 1)							
RSVD =	Reserved							
CB_RUN =	Indicates cell balancing is running. Only valid after *[BAL_GO]* = 1. Does not indicate the module balancing status. This bit remains as 1 even if CB is in pause state. 0 = Completed or not started 1 = At least 1 cell is in active cell balancing							
ABORTFLT =	Indicates cell balancing is aborted due to detection of unmasked fault. Cleared when *BAL_CTRL1[BAL_GO]* = 1. CB abort does not trigger if CB is in pause (*[CB_INPAUSE]* =1) even if an unmasked fault is detected. The abort at fault function will resume if CB is no longer in pause state. 0 = Not aborted or cell balancing not running 1 = Aborted							
RSVD =	Reserved							

Copyright © 2023 Texas Instruments Incorporated

CB_DONE =	Indicates all cell balancing is completed. Cleared when *BAL_CTRL1[BAL_GO]* = 1. 0 = Cell balancing is still running or has not started 1 = All cell balancing is completed

8.5.4.4.6 DEV_STAT

Address	0x052C							
Read Only	**Bit 7**	**Bit 6**	**Bit 5**	**Bit 4**	**Bit 3**	**Bit 2**	**Bit 1**	**Bit 0**
Name	RSVD	FACT_CRC_DONE	CUST_CRC_DONE	OTUT_RUN	OVUV_RUN	CS_RUN	AUX_RUN	MAIN_RUN
Reset	0	0	0	0	0	0	0	0

RSVD =	Reserved
FACT_CRC_DONE =	Indicates the status of the factory CRC state machine. This bit is set when the factory CRC is calculated and verified internally at least once. A read from this register will clear this bit. 0 = Not complete 1 = Complete (cleared on read)
CUST_CRC_DONE =	Indicates the status of the customer CRC state machine. This bit is set when the CRC is calculated and compared to the *CUST_CRC** registers at least once. A read from this register will clear this bit. 0 = Not complete 1 = Complete (cleared on read)
OTUT_RUN =	Shows the status of the OTUT protector comparators. This bit is set when OTUT BIST starts. When BIST is completed or aborted, the device will turn off the OT and UT comparators automatically, and then this bit will be cleared). 0 = off (that is, OTUT is not started or when *[OTUT_GO]* = 1 and *[OTUT_MODE1:0]* = 0) 1 = on (that is, when *[OTUT_GO]* = 1 and *[OTUT_MODE1:0]* is non-zero)
OVUV_RUN =	Shows the status of the OVUV protector comparators. This bit is set when OVUV BIST starts. When BIST is completed or aborted, the device will turn off the OV and UV comparators automatically, and then this bit will be cleared). 0 = off (that is, OVUV is not started or when *[OVUV_GO]* = 1 and *[OVUV_MODE1:0]* = 0) 1 = on (that is, when *[OVUV_GO]* = 1 and *[OVUV_MODE1:0]* is non-zero)
CS_RUN =	Shows the status of the CS ADC. 0 = off 1 = on
AUX_RUN =	Shows the status of the AUX ADC. 0 = off 1 = on
MAIN_RUN =	Shows the status of the Main ADC. 0 = off 1 = on

8.5.4.5 ADC Configuration and Control

8.5.4.5.1 ADC_CONF1

Address	0x0007							
NVM	**Bit 7**	**Bit 6**	**Bit 5**	**Bit 4**	**Bit 3**	**Bit 2**	**Bit 1**	**Bit 0**
Name	AUX_SETTLE[1:0]		LPF_SR[2:0]			LPF_VCELL[2:0]		
Reset	0	0	0	0	0	0	0	0

AUX_SETTLE[1:0] =	The AUXCELL configures the AUX CELL settling time. Each AUXCELL has to wait for the anti-aliasing filter (AAF) settling time in order to consider as a valid measurement. These bits provide the option to use different AAF or bypass an AAF to trade for a fast measurement. 00 = 4.3 ms 01 = 2.3 ms 10 = 1.3 ms 11 = Reserved
LPF_SR[2:0] =	Configures the post main SAR ADC low-pass filter cut-off frequency for SRP/N measurement. Same options as the *LPF_VCELL[2:0]*.

Copyright © 2023 Texas Instruments Incorporated

LPF_VCELL[2:0] =	Configures the post ADC low-pass filter cut-off frequency for VCELL measurement. 0x0 = 6.5 Hz (154 ms average) 0x1 = 13 Hz (77 ms average) 0x2 = 26 Hz (38 ms average) 0x3 = 53 Hz (19 ms average) 0x4 = 111 Hz (9 ms average) 0x5 = 240 Hz (4 ms average) 0x6 = 600 Hz (1.6 ms average) 0x7 = 240 Hz

8.5.4.5.2 ADC_CONF2

Address	0x0008							
NVM	**Bit 7**	**Bit 6**	**Bit 5**	**Bit 4**	**Bit 3**	**Bit 2**	**Bit 1**	**Bit 0**
Name	SPARE[1:0]		ADC_DLY[5:0]					
Reset	0	0	0	0	0	0	0	0
SPARE[1:0] =	Spare							
ADC_DLY[5:0] =	If *[CS_MAIN_GO]* bit is written to 1, bit Main ADC (applies to CS ADC too) is delayed for this setting time before being enabled to start the conversion. The option ranges from 0 µs (no delay) to 200 µs in 5-µs steps. Undefined code = 0 µs (no delay)							

8.5.4.5.3 MAIN_ADC_CAL1

Address	0x001B							
NVM	**Bit 7**	**Bit 6**	**Bit 5**	**Bit 4**	**Bit 3**	**Bit 2**	**Bit 1**	**Bit 0**
Name	GAINL[7:0]							
Reset	0	0	0	0	0	0	0	0
GAINL[7:0] =	Main ADC 25°C gain calibration result (lower 8-bit). If customer performs gain calibration during production flow, the gain result can be programmed to OTP and will be sent to this gain register at device reset. The device automatically applies this data during ADC correction step. Range from -0.78125% to 0.7782% in 0.0031% steps.							

8.5.4.5.4 MAIN_ADC_CAL2

Address	0x001C							
NVM	**Bit 7**	**Bit 6**	**Bit 5**	**Bit 4**	**Bit 3**	**Bit 2**	**Bit 1**	**Bit 0**
Name	GAINH	OFFSET[6:0]						
Reset	0	0	0	0	0	0	0	0
GAINH	Main ADC 25°C gain calibration result (MS bit). If customer performs gain calibration during production flow, the gain result can be programmed to OTP and will be sent to this gain register at device reset. The device automatically applies this data during ADC correction step. Range from -0.78125% to 0.7782% in 0.0031% steps.							
OFFSET[6:0] =	Main ADC 25°C offset calibration result. If customer performs offset calibration during production flow, the offset result can be programmed to OTP and will be sent to this offset register at device reset. The device automatically applies this data during ADC correction step. Range from -12.20703-mV to 12.01630-mV in 0.19073-mV steps							

8.5.4.5.5 AUX_ADC_CAL1

Address	0x001D							
NVM	**Bit 7**	**Bit 6**	**Bit 5**	**Bit 4**	**Bit 3**	**Bit 2**	**Bit 1**	**Bit 0**
Name	GAINL[7:0]							
Reset	0	0	0	0	0	0	0	0

Copyright © 2023 Texas Instruments Incorporated

GAINL[7:0] =	AUX ADC 25°C gain calibration result (lower 8-bit). If customer performs gain calibration during production flow, the gain result can be programmed to OTP and will be sent to this gain register at device reset. The device automatically applies this data during ADC correction step. Range from -0.78125% to 0.7782% in 0.0031% steps.

8.5.4.5.6 AUX_ADC_CAL2

Address	0x001E							
NVM	**Bit 7**	**Bit 6**	**Bit 5**	**Bit 4**	**Bit 3**	**Bit 2**	**Bit 1**	**Bit 0**
Name	GAINH	OFFSET[6:0]						
Reset	0	0	0	0	0	0	0	0

GAINH	AUX ADC 25°C gain calibration result (MS bit). If customer performs gain calibration during production flow, the gain result can be programmed to OTP and will be sent to this gain register at device reset. The device automatically applies this data during ADC correction step. Range from -0.78125% to 0.7782% in 0.0031% steps.
OFFSET[6:0] =	AUX ADC 25°C offset calibration result. If customer performs offset calibration during production flow, the offset result can be programmed to OTP and will be sent to this offset register at device reset. The device automatically applies this data during ADC correction step. Range from -12.20703-mV to 12.01630-mV in 0.19073-mV steps

8.5.4.5.7 CS_ADC_CAL1

Address	0x001F							
NVM	**Bit 7**	**Bit 6**	**Bit 5**	**Bit 4**	**Bit 3**	**Bit 2**	**Bit 1**	**Bit 0**
Name	GAINL[7:0]							
Reset	0	0	0	0	0	0	0	0

GAINl[7:0] =	CS ADC gain correction, lower 8-bits Range from -0.78125% to 0.78049% in 0.0008% steps.

8.5.4.5.8 CS_ADC_CAL2

Address	0x0020							
NVM	**Bit 7**	**Bit 6**	**Bit 5**	**Bit 4**	**Bit 3**	**Bit 2**	**Bit 1**	**Bit 0**
Name	GAINH[2:0]			OFFSET[4:0]				
Reset	0	0	0	0	0	0	0	0

OFFSET[4:0] =	8-bit register for CS ADC offset correction. Range from -3.8147-µV to 3.57628-µV in 0.23842-µV steps.
GAINH[2:0]	CS ADC gain correction, upper 3-bits Range from -0.78125% to 0.78049% in 0.0008% steps.

8.5.4.5.9 ADC_CTRL1

Address	0x030D							
RW	**Bit 7**	**Bit 6**	**Bit 5**	**Bit 4**	**Bit 3**	**Bit 2**	**Bit 1**	**Bit 0**
Name	RSVD	CS_DR[1:0]		LPF_SR_EN	LPF_VCELL_EN	CS_MAIN_GO	CS_MAIN_MODE[1:0]	
Reset	0	0	0	0	0	0	0	0

RSVD =	Reserved
CS_DR[1:0] =	Configures the desired single measurement time of the CS ADC. 00 = 768 µs 01 = 1.536 ms 10 = 3.072 ms 11 = 12.288 ms
LPF_SR_EN =	Enables digital low-pass filter post-ADC conversion. LPF applies to SRP/N measurements only. The cut-off frequency is configured by *ADC_CONFIG1[LPF_SR[2:0]*.

Copyright © 2023 Texas Instruments Incorporated

LPF_VCELL_EN =	Enables digital low-pass filter post-ADC conversion. LPF applies to VCELL measurements only. The cut-off frequency is configured by *ADC_CONFIG1[LPF_VCELL[2:0]*.
CS_MAIN_GO =	Starts main ADC conversion. When this bit is written to 1, all Main ADC inputs are sampled. Once the Main ADC is started, any change to the Main ADC control setting has no effect until this bit is written to 1 again. This bit is cleared to 0 in read. 0 = Ready. Writing 0 has no effect 1 = Start Main ADC This control also applies to the CS ADC.In sleep mode, CS ADC need to be disabled, otherwise, it consumes extra current ICS_ADC
CS_MAIN_MODE[1:0] =	Sets the Main ADC run mode. 00 = Main ADC not running 01 = Single run. Run the main ADC round robin 8 times and then stop 10 = Continuous run. Continuous running the Main ADC round robin until host sends command to stop 11 = Reserved This control also applies to the CS ADC.

8.5.4.5.10 ADC_CTRL2

Address	0x030E							
RW	**Bit 7**	**Bit 6**	**Bit 5**	**Bit 4**	**Bit 3**	**Bit 2**	**Bit 1**	**Bit 0**
Name	RSVD	MAINBB_AFE_DIS	AUX_CELL_ALIGN	AUX_CELL_SEL[4:0]				
Reset	0	0	0	0	0	0	0	0

RSVD =	Reserved
MAINBB_AFE_DIS =	Disconnected main ADC SRP/SRN AFE from SRP/SRN pin, this would leave SRP/SRN sensed by CS ADC stand alone. 0 = Connected1 = Disconnected
AUX_CELL_ALIGN =	Align the AUX ADC AUXCELL measurement to Main ADC CELL1 or CELL8 0 = Align to Main ADC CELL1 1 = RSVD
AUX_CELL_SEL[4:0] =	Selects which AUXCELL channel(s) will be multiplexed through the AUX ADC. 0x00 = Run all active cell channels set by *ACTIVE_CELL_CONF* register 0x01 = SRP/SRN are not connected to AUX ADC 0x02 = Lock to AUXCELL1 0x03 = Lock to AUXCELL2 0x04 = Lock to AUXCELL3 : 0x =07 Lock to AUXCELL6 0x08 to 0x1F = RSVD NOTE: If inactive channel or RSVD code is selected, device will not perform AUX ADC conversion on the AUXCELL slot and the *AUX_CELL_HI/LO* registers will be kept in reset value.

8.5.4.5.11 ADC_CTRL3

Address	0x030F							
RW	**Bit 7**	**Bit 6**	**Bit 5**	**Bit 4**	**Bit 3**	**Bit 2**	**Bit 1**	**Bit 0**
Name	RSVD	AUX_GPIO_SEL[3:0]				AUX_GO	AUX_MODE[1:0]	
Reset	0	0	0	0	0	0	0	0

RSVD =	Reserved
AUX_GPIO_SEL[3:0] =	Selects which GPIO channel(s) will be multiplexed through the AUX ADC to use for temperature measurement diagnostic. If this selection is not set to 0x00, the AUX ADC will lock onto a single GPIO channel and the measurement result is output to the *AUX_GPIO_HI/LO* registers. 0x00 = AUX ADC cycles through all GPIO channel(s) that are configured as ADC only or ADC and OTUT. 0x01 = Lock to GPIO1 0x02 = Lock to GPIO2 : 0x08 = Lock to GPIO8 All other codes are RSVD. NOTE: If GPIO is not configured for ADC measurement or RSVD codes are selected, device will not perform AUX ADC conversion on the GPIO slot and the *AUX_GPIO_HI/LO* registers will be kept in reset value.

Copyright © 2023 Texas Instruments Incorporated

AUX_GO =	Starts AUX ADC conversion. When this bit is written to 1, all AUX ADC inputs are sampled. Once the AUX ADC is started, any change to the AUX ADC control setting has no effect until this bit is written to 1 again. This bit is cleared to 0 in read. 0 = Ready. Writing 0 has no effect. 1 = Start AUX ADC
AUX_MODE[1:0] =	Sets the Main ADC run mode. 00 = AUX ADC not running 01 = Single run. Run the AUX ADC round robin once and then stop. 10 = Continuous run. Continually run the AUX ADC round robin until host sends command to stop. 11 = 8-round-robin run to measure all eight GPIOs once.

Copyright © 2023 Texas Instruments Incorporated

8.5.4.6 ADC Measurement Results

8.5.4.6.1 VCELL6_HI/LO

VCELL6_HI

Address	0x057C							
Read Only	Bit 7	Bit 6	Bit 5	Bit 4	Bit 3	Bit 2	Bit 1	Bit 0
Name	RESULT[7:0]							
Reset	1	0	0	0	0	0	0	0
RESULT[7:0] = The ADC measurement result of the high-byte of the Cell6 voltage in 2s complement. When host reads this register, the device locks the Cell6 voltage low-byte from updating until the high-byte and low-byte registers are read.								

VCELL6_LO

Address	0x057D							
Read Only	Bit 7	Bit 6	Bit 5	Bit 4	Bit 3	Bit 2	Bit 1	Bit 0
Name	RESULT[7:0]							
Reset	0	0	0	0	0	0	0	0
RESULT[7:0] = The ADC measurement result of the low-byte of the Cell6 voltage in 2s complement.								

8.5.4.6.2 VCELL5_HI/LO

VCELL5_HI

Address	0x057E							
Read Only	Bit 7	Bit 6	Bit 5	Bit 4	Bit 3	Bit 2	Bit 1	Bit 0
Name	RESULT[7:0]							
Reset	1	0	0	0	0	0	0	0
RESULT[7:0] = The ADC measurement result of the high-byte of the Cell5 voltage in 2s complement. When host reads this register, the device locks the Cell5 voltage low-byte from updating until the high-byte and low-byte registers are read.								

VCELL5_LO

Address	0x057F							
Read Only	Bit 7	Bit 6	Bit 5	Bit 4	Bit 3	Bit 2	Bit 1	Bit 0
Name	RESULT[7:0]							
Reset	0	0	0	0	0	0	0	0
RESULT[7:0] = The ADC measurement result of the low-byte of the Cell5 voltage in 2s complement.								

8.5.4.6.3 VCELL4_HI/LO

VCELL4_HI

Address	0x0580							
Read Only	Bit 7	Bit 6	Bit 5	Bit 4	Bit 3	Bit 2	Bit 1	Bit 0
Name	RESULT[7:0]							
Reset	1	0	0	0	0	0	0	0
RESULT[7:0] = The ADC measurement result of the high-byte of the Cell4 voltage in 2s complement. When host reads this register, the device locks the Cell4 voltage low-byte from updating until the high-byte and low-byte registers are read.								

VCELL4_LO

Copyright © 2023 Texas Instruments Incorporated

Address	0x0581							
Read Only	Bit 7	Bit 6	Bit 5	Bit 4	Bit 3	Bit 2	Bit 1	Bit 0
Name	RESULT[7:0]							
Reset	0	0	0	0	0	0	0	0
RESULT[7:0] = The ADC measurement result of the low-byte of the Cell4 voltage in 2s complement.								

8.5.4.6.4 VCELL3_HI/LO

VCELL3_HI

Address	0x0582							
Read Only	Bit 7	Bit 6	Bit 5	Bit 4	Bit 3	Bit 2	Bit 1	Bit 0
Name	RESULT[7:0]							
Reset	1	0	0	0	0	0	0	0
RESULT[7:0] = The ADC measurement result of the high-byte of the Cell3 voltage in 2s complement. When host reads this register, the device locks the Cell3 voltage low-byte from updating until the high-byte and low-byte registers are read.								

VCELL3_LO

Address	0x0583							
Read Only	Bit 7	Bit 6	Bit 5	Bit 4	Bit 3	Bit 2	Bit 1	Bit 0
Name	RESULT[7:0]							
Reset	0	0	0	0	0	0	0	0
RESULT[7:0] = The ADC measurement result of the low-byte of the Cell3 voltage in 2s complement.								

8.5.4.6.5 VCELL2_HI/LO

VCELL2_HI

Address	0x0584							
Read Only	Bit 7	Bit 6	Bit 5	Bit 4	Bit 3	Bit 2	Bit 1	Bit 0
Name	RESULT[7:0]							
Reset	1	0	0	0	0	0	0	0
RESULT[7:0] = The ADC measurement result of the high-byte of the Cell2 voltage in 2s complement. When host reads this register, the device locks the Cell2 voltage low-byte from updating until the high-byte and low-byte registers are read.								

VCELL2_LO

Address	0x0585							
Read Only	Bit 7	Bit 6	Bit 5	Bit 4	Bit 3	Bit 2	Bit 1	Bit 0
Name	RESULT[7:0]							
Reset	0	0	0	0	0	0	0	0
RESULT[7:0] = The ADC measurement result of the low-byte of the Cell2 voltage in 2s complement.								

8.5.4.6.6 VCELL1_HI/LO

VCELL1_HI

Address	0x0586							
Read Only	Bit 7	Bit 6	Bit 5	Bit 4	Bit 3	Bit 2	Bit 1	Bit 0

Copyright © 2023 Texas Instruments Incorporated

Name	RESULT[7:0]							
Reset	1	0	0	0	0	0	0	0
RESULT[7:0] = The ADC measurement result of the high-byte of the Cell1 voltage in 2s complement. When host reads this register, the device locks the Cell1 voltage low-byte from updating until the high-byte and low-byte registers are read.								

VCELL1_LO

Address	0x0587							
Read Only	Bit 7	Bit 6	Bit 5	Bit 4	Bit 3	Bit 2	Bit 1	Bit 0
Name	RESULT[7:0]							
Reset	0	0	0	0	0	0	0	0
RESULT[7:0] = The ADC measurement result of the low-byte of the Cell1 Voltage in 2s complement.								

8.5.4.6.7 MAIN_CURRENT_HI/LO

MAIN_CURRENT_HI

Address	0x0588							
Read Only	Bit 7	Bit 6	Bit 5	Bit 4	Bit 3	Bit 2	Bit 1	Bit 0
Name	RESULT[7:0]							
Reset	1	0	0	0	0	0	0	0
RESULT[7:0] = The ADC measurement result of the high-byte of the differential (SRP – SRN) in 2s complement. When host reads this register, the device locks the low-byte from updating until the high-byte and low-byte registers are read.								

MAIN_CURRENT_LO

Address	0x0589							
Read Only	Bit 7	Bit 6	Bit 5	Bit 4	Bit 3	Bit 2	Bit 1	Bit 0
Name	RESULT[7:0]							
Reset	0	0	0	0	0	0	0	0
RESULT[7:0] = The ADC measurement result of the low-byte of the differential (SRP – SRN) in 2s complement.								

8.5.4.6.8 CURRENT_HI/MID/LO

CURRENT_HI

Address	0x0506							
Read Only	Bit 7	Bit 6	Bit 5	Bit 4	Bit 3	Bit 2	Bit 1	Bit 0
Name	RESULT[7:0]							
Reset	1	0	0	0	0	0	0	0
RESULT[7:0] = The high-byte of the differential (SRP – SRN) in 2s complement from CS ADC. When host reads this register, the device locks the mid- and low-byte from update until the high-byte and low-byte registers are read.								

CURRENT_MID

Address	0x0507							
Read Only	Bit 7	Bit 6	Bit 5	Bit 4	Bit 3	Bit 2	Bit 1	Bit 0
Name	RESULT[7:0]							
Reset	0	0	0	0	0	0	0	0

Copyright © 2023 Texas Instruments Incorporated

RESULT[7:0] =	The mid-byte of the differential (SRP – SRN) in 2s complement from CS ADC.

CURRENT_LO

Address	0x0508							
Read Only	Bit 7	Bit 6	Bit 5	Bit 4	Bit 3	Bit 2	Bit 1	Bit 0
Name	RESULT[7:0]							
Reset	0	0	0	0	0	0	0	0
RESULT[7:0] =	The low-byte of the differential (SRP – SRN) in 2s complement from CS ADC.							

8.5.4.6.9 TSREF_HI/LO

TSREF_HI

Address	0x058C							
Read Only	Bit 7	Bit 6	Bit 5	Bit 4	Bit 3	Bit 2	Bit 1	Bit 0
Name	RESULT[7:0]							
Reset	1	0	0	0	0	0	0	0
RESULT[7:0] =	The TSREF high-byte result from Main ADC. When host reads this register, the device locks the TSREF low-byte from updating until the high-byte and low-byte registers are read.							

TSREF_LO

Address	0x058D							
Read Only	Bit 7	Bit 6	Bit 5	Bit 4	Bit 3	Bit 2	Bit 1	Bit 0
Name	RESULT[7:0]							
Reset	0	0	0	0	0	0	0	0
RESULT[7:0] =	The TSREF low-byte result from Main ADC							

8.5.4.6.10 GPIO1_HI/LO

GPIO1_HI

Address	0x058E							
Read Only	Bit 7	Bit 6	Bit 5	Bit 4	Bit 3	Bit 2	Bit 1	Bit 0
Name	RESULT[7:0]							
Reset	1	0	0	0	0	0	0	0
RESULT[7:0] =	The ADC measurement high-byte result of the GPIO1. When host reads this register, the device locks the GPIO1 low-byte from updating until the high-byte and low-byte registers are read.							

GPIO1_LO

Address	0x058F							
Read Only	Bit 7	Bit 6	Bit 5	Bit 4	Bit 3	Bit 2	Bit 1	Bit 0
Name	RESULT[7:0]							
Reset	0	0	0	0	0	0	0	0
RESULT[7:0] =	The ADC measurement low-byte result of the GPIO1.							

Copyright © 2023 Texas Instruments Incorporated

8.5.4.6.11 GPIO2_HI/LO

GPIO2_HI

Address	0x0590							
Read Only	Bit 7	Bit 6	Bit 5	Bit 4	Bit 3	Bit 2	Bit 1	Bit 0
Name	RESULT[7:0]							
Reset	1	0	0	0	0	0	0	0
RESULT[7:0] = The ADC measurement high-byte result of the GPIO2. When host reads this register, the device locks the GPIO2 low-byte from updating until the high-byte and low-byte registers are read.								

GPIO2_LO

Address	0x0591							
Read Only	Bit 7	Bit 6	Bit 5	Bit 4	Bit 3	Bit 2	Bit 1	Bit 0
Name	RESULT[7:0]							
Reset	0	0	0	0	0	0	0	0
RESULT[7:0] = The ADC measurement low-byte result of the GPIO2.								

8.5.4.6.12 GPIO3_HI/LO

GPIO3_HI

Address	0x0592							
Read Only	Bit 7	Bit 6	Bit 5	Bit 4	Bit 3	Bit 2	Bit 1	Bit 0
Name	RESULT[7:0]							
Reset	1	0	0	0	0	0	0	0
RESULT[7:0] = The ADC measurement high-byte result of the GPIO3. When host reads this register, the device locks the GPIO3 low-byte from updating until the high-byte and low-byte registers are read.								

GPIO3_LO

Address	0x0593							
Read Only	Bit 7	Bit 6	Bit 5	Bit 4	Bit 3	Bit 2	Bit 1	Bit 0
Name	RESULT[7:0]							
Reset	0	0	0	0	0	0	0	0
RESULT[7:0] = The ADC measurement low-byte result of the GPIO3.								

8.5.4.6.13 GPIO4_HI/LO

GPIO4_HI

Address	0x0594							
Read Only	Bit 7	Bit 6	Bit 5	Bit 4	Bit 3	Bit 2	Bit 1	Bit 0
Name	RESULT[7:0]							
Reset	1	0	0	0	0	0	0	0
RESULT[7:0] = The ADC measurement high-byte result of the GPIO4. When host reads this register, the device locks the GPIO4 low-byte from updating until the high-byte and low-byte registers are read.								

GPIO4_LO

Copyright © 2023 Texas Instruments Incorporated

Address	0x0595							
Read Only	Bit 7	Bit 6	Bit 5	Bit 4	Bit 3	Bit 2	Bit 1	Bit 0
Name	RESULT[7:0]							
Reset	0	0	0	0	0	0	0	0
RESULT[7:0] = The ADC measurement low-byte result of the GPIO4.								

8.5.4.6.14 GPIO5_HI/LO

GPIO5_HI

Address	0x0596							
Read Only	Bit 7	Bit 6	Bit 5	Bit 4	Bit 3	Bit 2	Bit 1	Bit 0
Name	RESULT[7:0]							
Reset	1	0	0	0	0	0	0	0
RESULT[7:0] = The ADC measurement high-byte result of the GPIO5. When host reads this register, the device locks the GPIO5 low-byte from updating until the high-byte and low-byte registers are read.								

GPIO5_LO

Address	0x0597							
Read Only	Bit 7	Bit 6	Bit 5	Bit 4	Bit 3	Bit 2	Bit 1	Bit 0
Name	RESULT[7:0]							
Reset	0	0	0	0	0	0	0	0
RESULT[7:0] = The ADC measurement low-byte result of the GPIO5.								

8.5.4.6.15 GPIO6_HI/LO

GPIO6_HI

Address	0x0598							
Read Only	Bit 7	Bit 6	Bit 5	Bit 4	Bit 3	Bit 2	Bit 1	Bit 0
Name	RESULT[7:0]							
Reset	1	0	0	0	0	0	0	0
RESULT[7:0] = The ADC measurement high-byte result of the GPIO6. When host reads this register, the device locks the GPIO6 low-byte from updating until the high-byte and low-byte registers are read.								

GPIO6_LO

Address	0x0599							
Read Only	Bit 7	Bit 6	Bit 5	Bit 4	Bit 3	Bit 2	Bit 1	Bit 0
Name	RESULT[7:0]							
Reset	0	0	0	0	0	0	0	0
RESULT[7:0] = The ADC measurement low-byte result of the GPIO6.								

8.5.4.6.16 GPIO7_HI/LO

GPIO7_HI

Address	0x059A							
Read Only	Bit 7	Bit 6	Bit 5	Bit 4	Bit 3	Bit 2	Bit 1	Bit 0

Copyright © 2023 Texas Instruments Incorporated

Name	RESULT[7:0]							
Reset	1	0	0	0	0	0	0	0
RESULT[7:0] = The ADC measurement high-byte result of the GPIO7. When host reads this register, the device locks the GPIO7 low-byte from updating until the high-byte and low-byte registers are read.								

GPIO7_LO

Address	0x059B							
Read Only	Bit 7	Bit 6	Bit 5	Bit 4	Bit 3	Bit 2	Bit 1	Bit 0
Name	RESULT[7:0]							
Reset	0	0	0	0	0	0	0	0
RESULT[7:0] = The ADC measurement low-byte result of the GPIO7.								

8.5.4.6.17 GPIO8_HI/LO

GPIO8_HI

Address	0x059C							
Read Only	Bit 7	Bit 6	Bit 5	Bit 4	Bit 3	Bit 2	Bit 1	Bit 0
Name	RESULT[7:0]							
Reset	1	0	0	0	0	0	0	0
RESULT[7:0] = The ADC measurement high-byte result of the GPIO8. When host reads this register, the device locks the GPIO8 low-byte from updating until the high-byte and low-byte registers are read.								

GPIO8_LO

Address	0x059D							
Read Only	Bit 7	Bit 6	Bit 5	Bit 4	Bit 3	Bit 2	Bit 1	Bit 0
Name	RESULT[7:0]							
Reset	0	0	0	0	0	0	0	0
RESULT[7:0] = The ADC measurement low-byte result of the GPIO8.								

8.5.4.6.18 DIETEMP1_HI/LO

DIETEMP1_HI

Address	0x05AE							
Read Only	Bit 7	Bit 6	Bit 5	Bit 4	Bit 3	Bit 2	Bit 1	Bit 0
Name	RESULT[7:0]							
Reset	1	0	0	0	0	0	0	0
RESULT[7:0] = The DieTemp1 high-byte result from Main ADC. When host reads this register, the device locks the DIETEMP1 low-byte from updating until the high-byte and low-byte registers are read.								

DIETEMP1_LO

Address	0x05AF							
Read Only	Bit 7	Bit 6	Bit 5	Bit 4	Bit 3	Bit 2	Bit 1	Bit 0
Name	RESULT[7:0]							
Reset	0	0	0	0	0	0	0	0

Copyright © 2023 Texas Instruments Incorporated

RESULT[7:0] =	The DieTemp1 low-byte (temperature used for ADC correction) result from Main ADC.

8.5.4.6.19 DIETEMP2_HI/LO

DIETEMP2_HI

Address	0x05B0							
Read Only	**Bit 7**	**Bit 6**	**Bit 5**	**Bit 4**	**Bit 3**	**Bit 2**	**Bit 1**	**Bit 0**
Name	RESULT[7:0]							
Reset	1	0	0	0	0	0	0	0
RESULT[7:0] =	The DieTemp2 high-byte result from AUX ADC. When host reads this register, the device locks the DIETEMP2 low-byte from updating until the high-byte and low-byte registers are read.							

DIETEMP2_LO

Address	0x05B1							
Read Only	**Bit 7**	**Bit 6**	**Bit 5**	**Bit 4**	**Bit 3**	**Bit 2**	**Bit 1**	**Bit 0**
Name	RESULT[7:0]							
Reset	0	0	0	0	0	0	0	0
RESULT[7:0] =	The DieTemp2 low-byte (temperature used for ADC correction) result from AUX ADC							

8.5.4.6.20 AUX_CELL_HI/LO

AUX_CELL_HI

Address	0x05B2							
Read Only	**Bit 7**	**Bit 6**	**Bit 5**	**Bit 4**	**Bit 3**	**Bit 2**	**Bit 1**	**Bit 0**
Name	RESULT[7:0]							
Reset	1	0	0	0	0	0	0	0
RESULT[7:0] =	The ADC measurement result of the high-byte of the AUXCELL voltage in 2s complement. These *AUX_CELL_HI/LO* registers will only report AUXCELL voltage measurement if host configures *[AUX_CELL_SEL4:0]* to lock to a single AUXCELL channel. When host reads this register, the device locks the AUXCELL voltage low-byte from updating until the high-byte and low-byte registers are read.							

AUX_CELL_LO

Address	0x05B3							
Read Only	**Bit 7**	**Bit 6**	**Bit 5**	**Bit 4**	**Bit 3**	**Bit 2**	**Bit 1**	**Bit 0**
Name	RESULT[7:0]							
Reset	0	0	0	0	0	0	0	0
RESULT[7:0] =	The ADC measurement result of the low-byte of the AUX cell voltage in 2s complement. These *AUX_CELL_HI/LO* registers will only report AUXCELL voltage measurement if host configures *[AUX_CELL_SEL4:0]* to lock to a single AUXCELL channel.							

8.5.4.6.21 AUX_GPIO_HI/LO

AUX_GPIO_HI

Address	0x05B4							
Read Only	**Bit 7**	**Bit 6**	**Bit 5**	**Bit 4**	**Bit 3**	**Bit 2**	**Bit 1**	**Bit 0**
Name	RESULT[7:0]							

Copyright © 2023 Texas Instruments Incorporated

Reset	1	0	0	0	0	0	0	0
RESULT[7:0] =	The AUX ADC measurement high-byte result of the GPIO that is locked by the *[AUXGPIO_SEL3:0]* bits. When host reads this register, the device locks the AUX_GPIO low-byte from updating until the high-byte and low-byte registers are read.							

AUX_GPIO_LO

Address	**0x05B5**							
Read Only	**Bit 7**	**Bit 6**	**Bit 5**	**Bit 4**	**Bit 3**	**Bit 2**	**Bit 1**	**Bit 0**
Name	RESULT[7:0]							
Reset	0	0	0	0	0	0	0	0
RESULT[7:0] =	The AUX ADC measurement low-byte result of the GPIO that is locked by the *[AUXGPIO_SEL3:0]* bits.							

8.5.4.6.22 AUX_BAT_HI/LO

AUX_BAT_HI

Address	**0x05B6**							
Read Only	**Bit 7**	**Bit 6**	**Bit 5**	**Bit 4**	**Bit 3**	**Bit 2**	**Bit 1**	**Bit 0**
Name	RESULT[7:0]							
Reset	1	0	0	0	0	0	0	0
RESULT[7:0] =	The high-byte result of the BAT pin measurement from AUX ADC. When host reads this register, the device locks the AUX_BAT low-byte from updating until the high-byte and low-byte registers are read.							

AUX_BAT_LO

Address	**0x05B7**							
Read Only	**Bit 7**	**Bit 6**	**Bit 5**	**Bit 4**	**Bit 3**	**Bit 2**	**Bit 1**	**Bit 0**
Name	RESULT[7:0]							
Reset	0	0	0	0	0	0	0	0
RESULT[7:0] =	The low-byte result of the BAT pin measurement from AUX ADC.							

8.5.4.6.23 AUX_REFL_HI/LO

AUX_REFL_HI

Address	**0x05B8**							
Read Only	**Bit 7**	**Bit 6**	**Bit 5**	**Bit 4**	**Bit 3**	**Bit 2**	**Bit 1**	**Bit 0**
Name	RESULT[7:0]							
Reset	1	0	0	0	0	0	0	0
RESULT[7:0] =	The high-byte result of the internal reference, REFL, measurement from AUX ADC. When host reads this register, the device locks the AUX_REL low-byte from updating until the high-byte and low-byte registers are read.							

AUX_REFL_LO

Address	**0x05B9**							
Read Only	**Bit 7**	**Bit 6**	**Bit 5**	**Bit 4**	**Bit 3**	**Bit 2**	**Bit 1**	**Bit 0**
Name	RESULT[7:0]							
Reset	0	0	0	0	0	0	0	0
RESULT[7:0] =	The low-byte result of the internal reference, REFL, measurement from AUX ADC.							

Copyright © 2023 Texas Instruments Incorporated

8.5.4.6.24 AUX_VBG2_HI/LO

AUX_VBG2_HI

Address	0x05BA							
Read Only	Bit 7	Bit 6	Bit 5	Bit 4	Bit 3	Bit 2	Bit 1	Bit 0
Name	RESULT[7:0]							
Reset	1	0	0	0	0	0	0	0
RESULT[7:0] = The high-byte result of the internal reference, VBG2, measurement from AUX ADC. When host reads this register, the device locks the AUX_VBG2 low-byte from updating until the high-byte and low-byte registers are read.								

AUX_VBG2_LO

Address	0x05BB							
Read Only	Bit 7	Bit 6	Bit 5	Bit 4	Bit 3	Bit 2	Bit 1	Bit 0
Name	RESULT[7:0]							
Reset	0	0	0	0	0	0	0	0
RESULT[7:0] = The low-byte result of the internal reference, VBG2, measurement from AUX ADC.								

8.5.4.6.25 AUX_AVAO_REF_HI/LO

AUX_AVAO_REF_HI

Address	0x05BE							
Read Only	Bit 7	Bit 6	Bit 5	Bit 4	Bit 3	Bit 2	Bit 1	Bit 0
Name	RESULT[7:0]							
Reset	1	0	0	0	0	0	0	0
RESULT[7:0] = The high-byte result of the AVAO_REF measurement from AUX ADC. When host reads this register, the device locks the AUX_AVAO_REF low-byte from updating until the high-byte and low-byte registers are read.								

AUX_AVAO_REF_LO

Address	0x05BF							
Read Only	Bit 7	Bit 6	Bit 5	Bit 4	Bit 3	Bit 2	Bit 1	Bit 0
Name	RESULT[7:0]							
Reset	0	0	0	0	0	0	0	0
RESULT[7:0] = The low-byte result of the AVAO_REF measurement from AUX ADC.								

8.5.4.6.26 AUX_AVDD_REF_HI/LO

AUX_AVDD_REF_HI

Address	0x05C0							
Read Only	Bit 7	Bit 6	Bit 5	Bit 4	Bit 3	Bit 2	Bit 1	Bit 0
Name	RESULT[7:0]							
Reset	1	0	0	0	0	0	0	0
RESULT[7:0] = The high-byte result of the AVDD_REF measurement from AUX ADC. When host reads this register, the device locks the AUX_AVDD_REF low-byte from updating until the high-byte and low-byte registers are read.								

AUX_AVDD_REF_LO

Address	0x05C1							

Copyright © 2023 Texas Instruments Incorporated

Read Only	Bit 7	Bit 6	Bit 5	Bit 4	Bit 3	Bit 2	Bit 1	Bit 0
Name	RESULT[7:0]							
Reset	0	0	0	0	0	0	0	0
RESULT[7:0] = The low-byte result of the AVDD_REF measurement from AUX ADC.								

8.5.4.6.27 AUX_OV_DAC_HI/LO

AUX_OV_DAC_HI

Address	0x05C2							
Read Only	Bit 7	Bit 6	Bit 5	Bit 4	Bit 3	Bit 2	Bit 1	Bit 0
Name	RESULT[7:0]							
Reset	1	0	0	0	0	0	0	0
RESULT[7:0] = The high-byte result of the OV comparator DAC measurement, which is (0.8 x OV threshold), from AUX ADC. When host reads this register, the device locks the AUX_OV_DAC low-byte from updating until the high-byte and low-byte registers are read.								

AUX_OV_DAC_LO

Address	0x05C3							
Read Only	Bit 7	Bit 6	Bit 5	Bit 4	Bit 3	Bit 2	Bit 1	Bit 0
Name	RESULT[7:0]							
Reset	0	0	0	0	0	0	0	0
RESULT[7:0] = The low-byte result of the OV comparator DAC measurement, which is (0.8 x OV threshold), from AUX ADC.								

8.5.4.6.28 AUX_UV_DAC_HI/LO

AUX_UV_DAC_HI

Address	0x05C4							
Read Only	Bit 7	Bit 6	Bit 5	Bit 4	Bit 3	Bit 2	Bit 1	Bit 0
Name	RESULT[7:0]							
Reset	1	0	0	0	0	0	0	0
RESULT[7:0] = The high-byte result of the UV comparator DAC measurement, which is (0.8 x UV threshold), from AUX ADC. When host reads this register, the device locks the AUX_UV_DAC low-byte from updating until the high-byte and low-byte registers are read.								

AUX_UV_DAC_LO

Address	0x05C5							
Read Only	Bit 7	Bit 6	Bit 5	Bit 4	Bit 3	Bit 2	Bit 1	Bit 0
Name	RESULT[7:0]							
Reset	0	0	0	0	0	0	0	0
RESULT[7:0] = The low-byte result of the UV comparator DAC measurement, which is (0.8 x UV threshold), from AUX ADC.								

8.5.4.6.29 AUX_OT_OTCB_DAC_HI/LO

AUX_OT_OTCB_DAC_HI

Address	0x05C6							
Read Only	Bit 7	Bit 6	Bit 5	Bit 4	Bit 3	Bit 2	Bit 1	Bit 0
Name	RESULT[7:0]							
Reset	1	0	0	0	0	0	0	0

Copyright © 2023 Texas Instruments Incorporated

RESULT[7:0] =	The high-byte result of the OT comparator (either OT or OTCB threshold based on *[OTCB_THR_LOCK]* setting) DAC measurement from AUX ADC. When host reads this register, the device locks the AUX_OT_OTCB_DAC low-byte from updating until the high-byte and low-byte registers are read.

AUX_OT_OTCB_DAC_LO

Address	0x05C7							
Read Only	**Bit 7**	**Bit 6**	**Bit 5**	**Bit 4**	**Bit 3**	**Bit 2**	**Bit 1**	**Bit 0**
Name	RESULT[7:0]							
Reset	0	0	0	0	0	0	0	0
RESULT[7:0] =	The low-byte result of the OT comparator (either OT or OTCB threshold based on *[OTCB_THR_LOCK]* setting) DAC measurement from AUX ADC.							

8.5.4.6.30 AUX_UT_DAC_HI/LO

AUX_UT_DAC_HI

Address	0x05C8							
Read Only	**Bit 7**	**Bit 6**	**Bit 5**	**Bit 4**	**Bit 3**	**Bit 2**	**Bit 1**	**Bit 0**
Name	RESULT[7:0]							
Reset	1	0	0	0	0	0	0	0
RESULT[7:0] =	The high-byte result of the UT comparator DAC measurement from AUX ADC. When host reads this register, the device locks the AUX_UT_DAC low-byte from updating until the high-byte and low-byte registers are read.							

AUX_UT_DAC_LO

Address	0x05C9							
Read Only	**Bit 7**	**Bit 6**	**Bit 5**	**Bit 4**	**Bit 3**	**Bit 2**	**Bit 1**	**Bit 0**
Name	RESULT[7:0]							
Reset	0	0	0	0	0	0	0	0
RESULT[7:0] =	The low-byte result of the UT comparator DAC measurement from AUX ADC.							

8.5.4.6.31 AUX_VCBDONE_DAC_HI/LO

AUX_VCBDONE_DAC_HI

Address	0x05CA							
Read Only	**Bit 7**	**Bit 6**	**Bit 5**	**Bit 4**	**Bit 3**	**Bit 2**	**Bit 1**	**Bit 0**
Name	RESULT[7:0]							
Reset	1	0	0	0	0	0	0	0
RESULT[7:0] =	The high-byte result of the UV comparator (VCBDONE Threshold) DAC measurement from AUX ADC. When host reads this register, the device locks the AUX_VCBDONE_DAC low-byte from updating until the high-byte and low-byte registers are read.							

AUX_VCBDONE_DAC_LO

Address	0x05CB							
Read Only	**Bit 7**	**Bit 6**	**Bit 5**	**Bit 4**	**Bit 3**	**Bit 2**	**Bit 1**	**Bit 0**
Name	RESULT[7:0]							
Reset	0	0	0	0	0	0	0	0
RESULT[7:0] =	The low-byte result of the UV comparator (VCBDONE Threshold) DAC measurement from AUX ADC.							

8.5.4.6.32 AUX_VCM_HI/LO

AUX_VCM_HI

Address	0x05CC	Bit 6	Bit 5	Bit 4	Bit 3	Bit 2	Bit 1	Bit 0
Name	RESULT[7:0]							
Reset	1	0	0	0	0	0	0	0
RESULT[7:0] = The high-byte result of the VCM (common mode voltage on Main ADC) measurement from AUX ADC. When host reads this register, the device locks the AUX_VCM low-byte from updating until the high-byte and low-byte registers are read.								

AUX_VCM_LO

Address	0x05CD							
Read Only	Bit 7	Bit 6	Bit 5	Bit 4	Bit 3	Bit 2	Bit 1	Bit 0
Name	RESULT[7:0]							
Reset	0	0	0	0	0	0	0	0
RESULT[7:0] = The low-byte result of the VCM (common mode voltage on Main ADC) measurement from AUX ADC.								

8.5.4.6.33 REFOVDAC_HI/LO

REFOVDAC_HI

Address	0x05D0							
Read Only	Bit 7	Bit 6	Bit 5	Bit 4	Bit 3	Bit 2	Bit 1	Bit 0
Name	RESULT[7:0]							
Reset	1	0	0	0	0	0	0	0
RESULT[7:0] = The high-byte result of the recorded OVDAC reference voltage trimmed at factory.								

REFOVDAC_LO

Address	0x05D1							
Read Only	Bit 7	Bit 6	Bit 5	Bit 4	Bit 3	Bit 2	Bit 1	Bit 0
Name	RESULT[7:0]							
Reset	0	0	0	0	0	0	0	0
RESULT[7:0] = The low-byte result of the recorded OVDAC reference voltage trimmed at factory.								

8.5.4.6.34 DIAG_MAIN_HI/LO

DIAG_MAIN_HI

Address	0x05D2							
Read Only	Bit 7	Bit 6	Bit 5	Bit 4	Bit 3	Bit 2	Bit 1	Bit 0
Name	RESULT[7:0]							
Reset	1	0	0	0	0	0	0	0
RESULT[7:0] = The high-byte result of reported Main ADC comparison value used in the diagnostic ADC comparison. Valid if the diagnostic ADC comparison is run when a single channel is locked								

DIAG_MAIN_LO

Address	0x05D3							
Read Only	Bit 7	Bit 6	Bit 5	Bit 4	Bit 3	Bit 2	Bit 1	Bit 0
Name	RESULT[7:0]							
Reset	0	0	0	0	0	0	0	0
RESULT[7:0] = The low-byte result of reported Main ADC comparison value used in the diagnostic ADC comparison. Valid if the diagnostic ADC comparison is run when a single channel is locked								

Copyright © 2023 Texas Instruments Incorporated

8.5.4.6.35 DIAG_AUX_HI/LO

DIAG_AUX_HI

Address	0x05D4							
Read Only	Bit 7	Bit 6	Bit 5	Bit 4	Bit 3	Bit 2	Bit 1	Bit 0
Name	RESULT[7:0]							
Reset	1	0	0	0	0	0	0	0
RESULT[7:0] = The high-byte result of reported AUX ADC comparison value used in the diagnostic ADC comparison. Valid if the diagnostic ADC comparison is run when a single channel is locked								

DIAG_AUX_LO

Address	0x05D5							
Read Only	Bit 7	Bit 6	Bit 5	Bit 4	Bit 3	Bit 2	Bit 1	Bit 0
Name	RESULT[7:0]							
Reset	0	0	0	0	0	0	0	0
RESULT[7:0] = The low-byte result of reported AUX ADC comparison value used in the diagnostic ADC comparison. Valid if the diagnostic ADC comparison is run when a single channel is locked								

8.5.4.7 Balancing Configuration, Control and Status

8.5.4.7.1 CB_CELL6_CTRL through CB_CELL1_CTRL

Address	0x0322 to 0x0327							
RW	Bit 7	Bit 6	Bit 5	Bit 4	Bit 3	Bit 2	Bit 1	Bit 0
Name	RSVD			TIME[4:0]				
Reset	0	0	0	0	0	0	0	0
RSVD = Reserved								
TIME[4:0] = Sets the timer for cell* balancing. The selection is sampled whenever *[BAL_GO]* = 1 is set by the host MCU. 0x00 = 0 s = stop balancing 0x01 = 10 s 0x02 = 30 s 0x03 = 60 s 0x04 = 300 s 0x05 to 0x10 = range from 10 min to 120 min in 10-min steps 0x11 to 0x1F = range from 150 min to 540 min in 30-min steps and 600 min								

8.5.4.7.2 VCB_DONE_THRESH

Address	0x032A							
RW	Bit 7	Bit 6	Bit 5	Bit 4	Bit 3	Bit 2	Bit 1	Bit 0
Name	RSVD		CB_THR[5:0]					
Reset	0	0	0	0	0	0	0	0
RSVD = Reserved								
CB_THR[5:0] = If a cell voltage is less than this threshold, the cell balancing on that cell stops. This threshold setting applies to all cells. The selection is sampled whenever *[OVUV_GO]* = 1 is set by the host MCU. Note: To use the VCB_DONE detection feature, host sets this threshold, then issues *[OVUV_GO]* = 1 before starting CB (that is, sending *[BAL_GO]* = 1). To change the VCB_DONE threshold detection, set a new threshold then re-issue *[OVUV_GO]* = 1 for the new threshold to take effect. It is not necessary to re-issue *[BAL_GO]* = 1 to restart balancing in this case. Range from 2.45-V to 4-V with 25-mV steps, where 0x00 = Disables voltage based on CB_DONE comparison 0x01 = threshold of 2.45-V 0x3F = threshold of 4-V								

Copyright © 2023 Texas Instruments Incorporated

8.5.4.7.3 OTCB_THRESH

Address	0x032B							
RW	**Bit 7**	**Bit 6**	**Bit 5**	**Bit 4**	**Bit 3**	**Bit 2**	**Bit 1**	**Bit 0**
Name	RSVD	COOLOFF[2:0]			OTCB_THR[3:0]			
Reset	0	0	0	0	1	1	1	1

RSVD = Reserved

COOLOFF[2:0] = Sets the COOLOFF hysteresis (resume temperature = OTCB_THR - COOLOFF hysteresis) to resume CB when *BAL_CTRL1[OTCB_EN]* = 1 and OTCB is detected. The MCU configures the corresponding GPIO(s) to the ADC and OTUT option.
Range from 4% to 14% in steps of 2%.
Unused code is set to 14%.

OTCB_THR[3:0] = Sets the OTCB threshold when *BAL_CTRL1[OTCB_EN]* = 1. The MCU configures the corresponding GPIO(s) to the ADC and OTUT option.
Range from 10% to 24% in steps of 2%.
Unused code is set to 24%.

8.5.4.7.4 BAL_CTRL1

Address	0x032E							
RW	**Bit 7**	**Bit 6**	**Bit 5**	**Bit 4**	**Bit 3**	**Bit 2**	**Bit 1**	**Bit 0**
Name	RSVD					DUTY[2:0]		
Reset	0	0	0	0	0	0	0	0

RSVD = Reserved

DUTY[2:0] = Selection is sampled whenever *[BAL_GO]* = 1 is set by the host MCU.
0x0 = 5 s
0x1 = 10 s
0x2 = 30 s
0x3 = 60 s
0x4 = 5 min
0x5 = 10 min
0x6 = 20 min
0x7 = 30 min

8.5.4.7.5 BAL_CTRL2

Address	0x032F							
RW	**Bit 7**	**Bit 6**	**Bit 5**	**Bit 4**	**Bit 3**	**Bit 2**	**Bit 1**	**Bit 0**
Name	RSVD	CB_PAUSE	FLTSTOP_EN	OTCB_EN	BAL_ACT[1:0]		BAL_GO	AUTO_BAL
Reset	0	0	0	0	0	0	0	0

RSVD = Reserved

CB_PAUSE = Pauses cell balancing on all cells to allow diagnostics to run.
0 = Normal cell balancing operation
1 = Pause all cell balancing

FLTSTOP_EN = Stops cell balancing if unmasked fault occurs. The selection is sampled whenever *[BAL_GO]* = 1 is set by the host MCU.
0 = Balancing is continuous regardless of fault condition (excluding thermal shutdown)
1 = All CB balancing stops when any unmasked fault occurs

OTCB_EN = Enables the OTCB detection during cell balancing. The selection is sampled whenever *[BAL_GO]* = 1 is set by the host MCU.
0 = Disable OTCB detection
1 = Enable OTCB detection

BAL_ACT[1:0] = Controls the device action when the MB and CB are completed. These bits are samples whenever *[BAL_GO]* = 1 is set by the host MCU. The action is valid.
00 = No action
01 = Enters SLEEP
10 = Enters SHUTDOWN
11 = Reserved

Copyright © 2023 Texas Instruments Incorporated

BAL_GO =	Starts cell balancing. When written to 1, all balancing configuration registers are sampled. Any change to the configuration registers has no effect until this bit is written to 1 again. The bit is self-clearing. 0 = Ready 1 = Start balancing
AUTO_BAL =	Selects between auto or manual cell balance control. The selection is sampled whenever *[BAL_GO]* = 1 is set by the host MCU. 0 = Manual cell balancing 1 = Auto cell balancing

8.5.4.7.6 BAL_CTRL3

Address	**0x0330**							
RW	**Bit 7**	**Bit 6**	**Bit 5**	**Bit 4**	**Bit 3**	**Bit 2**	**Bit 1**	**Bit 0**
Name	RSVD			BAL_TIME_SEL[3:0]				BAL_TIME_GO
Reset	0	0	0	0	0	0	0	0
RSVD =	Reserved							
BAL_TIME_GO	Instruct the device to report the selected CB channel (set by *[BAL_TIME_SEL3:0]*) remaining balancing time to *BAL_TIME* register							
BAL_TIME_SEL[3:0] =	Select a single CB channel to report its remaining balancing time 0x0 = CB Channel 1 0x1 = CB Channel 2 : 0x5 = CB Channel 6; 0x6 - 0xF = RSVD							

8.5.4.7.7 CB_COMPLETE2

Address	**0x0557**							
Read Only	**Bit 7**	**Bit 6**	**Bit 5**	**Bit 4**	**Bit 3**	**Bit 2**	**Bit 1**	**Bit 0**
Name	RSVD	RSVD	CELL6_DONE	CELL5_DONE	CELL4_DONE	CELL3_DONE	CELL2_DONE	CELL1_DONE
Reset	0	0	0	0	0	0	0	0
CELL1_DONE to CELL_6DONE =	Cell balance completion for cell1 to cell.6 This register is cleared when MCU sets *[BAL_GO]* = 1. 0 = Balancing on the particular cell is still running or has not started 1 = Balancing completed on the particular cell							

8.5.4.7.8 BAL_TIME

Address	**0x0558**							
Read Only	**Bit 7**	**Bit 6**	**Bit 5**	**Bit 4**	**Bit 3**	**Bit 2**	**Bit 1**	**Bit 0**
Name	TIME_UNIT	TIME[6:0]						
Reset	0	0	0	0	0	0	0	0
TIME_UNIT =	Indicates the unit reported by*[TIME6:0]* 0 = sec 1 = min							
TIME[6:0] =	Report the selected CB channel remaining balancing time If *[TIME_UNIT]* = 0. Time report in sec with 5sec step If *[TIME_UNIT]* = 1. Time report in min with 5min step							

8.5.4.8 Protector Configuration and Control

8.5.4.8.1 OV_THRESH

Address	**0x0009**							
NVM	**Bit 7**	**Bit 6**	**Bit 5**	**Bit 4**	**Bit 3**	**Bit 2**	**Bit 1**	**Bit 0**
Name	SPARE	SPARE	OV_THR[5:0]					
Reset	0	0	1	1	1	1	1	1

Copyright © 2023 Texas Instruments Incorporated

SPARE =	Spare
OV_THR[5:0] =	Sets the overvoltage threshold for the OV comparator. Changes on these bits require host to send another *[OVUV_GO]* = 1 command. All settings are at 25-mV steps. 0x02 to 0x0E: range from 2700 mV to 3000 mV 0x12 to 0x1E: range from 3500 mV to 3800 mV 0x22 to 0x2E: range from 4175 mV to 4475 mV All other settings will default to 2700 mV.

8.5.4.8.2 UV_THRESH

Address	0x000A							
NVM	**Bit 7**	**Bit 6**	**Bit 5**	**Bit 4**	**Bit 3**	**Bit 2**	**Bit 1**	**Bit 0**
Name	SPARE	SPARE	UV_THR[5:0]					
Reset	0	0	0	0	0	0	0	0

SPARE =	Spare
UV_THR[5:0] =	Sets the undervoltage threshold for the UV comparator. Changes on these bits require host to send another *[OVUV_GO]* = 1 command. All settings are at 50-mV steps. 0x00 to 0x26: range from 1200 mV to 3100 mV All other settings will default to 3100 mV.

8.5.4.8.3 UV_DISABLE2

Address	0x000D							
NVM	**Bit 7**	**Bit 6**	**Bit 5**	**Bit 4**	**Bit 3**	**Bit 2**	**Bit 1**	**Bit 0**
Name	RSVD	RSVD	CELL6	CELL5	CELL4	CELL3	CELL2	CELL1
Reset	0	0	0	0	0	0	0	0

CELL 6to CELL1 =	Indicate which channels shall be excluded from UV and VCB_DONE detection 0 = UV and VCB_DONE monitoring apply to the channel 1 = UV and VCB_DOME monitoring are excluded from the channel

8.5.4.8.4 OTUT_THRESH

Address	0x000B							
NVM	**Bit 7**	**Bit 6**	**Bit 5**	**Bit 4**	**Bit 3**	**Bit 2**	**Bit 1**	**Bit 0**
Name	UT_THR[2:0]			OT_THR[4:0]				
Reset	1	1	1	0	0	0	0	0

UT_THR[2:0] =	Sets the UT threshold for the UT comparator. Changes on these bits require host to send another *[OTUT_GO]* = 1 command. The MCU configures the corresponding GPIO(s) to ADC and OTUT input. Range from 66% to 80% in steps of 2%
OT_THR[4:0] =	Sets the OT threshold for the OT comparator. Changes on these bits require host to send another *[OTUT_GO]* = 1 command. The MCU configures the corresponding GPIO(s) to ADC and OTUT input. Range from 10% to 39% in steps of 1% Unused code defaults to 39%.

8.5.4.8.5 OVUV_CTRL

Address	0x032C							
RW	**Bit 7**	**Bit 6**	**Bit 5**	**Bit 4**	**Bit 3**	**Bit 2**	**Bit 1**	**Bit 0**
Name	VCBDONE_THR_LOCK	OVUV_LOCK[3:0]				OVUV_GO	OVUV_MODE[1:0]	
Reset	0	0	0	0	0	0	0	0

Copyright © 2023 Texas Instruments Incorporated

VCBDONE_THR_LOCK =	As the UV comparator is switching between UV threshold and VCBDONE threshold to measure the UV DAC or the VCBDONE DAC result for diagnostics, the UV comparator has to lock onto only one threshold before starting the AUX ADC measurement. This bit selects which threshold is locked to the UV comparator. The bit is sampled when *OVUV_MODE[1:0]* is 0b11 which is locked to a single channel mode. 0 = UV threshold is selected 1 = VCBDONE threshold is selected
OVUV_LOCK[3:0] =	Configures a particular single channel as the OV and UV comparators input when *[OVUV_MOD1:0]* = 0b11. Changes on these bits require host to send another *[OVUV_GO]* = 1 command. 0x0 = Lock to Cell1 0x1 = Lock to Cell2 0x2 = Lock to Cell3 : 0x5 = Lock to Cell6; 0x6 - 0xF = RSVD
OVUV_GO =	Starts the OV and UV comparators. When written to 1, all OVUV configuration settings are sampled. This bit is self-clearing. 0 = Ready 1 = Start OV and UV comparators
OVUV_MODE[1:0] =	Sets the OV and UV comparators operation mode when *[OVUV_GO]* = 1. Changes on these bits require host to send another *[OVUV_GO]* = 1 command. 00 = Do not run OV and UV comparators 01 = Run the OV and UV round robin with all active cells 10 = Run the OV and UV BIST cycle. 11 = Lock OV and UV comparators to a single channel configured by *[OVUV_LOCK3:0]* Note: Active cells are defined by the *ACTIVE_CELL[NUM_CELL3:0]* register.

8.5.4.8.6 OTUT_CTRL

Address	**0x032D**							
RW	**Bit 7**	**Bit 6**	**Bit 5**	**Bit 4**	**Bit 3**	**Bit 2**	**Bit 1**	**Bit 0**
Name	RSVD	OTCB_THR_LOCK	OTUT_LOCK[2:0]			OTUT_GO	OTUT_MODE[1:0]	
Reset	0	0	0	0	0	0	0	0

RSVD =	Reserved
OTCB_THR_LOCK =	As the OT comparator is switching between OT threshold and OTCB threshold to measure the OT or OTCB DAC threshold result for diagnostics, the OT comparator has to lock onto only one threshold before starting the AUX ADC measurement. This bit selects which threshold is locked to the OT comparator. The bit is sampled when *OTUT_MODE[1:0]* = 0b11 which is locked to a single channel mode. 0 = OT threshold is selected 1 = OTCB threshold is selected
OTUT_LOCK[2:0] =	Configures a particular single channel as the OT and UT comparators input when *[OTUT_MOD1:0]* = 0b11. Changes on these bits require host to send another *[OTUT_GO]* = 1 command. 0x0 = Lock to GPIO1A 0x1 = Lock to GPIO2A : 0x7 = Lock to GPIO8A
OTUT_GO =	Starts the OT and UT comparators. When written to 1, all OTUT configuration settings are sampled. This bit is self-clearing. 0 = Ready 1 = Start OT and UT comparators
OTUT_MODE[1:0] =	Sets the OT and UT comparators operation mode when *[OTUT_GO]* = 1. Changes on these bits require host to send another *[OTUT_GO]* = 1 command. 00 = Do not run OT and UT comparators 01 = Run the OT and UT round robin with all active cells 10 = Run the OT and UT BIST cycle. 11 = Lock OT and UT comparators to a single channel configured by *[OTUT_LOCK3:0]*

8.5.4.9 GPIO Configuration

8.5.4.9.1 GPIO_CONF1

Address	**0x000E**							

Copyright © 2023 Texas Instruments Incorporated

NVM	Bit 7	Bit 6	Bit 5	Bit 4	Bit 3	Bit 2	Bit 1	Bit 0
Name	FAULT_IN_EN	SPI_EN	GPIO2[2:0]			GPIO1[2:0]		
Reset	0	0	0	0	0	0	0	0

FAULT_IN_EN = Enables GPIO8 as an active-low input to trigger the NFAULT pin when the input signal is low.
0 = No fault input function. GPIO8 is configured based on *[GPIO8_CONF2:0]* setting.
1 = GPIO8 is set as active-low input to trigger NFAULT pin, *[GPIO8_CONF2:0]* setting is ignored.

SPI_EN = Enables SPI controller on GPIO4, GPIO5 and GPIO6, GPIO7.
0 = SPI controller disabled.
1 = SPI controller enabled. Overwrite the *[GPIO4_CONF2:0]*, *[GPIO5_CONF2:0]*, *[GPIO6_CONF2:0]*, and *[GPIO7_CONF2:0]* settings.

GPIO2[2:0] = Configures GPIO2.
000 = As disabled, high-Z
001 = As ADC and OTUT inputs
010 = As ADC only input
011 = As digital input
100 = As output high
101 = As output low
110 = As ADC input and weak pull-up enabled
111 = As ADC input and weak pull-down enabled

GPIO1[2:0] = Configures GPIO1.
000 = As disabled, high-Z
001 = As ADC and OTUT inputs
010 = As ADC only input
011 = As digital input
100 = As output high
101 = As output low
110 = As ADC input and weak pull-up enabled
111 = As ADC input and weak pull-down enabled

8.5.4.9.2 GPIO_CONF2

Address	0x000F							
NVM	Bit 7	Bit 6	Bit 5	Bit 4	Bit 3	Bit 2	Bit 1	Bit 0
Name	SPARE	CS_RDY_EN	GPIO4[2:0]			GPIO3[2:0]		
Reset	0	0	0	0	0	0	0	0

SPARE = Spare

CS_RDY_EN = Enables GPIO1 as digital output to toggle low when CS ADC conversion is complete. Reset to high when host reads CURRENT_HI register.
0 = No CS ADC toggle function. GPIO1 is configured based on [GPIO1_CONF2:0] setting.
1 = GPIO1 is used for CS ADC conversion toggle function, [GPIO1_CONF2:0] setting is ignored.

GPIO4[2:0] = Configures GPIO4. If *[SPI_EN]* = 1, these configuration bits are ignored and the pin is used as SS for SPI controller. See Section 8.3.6.1.3 for details.
000 = As disabled, high-Z
001 = As ADC and OTUT inputs
010 = As ADC only input
011 = As digital input
100 = As output high
101 = As output low
110 = As ADC input and weak pull-up enabled
111 = As ADC input and weak pull-down enabled

GPIO3[2:0] = Configures GPIO3.
000 = As disabled, high-Z
001 = As ADC and OTUT inputs
010 = As ADC only input
011 = As digital input
100 = As output high
101 = As output low
110 = As ADC input and weak pull-up enabled
111 = As ADC input and weak pull-down enabled

Copyright © 2023 Texas Instruments Incorporated

8.5.4.9.3 GPIO_CONF3

Address	0x0010							
NVM	Bit 7	Bit 6	Bit 5	Bit 4	Bit 3	Bit 2	Bit 1	Bit 0
Name	SPARE[1:0]		GPIO6[2:0]			GPIO5[2:0]		
Reset	0	0	0	0	0	0	0	0

SPARE[1:0] = Spare

GPIO6[2:0] = Configures GPIO6. If *[SPI_EN]* = 1, these configuration bits are ignored and the pin is used as MOSI for SPI controller. See Section 8.3.6.1.3 for details.
000 = As disabled, high-Z
001 = As ADC and OTUT inputs
010 = As ADC only input
011 = As digital input
100 = As output high
101 = As output low
110 = As ADC input and weak pull-up enabled
111 = As ADC input and weak pull-down enabled

GPIO5[2:0] = Configures GPIO5. If *[SPI_EN]* = 1, these configuration bits are ignored and the pin is used as MISO for SPI controller. See Section 8.3.6.1.3 for details.
000 = As disabled, high-Z
001 = As ADC and OTUT inputs
010 = As ADC only input
011 = As digital input
100 = As output high
101 = As output low
110 = As ADC input and weak pull-up enabled
111 = As ADC input and weak pull-down enabled

8.5.4.9.4 GPIO_CONF4

Address	0x0011							
NVM	Bit 7	Bit 6	Bit 5	Bit 4	Bit 3	Bit 2	Bit 1	Bit 0
Name	SPARE[1:0]		GPIO8[2:0]			GPIO7[2:0]		
Reset	0	0	0	0	0	0	0	0

SPARE[1:0] = Spare

GPIO8[2:0] = Configures GPIO8. If *[FAULT_IN_EN]* = 1, these configuration bits are ignored and the pin is used as an input such that an active low will trigger NFAULT.
000 = As disabled, high-Z
001 = As ADC and OTUT inputs
010 = As ADC only input
011 = As digital input
100 = As output high
101 = As output low
110 = As ADC input and weak pull-up enabled
111 = As ADC input and weak pull-down enabled

GPIO7[2:0] = Configures GPIO7. If *[SPI_EN]* = 1, these configuration bits are ignored and the pin is used as SCLK for SPI controller. See Section 8.3.6.1.3 for details.
000 = As disabled, high-Z
001 = As ADC and OTUT inputs
010 = As ADC only input
011 = As digital input
100 = As output high
101 = As output low
110 = As ADC input and weak pull-up enabled
111 = As ADC input and weak pull-down enabled

8.5.4.10 SPI Controller

8.5.4.10.1 SPI_CONF

Address	0x034D							
RW	Bit 7	Bit 6	Bit 5	Bit 4	Bit 3	Bit 2	Bit 1	Bit 0

Copyright © 2023 Texas Instruments Incorporated

Name	RSVD	CPOL	CPHA	NUMBIT[4:0]				
Reset	0	0	0	0	0	0	0	0
RSVD =	Reserved							
CPOL =	Sets the SCLK polarity. 0 = Idles low and clocks high 1 = Idles high and clocks low							
CPHA =	Sets the edge of SCLK where data is sampled on MISO. 0 = Leading clock transition 1 = Trailing clock transition							
NUMBIT[4:0] =	SPI transaction length. Set the number of SPI bits to read/write. 00000 = 24-bit 00001 = 1-bit 00010 = 2-bit : 10111 = 23-bit All others = 23-bit							

8.5.4.10.2 SPI_EXE

Address	**0x0351**							
RW	**Bit 7**	**Bit 6**	**Bit 5**	**Bit 4**	**Bit 3**	**Bit 2**	**Bit 1**	**Bit 0**
Name	RSVD						SS_CTRL	SPI_GO
Reset	0	0	0	0	0	0	1	0
RSVD =	Reserved							
SS_CTRL =	Programs the state of SS. 0 = Output low 1 = Output high							
SPI_GO =	Executes the SPI transaction. This bit is self-clearing. 0 = Idle 1 = Execute the SPI							

8.5.4.10.3 SPI_TX3, SPI_TX2, and SPI_TX1

Address	**0x034E to 0x0350**							
RW	**Bit 7**	**Bit 6**	**Bit 5**	**Bit 4**	**Bit 3**	**Bit 2**	**Bit 1**	**Bit 0**
Name	DATA[7:0]							
Reset	0	0	0	0	0	0	0	0
DATA[7:0] =	Data to be used to write to SPI peripheral device. The bits are programmed by using *SPI_CONF[NUMBIT4:0]* and are clocked out of MOSI starting from the LSB *SPI_TX1* -> LSB *SPI_TX2* -> LSB *SPI_TX3*.							

8.5.4.10.4 SPI_RX3, SPI_RX2, and SPI_RX1

Address	**0x0520 to 0x522**							
Read Only	**Bit 7**	**Bit 6**	**Bit 5**	**Bit 4**	**Bit 3**	**Bit 2**	**Bit 1**	**Bit 0**
Name	DATA[7:0]							
Reset	0	0	0	0	0	0	0	0
	R	R	R	R	R	R	R	R
DATA[7:0] =	Data returned from a read during SPI transaction. Updated, starting with LSB *SPI_RX1* -> LSB *SPI_RX2* -> LSB *SPI_RX3*, with the number of bits set by *SPI_CONF[NUMBIT4:0]* clocked in from MISO.							

8.5.4.11 Diagnostic Control

8.5.4.11.1 DIAG_OTP_CTRL

Address	**0x0335**							

Copyright © 2023 Texas Instruments Incorporated

RW	Bit 7	Bit 6	Bit 5	Bit 4	Bit 3	Bit 2	Bit 1	Bit 0
Name	RSVD			FLIP_FACT_CRC	MARGIN_MODE[2:0]			MARGIN_GO
Reset	0	0	0	0	0	0	0	0

RSVD = Reserved

FLIP_FACT_CRC = An enable bit to flip the factory CRC value. This is for factory CRC diagnostic.
0 = Normal operation. No modification of the factory CRC
1 = Flip the CRC value. This causes a factory CRC fault, *FAULT_OTP[FACT_CRC]*.

MARGIN_MODE[2:0] = Configures OTP Margin read mode:
0b000 = Normal Read
0b001 = Reserved
0b010 = Margin 1 Read
0b011 to 0b111 = Reserved

MARGIN_GO = Starts OTP Margin test set by the *[MARGIN_MOD]* bit. This bit self-clears and always reads 0.
0 = Ready
1 = Start the test

8.5.4.11.2 DIAG_COMM_CTRL

Address	0x0336							
RW	Bit 7	Bit 6	Bit 5	Bit 4	Bit 3	Bit 2	Bit 1	Bit 0
Name	RSVD						SPI_LOOPBACK	FLIP_TR_CRC
Reset	0	0	0	0	0	0	0	0

RSVD = Reserved

SPI_LOOPBACK = Enables SPI loopback function to verify SPI functionality. See the Section 8.3.6.1.3 for more details.
0 = Disable
1 = Enable

FLIP_TR_CRC = Sends a purposely incorrect communication (during transmitting response) CRC by inverting all of the calculated CRC bits.
0 = Send CRC as calculated
1 = Send inverted CRC

8.5.4.11.3 DIAG_PWR_CTRL

Address	0x0337							
RW	Bit 7	Bit 6	Bit 5	Bit 4	Bit 3	Bit 2	Bit 1	Bit 0
Name	RSVD						BIST_NO_RST	PWR_BIST_GO
Reset	0	0	0	0	0	0	0	0

RSVD = Reserved

BIST_NO_RST = Use for further diagnostic if the power supply BIST detects a failure. When this bit is set to 1, and then BIST cycle is run using *[PWR_BIST_GO]*, the device will not clear the *FAULT_PWR1* and *FAULT_PWR2* register, and does not deassert the NFAULT signal at the end of BIST cycle.
0 = Cycle through BIST on the LDO comparators. The *FAULT_PWR** registers are reset to 0 and NFAULT is deasserted at the end of each LDO BIST run.
1 = Cycle through BIST on the LDO comparators. The *FAULT_PWR** registers are not reset to 0, and NFAULT remains asserted at the end of each LDO BIST run.

PWR_BIST_GO = When written to 1, the power supply BIST diagnostic will start. Any change in *[BIST_NO_RST]* has no effect until this bit is written to 1 again. The bit self-clears.
0 = Ready
1 = Start power supply BIST diagnostic.

8.5.4.11.4 DIAG_CBFET_CTRL2

Address	0x0339							
RW	Bit 7	Bit 6	Bit 5	Bit 4	Bit 3	Bit 2	Bit 1	Bit 0
Name	CBFET6 to CBFET1							

Copyright © 2023 Texas Instruments Incorporated

Reset	0	0	0	0	0	0	0	0
CBFET 6to CBFET1 =	Enables CBFET for CBFET diagnostic. This register is only sampled when *[COMP_ADC_SEL2:0]* = 0b100. 0 = CBFET off 1 = CBFET on; Bit 7 and Bit 6 RSVD							

8.5.4.11.5 DIAG_COMP_CTRL1

Address	**0x033A**							
RW	**Bit 7**	**Bit 6**	**Bit 5**	**Bit 4**	**Bit 3**	**Bit 2**	**Bit 1**	**Bit 0**
Name	VCCB_THR[4:0]							
Reset	0	0	0	0	0	0	0	0
VCCB_THR[4:0] =	Configures the VCELL vs. AUXCELL delta. The VCELL vs. AUXCELL check is considered pass if the measured delta is less than this threshold. This threshold applies to the bus bar comparison from Main to AUX ADC as well. Range from 6 to 99mV in 3mV step							

8.5.4.11.6 DIAG_COMP_CTRL2

Address	**0x033B**							
RW	**Bit 7**	**Bit 6**	**Bit 5**	**Bit 4**	**Bit 3**	**Bit 2**	**Bit 1**	**Bit 0**
Name	RSVD	GPIO_THR[2:0]			OW_THR[3:0]			
Reset	0	0	0	0	0	0	0	0
RSVD =	Reserved							
GPIO_THR[2:0] =	Configures the GPIO comparison delta threshold between Main and AUX ADC measurements. Range is from 4-mV to 32-mV in 4-mV steps							
OW_THR[3:0] =	Configures the OW detection threshold for diagnostic comparison. This threshold applies to the CB OW and VC OW diagnostics. Range is from 500 mV to 5 V in 300-mV steps.							

8.5.4.11.7 DIAG_COMP_CTRL3

Address	**0x033C**							
RW	**Bit 7**	**Bit 6**	**Bit 5**	**Bit 4**	**Bit 3**	**Bit 2**	**Bit 1**	**Bit 0**
Name	RSVD	CBFET_CTRL_GO	OW_SNK[1:0]		COMP_ADC_SEL[2:0]			COMP_ADC_GO
Reset	0	0	0	0	0	0	0	0
RSVD =	Reserved							
CBFET_CTRL_GO =	When this GO bit = 1, device turns on the CBFET configured and turns off whichever CBFET is clear in DIAG_CBFET_CTRL2 register. This GO action is executed only if CB is not running or it's in pause, otherwise, CBFETs are controlled by regular CB control. If CBFET are turned on by this GO bit, once CB is started or resume, the CBFET controls returns to the regular CB control (and not by this GO bit action)							
OW_SNK[1:0] =	Turns on current sink on VC pins, CB pins. Changes to these bits take effect immediately. Host MCU is responsible to turn on the correct sink current before performing open wire (OW) test and to turn off the sink current after OW test is completed. 00 = All VC, , CB pins current sink is off. SRP/N current source is off 01 = Turn on current sink on all VC pins 10 = Turn on current sink on all CB pins 11 = Turn on current source on SRP/N pins							

Copyright © 2023 Texas Instruments Incorporated

COMP_ADC_SEL[2:0] =	Enables the device diagnostic comparison through the ADC measurements. Host enables the corresponding ADCs in continuous mode before enabling this diagnostic. These bits are sampled when *[COMP_ADC_GO]* = 1. 000 = No ADC comparison is performed 001 = Cell voltage measurement check. Device compares the cell channels specified by *[AUX_CELL_SEL4:0]* against the following criteria: VCELL (from Main ADC) vs. AUXCELL (from AUX ADC) delta is less than *[VCCB_THR4:0].* The *[DRDY_VCCB]* = 1 when this comparison is completed. 010 = Open wire (OW) check on VC pins. MCU enables the current sink on all VC pins through the *[OW_SNK1:0]* before enabling this comparison. Device compares corresponding VC pins specified by *ACTIVE_CELL* register against the following criteria: VCELL (from Main ADC) is less than *DIAG_COMP_CTRL2 [OW_THR3:0]*. The *[DRDY_VC_OW]* = 1 when the comparison is completed. 011 = Open wire (OW) check on CB pins MCU enables the current sink on all VC pins through the *[OW_SNK1:0]* before enabling this comparison. Device compares corresponding CB pins specified by *[AUX_CELL_SEL4:0]* against the following criteria: AUXCELL (from AUX ADC) is less than *DIAG_COMP_CTRL2 [OW_THR3:0]*. The *[DRDY_CBOW]* = 1 when the comparison is completed. 100 = CBFET check. MCU preconfigures the following before starting this check: • Pause cell balancing if balancing is enabled. • Enable the CBFET configured by *DIAG_CBFET_CTRL2* register. • Configure the *[EXTD_CBFET]* to decide if all CBFET returns to pause state (that is, turn off all CBFET) or remains their status as specified by *DIAG_CBFET_CTRL2* register. When this test starts, device will turn on CBFET specified by *DIAG_CBFET_CTRL2* register and then compares the channel specified by *[AUX_CELL_SEL4:0]* with the following criteria: AUXCELL (from AUX ADC) < 1/3 of VCELL (from Main ADC). *[DRDY_CBFET]* = 1 when the comparison is completed. 101 = GPIO measurement check (applies to GPIO configured as ADC and OTUT inputs or ADC only input). Device compares main GPIO measurement vs. AUX GPIO measurements delta is less than *[GPIO_THR2:0]*. The *[DRDY_GPIO]* = 1 when the comparison is completed. Other codes: No ADC comparison is performed
COMP_ADC_GO =	Device starts diagnostic test specified by *[COMP_ADC_SEL2:0]* setting. When this bit is written to 1, the selected *[COMP_ADC_SEL2:0]* is sampled. Change of *[COMP_ADC_SEL2:0]* setting has no effect unless this GO bit is written to 1 again. This bit is cleared to 0 in read. 0 = Ready. Writing 0 has no effect 1 = Star diagnostic selected by *[COMP_ADC_SEL2:0]*

8.5.4.11.8 DIAG_COMP_CTRL4

Address	**0x033D**							
RW	**Bit 7**	**Bit 6**	**Bit 5**	**Bit 4**	**Bit 3**	**Bit 2**	**Bit 1**	**Bit 0**
Name	RSVD						COMP_FAULT_INJ	LPF_FAULT_INJ
Reset	0	0	0	0	0	0	0	0

RSVD =	Reserved
COMP_FAULT_INJ =	Injects fault to the ADC comparison logic. If any ADC comparison diagnostic is run with this bit set, the comparison result is expected to fail. 0 = Disable 1 = Enable
LPF_FAULT_INJ =	Injects fault condition to the diagnostic LPF during LPF diagnostic. The *FAULT_COMP_MISC[LPF_FAIL]* is expected to be set. 0 = Disable 1 = Enable

8.5.4.11.9 DIAG_PROT_CTRL

Address	**0x033E**							
RW	**Bit 7**	**Bit 6**	**Bit 5**	**Bit 4**	**Bit 3**	**Bit 2**	**Bit 1**	**Bit 0**
Name	RSVD							PROT_BIST_NO_RST

Copyright © 2023 Texas Instruments Incorporated

Reset	0	0	0	0	0	0	0	0

RSVD = Reserved

PROT_BIST_NO_RST = Use for further diagnostic if the protector BIST detects a failure. When this bit is set to 1, the device will not clear the *FAULT_OV2*, *AULT_UV2*, *FAULT_OT*, and *FAULT_UT* registers. The NFAULT signal will be latched once it is asserted.
Note: Host ensures there is no fault before starting the BIST run with this bit set to 0.
0 = During BIST run, when the device asserts a fault to check the protector comparators and MUX and asserts the correct OV, UV, OT, and UT fault bits the NFAULT pin. When this bit is 0, the device clears the fault and deasserts NFAULT before switching to the next channel.
1 = During BIST run, the fault created during the test will not be cleared before switching to next cell or GPIO channel. The NFAULT pin is latched once it is asserted.

8.5.4.12 Fault Configuration and Reset

8.5.4.12.1 FAULT_MSK1

Address	**0x0016**							
NVM	**Bit 7**	**Bit 6**	**Bit 5**	**Bit 4**	**Bit 3**	**Bit 2**	**Bit 1**	**Bit 0**
Name	MSK_PROT	MSK_UT	MSK_OT	MSK_UV	MSK_OV	MSK_COMP	MSK_SYS	MSK_PWR
Reset	0	0	0	0	0	0	0	0

MSK_PROT = Masks the *FAULT_PROT** registers to trigger NFAULT.
0 = Assert NFAULT if any bit from *FAULT_PROT** is set to 1.
1 = No NFAULT action regardless of *FAULT_PROT** bit status.

MSK_UT = Masks the *FAULT_UT** registers to trigger NFAULT.
0 = Assert NFAULT if any bit from *FAULT_UT** is set to 1.
1 = No NFAULT action regardless of *FAULT_UT** bit status.

MSK_OT = Masks the *FAULT_OT** registers to trigger NFAULT.
0 = Assert NFAULT if any bit from *FAULT_OT** is set to 1.
1 = No NFAULT action regardless of *FAULT_OT** bit status.

MSK_UV = Masks the *FAULT_UV** registers to trigger NFAULT.
0 = Assert NFAULT if any bit from *FAULT_UV** is set to 1.
1 = No NFAULT action regardless of *FAULT_UV** bit status.

MSK_OV = Masks the *FAULT_OV** registers to trigger NFAULT.
0 = Assert NFAULT if any bit from *FAULT_OV** is set to 1.
1 = No NFAULT action regardless of *FAULT_OV** bit status.

MSK_COMP = Masks the *FAULT_COMP_** registers to trigger NFAULT.
0 = Assert NFAULT if any bit from *FAULT_COMP_** is set to 1.
1 = No NFAULT action regardless of *FAULT_COM_** bit status.

MSK_SYS = To mask the NFAULT assertion from any *FAULT_SYS* register bit.
0 = Assert NFAULT if any bit from *FAULT_SYS* is set to 1.
1 = No NFAULT action regardless of *FAULT_SYS* bit status.

MSK_PWR = To mask the NFAULT assertion from any *FAULT_PWR1* to *FAULT_PWR3* register bit.
0 = Assert NFAULT if any bit from *FAULT_PWR1* to *FAULT_PWR3* is set to 1.
1 = No NFAULT action regardless of *FAULT_PWR1* to *FAULT_PWR3* bit status.

8.5.4.12.2 FAULT_MSK2

Address	**0x0017**							
NVM	**Bit 7**	**Bit 6**	**Bit 5**	**Bit 4**	**Bit 3**	**Bit 2**	**Bit 1**	**Bit 0**
Name	SPARE[1]	MSK_OTP_CRC	MSK_OTP_DATA	RSVD	RSVD	RSVD	RSVD	MSK_COMM1
Reset	0	0	0	0	0	0	0	0

SPARE[1] = Spare

MSK_OTP_CRC = Masks the *FAULT_OTP* register (*[CUST_CRC]* and *[FACT_CRC]* only) on NFAULT triggering.
0 = Assert NFAULT if any bit described above is set to 1.
1 = No NFAULT action regardless of the status of the bits described above.

MSK_OTP_DATA = Masks the *FAULT_OTP* register (all bits except *[CUST_CRC]* and *[FACT_CRC]*) on NFAULT triggering.
0 = Assert NFAULT if any bit described above is set to 1.
1 = No NFAULT action regardless of the status of the bits described above.

Copyright © 2023 Texas Instruments Incorporated

RSVD =	Reserved
RSVD =	Reserved
RSVD =	Reserved
RSVD =	Reserved
MSK_COMM1 =	Masks *FAULT_COMM1* register on NFAULT triggering. 0 = Assert NFAULT if any bit from *FAULT_COMM1* register is set to 1. 1 = No NFAULT action regardless of *FAULT_COMM1* register bit status.

8.5.4.12.3 FAULT_RST1

Address	**0x0331**							
RW	**Bit 7**	**Bit 6**	**Bit 5**	**Bit 4**	**Bit 3**	**Bit 2**	**Bit 1**	**Bit 0**
Name	RST_PROT	RST_UT	RST_OT	RST_UV	RST_OV	RST_COMP	RST_SYS	RST_PWR
Reset	0	0	0	0	0	0	0	0

RST_PROT =	Resets the *FAULT_PROT1* and *FAULT_PROT2* registers to 0x00. 0 = No reset 1 = Reset registers to 0x00
RST_UT =	Resets all *FAULT_UT* registers to 0x00. 0 = No reset 1 = Reset registers to 0x00
RST_OT =	Resets all *FAULT_OT* registers to 0x00. 0 = No reset 1 = Reset registers to 0x00
RST_UV =	Resets all *FAULT_UV** registers to 0x00. 0 = No reset 1 = Reset registers to 0x00
RST_OV =	Resets all *FAULT_OV** registers to 0x00. 0 = No reset 1 = Reset registers to 0x00
RST_COMP =	Resets all *FAULT_COMP_** registers to 0x00. 0 = No reset 1 = Reset registers to 0x00
RST_SYS =	To reset the *FAULT_SYS* register to 0x00. This bit self-clears to 0 after writing to 1. 0 = Do not reset 1 = Reset to 0x00
RST_PWR =	To reset the *FAULT_PWR1* to *FAULT_PWR3* registers to 0x00. This bit self-clears to 0 after writing to 1. 0 = Do not reset 1 = Reset to 0x00

8.5.4.12.4 FAULT_RST2

Address	**0x0332**							
RW	**Bit 7**	**Bit 6**	**Bit 5**	**Bit 4**	**Bit 3**	**Bit 2**	**Bit 1**	**Bit 0**
Name	RSVD	RST_OTP_CRC	RST_OTP_DATA	RSVD	RSVD	RSVD	RSVD	RST_COMM1
Reset	0	0	0	0	0	0	0	0

RSVD =	Reserved
RST_OTP_CRC =	Resets the *FAULT_OTP* register (*[CUST_CRC]* and *[FACT_CRC]* only). 0 = No reset 1 = Reset the register to 0x00
RST_OTP_DATA =	Resets the *FAULT_OTP* register (*[SEC_DETECT]* and *[DED_DETECT]* only). 0 = No reset 1 = Reset the register to 0x00
RSVD=	Reserved
RSVD=	Reserved
RSVD=	Reserved

Copyright © 2023 Texas Instruments Incorporated

RSVD=	Reserved
RST_COMM1 =	Resets *FAULT_COMM1* and *DEBUG_COMM_UART** registers. 0 = No reset 1 = Reset registers to 0x00

8.5.4.13 Fault Status

8.5.4.13.1 FAULT_SUMMARY

This register is the soft version of the NFAULT.

Address	**0x052D**							
Read Only	**Bit 7**	**Bit 6**	**Bit 5**	**Bit 4**	**Bit 3**	**Bit 2**	**Bit 1**	**Bit 0**
Name	FAULT_PROT	FAULT_COMP_ADC	FAULT_OTP	FAULT_COMM	FAULT_OTUT	FAULT_OVUV	FAULT_SYS	FAULT_PWR
Reset	0	0	0	0	0	0	0	0

FAULT_PROT =	This bit is set if *[MSK_PROT]* = 0 and any of the *FAULT_PROT1* or *FAULT_PROT2* register bits is set. 0 = No protector (OVUV, OTUT comparators) fault. 1 = Protector fault is detected
FAULT_COMP_ADC =	This bit is set if *[MSK_COMP]* = 1 and any of the following registers is set: • *FAULT_COMP_VCCB2* • *FAULT_COMP_VCOW2* • *FAULT_COMP_CBOW2* • *FAULT_COMP_CBFET2* • *FAULT_COMP_GPIO* • *FAULT_COMP_MISC* 0 = No ADC comparison fault (that is, none of the *FAULT_COMP_** registers are set). 1 = ADC comparison fault is detected.
FAULT_OTP =	This bit is set if *[MSK_OTP]* = 0 and any of the *FAULT_OTP* register bits is set. 0 = No OTP-related fault detected or OTP faults are masked. 1 = OTP-related fault is detected.
FAULT_COMM =	This bit is set if any of the following is true: • *[MSK_COMM1]* = 0 and any of the *FAULT_COMM1* register bits is set. 0 = No UART fault is detected, or UART fault is masked. 1 = UART fault is detected.
FAULT_OTUT =	This bit is set if any of the following is true: • *[MSK_OT]* = 0 and any of the *FAULT_OT2* bits is set. • *[MSK_UT]* = 0 and any of the *FAULT_UT2* bits is set. 0 = No OT or UT fault is detected, or OT and UT faults are masked. 1 = OT or UT fault is detected
FAULT_OVUV =	This bit is set if any of the following is true: • *[MSK_OV]* = 0 and any of the *FAULT_OV1* or *FAULT_OV2* bits is set. • *[MSK_UV]* = 0 and any of the *FAULT_UV1* or *FAULT_UV2* bits is set. 0 = No OV or UV fault is detected, or OV and UV faults are masked. 1 = OV or UV fault is detected.
FAULT_SYS =	This bit is set if *[MSK_SYS]* = 0 and any of the *FAULT_SYS* register bits is set. 0 = No system related fault detected or system faults are masked. 1 = System related fault is detected.
FAULT_PWR =	This bit is set if *[MSK_PWR]* = 0 and any of the *FAULT_PWR1* to *FAULT_PWR3* register bits is set. 0 = No power rail related fault is detected or power rail faults are masked. 1 = Power rail related fault is detected.

8.5.4.13.2 FAULT_COMM1

Address	**0x0530**							

Copyright © 2023 Texas Instruments Incorporated

Read Only	Bit 7	Bit 6	Bit 5	Bit 4	Bit 3	Bit 2	Bit 1	Bit 0
Name	RSVD			UART_TR	UART_RR	UART_RC	COMMCLR_DET	STOP_DET
Reset	0	0	0	0	0	0	0	0

RSVD = Reserved

UART_TR = Indicates a UART FAULT is detected when transmitting a response frame. Further details of the fault information are available in the *DEBUG_UART_RR_TR* register.
0 = No fault
1 = Fault

UART_RR = Indicates a UART FAULT is detected when receiving a response frame. Further details of the fault information are available in the *DEBUG_UART_RR_TR* register.
0 = No fault
1 = Fault

UART_RC = Indicates a UART FAULT is detected during receiving a command frame. Further details of the fault information are available in the *DEBUG_UART_RC* register.
0 = No fault
1 = Fault

COMMCLR_DET = A UART communication clear signal is detected. A detection of SLEEPtoACTIVE ping in ACTIVE or SLEEP mode or detection of WAKE pin in ACTIVE mode will also set this bit.
0 = No UART Clear
1 = UART Clear detected

STOP_DET = Indicates an unexpected STOP condition is received. A detection of SLEEPtoACTIVE signal in ACTIVE mode will also set this bit.
0 = No fault
1 = Fault

8.5.4.13.3 FAULT_OTP

Address	0x0535							
Read Only	Bit 7	Bit 6	Bit 5	Bit 4	Bit 3	Bit 2	Bit 1	Bit 0
Name	RSVD	DED_DET	SEC_DET	CUST_CRC	FACT_CRC	CUSTLDERR	FACTLDERR	GBLOVERR
Reset	0	0	0	0	0	0	0	0

RSVD = Reserved

DED_DET = Indicates a DED error has occurred during the OTP load. (Unknown during encoding)
0 = No fault
1 = Fault

SEC_DET = Indicates a SEC error has occurred during the OTP load. (Unknown during encoding)
0 = No fault
1 = Fault

CUST_CRC = Indicates a CRC error has occurred in the customer register space.
0 = No fault
1 = Fault

FACT_CRC = Indicates a CRC error has occurred in the factory register space.
0 = No fault
1 = Fault

CUSTLDERR = Indicates errors during the customer space OTP load process. Read *OTP_CUST1_STAT* and *OTP_CUST2_STAT* registers for the specific error condition. This error bit is set if one of the following is true:

- No Customer OTP page is programmed.
- The highest Customer OTP page has a *[FMTERR]*.
- The highest Customer OTP page has *[TRY]* = 1 and is not *[PROGOK]*.
- LOADERR happened on the selected Customer OTP page.

Information received from the device with this error must not be considered reliable.
Writing *[RST_OTP_DATA]* = 1 does not reset this bit. To recheck this error, a device reset or HW_RESET is needed.
0 = No fault
1 = Fault

Copyright © 2023 Texas Instruments Incorporated

FACTLDERR =	Indicates errors during the factory space OTP load process. This error bit is set if one of the following is true: • No factory OTP page is programmed. • The highest factory OTP page has a *[FMTERR]*. • The highest factory OTP page has *[TRY]* = 1 and is not *[PROGOK]*. • LOADERR happened on the selected factory OTP page. Information received from the device with this error must not be considered reliable. Writing *[RST_OTP_DATA]* = 1 does not reset this bit. To recheck this error, a device reset or HW_RESET is needed. 0 = No fault 1 = Fault
GBLOVERR =	Indicates that on overvoltage error is detected on one of the OTP pages. Read *OTP_CUST1_STAT* and *OTP_CUST2_STAT* registers to determine the specific page(s). Information received from the device with this error must not be considered reliable. Writing *[RST_OTP_DATA]* = 1 does not reset this bit. To clear this bit, a device reset or HW_RESET is needed. Repeat the programming procedure on a different page (if available) will force the device to re-evaluate the condition. 0 = No fault 1 = Fault

8.5.4.13.4 FAULT_SYS

Address	**0x0536**							
Read Only	**Bit 7**	**Bit 6**	**Bit 5**	**Bit 4**	**Bit 3**	**Bit 2**	**Bit 1**	**Bit 0**
Name	LFO	RSVD	GPIO	DRST	CTL	CTS	TSHUT	TWARN
Reset	0	0	0	0	0	0	0	0

LFO =	Indicated LFO frequency is outside an expected range 0 = No fault detected 1 = Fault detected
RSVD =	Reserved
GPIO =	Indicates GPIO8 detects a FAULT input when *GPIO_CONF1[FAULT_IN_EN]* = 1. 0 = No fault detected 1 = FAULT input detected
DRST =	Indicates a digital reset has occurred. 0 = No digital reset 1 = Digital reset has occurred
CTL =	Indicates a long communication timeout occurred. Device action is configured by *[CTL_ACT]*. This bit is not observable if the action is set to device shutdown. 0 = No fault 1 = Long communication timeout occurs. Observable if long timeout action is set to SLEEP.
CTS =	Indicates a short communication timeout occurred. No action from the device. This can be served as an alert to system before reaching long communication timeout. 0 = No fault 1 = Short communication timeout occurs
TSHUT =	Indicates the previous shutdown was a thermal shutdown, in which the die temperature (die temp 2) is higher than the thermal shutdown threshold. 0 = Die temperature is less than thermal shutdown threshold 1 = The previous shutdown was a thermal shutdown
TWARN =	Indicates the die temperature (die temp 2) is higher than the *TWARN_THR[1:0]* setting. No action is taken by the device at the moment yet. This serves as a warning signal that the die temperature is approaching thermal shutdown. 0 = Die temperature is less than *TWARN_THR[1:0]* 1 = Die temperature is greater than *TWARN_THR[1:0]*

8.5.4.13.5 FAULT_PROT1

Address	**0x053A**							
Read Only	**Bit 7**	**Bit 6**	**Bit 5**	**Bit 4**	**Bit 3**	**Bit 2**	**Bit 1**	**Bit 0**

Copyright © 2023 Texas Instruments Incorporated

Name	RSVD						TPARITY_FAIL	VPARITY_FAIL
Reset	0	0	0	0	0	0	0	0
RSVD = Reserved								
TPARITY_FAIL = Indicates a parity fault is detected on any of the following OTUT related configurations: • OT or UT threshold setting • *[OTUT_MODE1:0]* setting • *GPIO_CONF1...4* settings 0 = No fault 1 = Fault								
VPARITY_FAIL = Indicates a parity fault is detected on any of the following OVUV related configurations: • OV or UV threshold setting • *[OVUV_MODE1:0]* setting • *[NUM_CELL3:0]* setting 0 = No fault 1 = Fault								

8.5.4.13.6 FAULT_PROT2

Address	**0x053B**							
Read Only	**Bit 7**	**Bit 6**	**Bit 5**	**Bit 4**	**Bit 3**	**Bit 2**	**Bit 1**	**Bit 0**
Name	RSVD	BIST_ABORT	TPATH_FAIL	VPATH_FAIL	UTCOMP_FAIL	OTCOMP_FAIL	OVCOMP_FAIL	UVCOMP_FAIL
Reset	0	0	0	0	0	0	0	0
RSVD = Reserved								
BIST_ABORT = Indicates either OVUV or OTUT BIST run is aborted. 0 = BIST runs to completion 1 = BIST abort								
TPATH_FAIL = Indicates a fault is detected along the OTUT signal path during BIST test. 0 = No fault 1 = Fault								
VPATH_FAIL = Indicates a fault is detected along the OVUV signal path during BIST test. 0 = No fault 1 = Fault								
UTCOMP_FAIL = Indicates the UT comparator fails during BIST test. 0 = No fault 1 = Fault								
OTCOMP_FAIL = Indicates the OT comparator fails during BIST test. 0 = No fault 1 = Fault								
OVCOMP_FAIL = Indicates the OV comparator fails during BIST test. 0 = No fault 1 = Fault								
UVCOMP_FAIL = Indicates the UV comparator fails during BIST test. 0 = No fault 1 = Fault								

8.5.4.13.7 FAULT_OV2

Address	**0x053D**							
Read Only	**Bit 7**	**Bit 6**	**Bit 5**	**Bit 4**	**Bit 3**	**Bit 2**	**Bit 1**	**Bit 0**
Name	RSVD	RSVD	OV6_DET	OV5_DET	OV4_DET	OV3_DET	OV2_DET	OV1_DET
Reset	0	0	0	0	0	0	0	0

Copyright © 2023 Texas Instruments Incorporated

OV1_DET to OV6_DET =	OV fault status for Cell1 to Cell6, results are from the OV comparator detection.

8.5.4.13.8 FAULT_UV2

Address	0x053F							
Read Only	**Bit 7**	**Bit 6**	**Bit 5**	**Bit 4**	**Bit 3**	**Bit 2**	**Bit 1**	**Bit 0**
Name	RSVD	RSVD	UV6_DET	UV5_DET	UV4_DET	UV3_DET	UV2_DET	UV1_DET
Reset	0	0	0	0	0	0	0	0
UV1_DET to UV6_DET =	UV fault status for Cell1 to Cell6, results are from the UV comparator detection.							

8.5.4.13.9 FAULT_OT

Address	0x0540							
Read Only	**Bit 7**	**Bit 6**	**Bit 5**	**Bit 4**	**Bit 3**	**Bit 2**	**Bit 1**	**Bit 0**
Name	OT8_DET	OT7_DET	OT6_DET	OT5_DET	OT4_DET	OT3_DET	OT2_DET	OT1_DET
Reset	0	0	0	0	0	0	0	0
OT1_DET to OT8_DET =	OT fault status for GPIO1 to GPIO8, results are from the OT comparator detection.							

8.5.4.13.10 FAULT_UT

Address	0x0541							
Read Only	**Bit 7**	**Bit 6**	**Bit 5**	**Bit 4**	**Bit 3**	**Bit 2**	**Bit 1**	**Bit 0**
Name	UT8_DET	UT7_DET	UT6_DET	UT5_DET	UT4_DET	UT3_DET	UT2_DET	UT1_DET
Reset	0	0	0	0	0	0	0	0
UT1_DET to UT8_DET =	UT fault status for GPIO1 to GPIO8, results are from the UT comparator detection.							

8.5.4.13.11 FAULT_COMP_GPIO

Address	0x0543							
Read Only	**Bit 7**	**Bit 6**	**Bit 5**	**Bit 4**	**Bit 3**	**Bit 2**	**Bit 1**	**Bit 0**
Name	GPIO8_FAIL	GPIO7_FAIL	GPIO6_FAIL	GPIO5_FAIL	GPIO4_FAIL	GPIO3_FAIL	GPIO2_FAIL	GPIO1_FAIL
Reset	0	0	0	0	0	0	0	0
GPIO1_FAIL to GPIO8_FAIL =	Indicates ADC vs. AUX ADC GPIO measurement diagnostic results for GPIO1 to GPIO8. 0 = Diagnostic pass 1 = Diagnostic fail. GPIO from Main ADC vs. AUX ADC measurement is greater than *[GPIO_THR2:0]*							

8.5.4.13.12 FAULT_COMP_VCCB2

Address	0x0546							
Read Only	**Bit 7**	**Bit 6**	**Bit 5**	**Bit 4**	**Bit 3**	**Bit 2**	**Bit 1**	**Bit 0**
Name	RSVD	RSVD	CELL6_FAIL	CELL5_FAIL	CELL4_FAIL	CELL3_FAIL	CELL2_FAIL	CELL1_FAIL
Reset	0	0	0	0	0	0	0	0
CELL1_FAIL to CELL6_FAIL =	Indicates voltage diagnostic results for cell1 to cell6. 0 = Diagnostic pass 1 = Diagnostic fail. VCELL vs. AUXCELL measurement is greater than *[VCCB_THR4:0]*							

8.5.4.13.13 FAULT_COMP_VCOW2

Address	0x0549							
Read Only	**Bit 7**	**Bit 6**	**Bit 5**	**Bit 4**	**Bit 3**	**Bit 2**	**Bit 1**	**Bit 0**

Copyright © 2023 Texas Instruments Incorporated

Name	RSVD	RSVD	VCOW6_FAIL	VCOW5_FAIL	VCOW4_FAIL	VCOW3_FAIL	VCOW2_FAIL	VCOW1_FAIL
Reset	0	0	0	0	0	0	0	0
VCOW1_FAIL to VCOW6_FAIL =	Indicates VC OW diagnostic results for cell1 to cell 6. 0 = Diagnostic pass 1 = Diagnostic fail. VCELL measurement is less than *[OW_THR3:0]*							

8.5.4.13.14 FAULT_COMP_CBOW2

Address	**0x054C**							
Read Only	**Bit 7**	**Bit 6**	**Bit 5**	**Bit 4**	**Bit 3**	**Bit 2**	**Bit 1**	**Bit 0**
Name	RSVD	RSVD	CBOW6_FAIL	CBOW5_FAIL	CBOW4_FAIL	CBOW3_FAIL	CBOW2_FAIL	CBOW1_FAIL
Reset	0	0	0	0	0	0	0	0
CBOW1_FAIL to CBOW6_FAIL =	Results of the CB OW diagnostic for CB FET1 to CB FET6. 0 = Pass 1 = Fail							

8.5.4.13.15 FAULT_COMP_CBFET2

Address	**0x054F**							
Read Only	**Bit 7**	**Bit 6**	**Bit 5**	**Bit 4**	**Bit 3**	**Bit 2**	**Bit 1**	**Bit 0**
Name	RSVD	RSVD	CBFET6_FAIL	CBFET5_FAIL	CBFET4_FAIL	CBFET3_FAIL	CBFET2_FAIL	CBFET1_FAIL
Reset	0	0	0	0	0	0	0	0
CBFET1_FAIL to CBFET6_FAIL =	Results of the CB FET diagnostic for CB FET1 to CB FET6. 0 = Pass 1 = Fail							

8.5.4.13.16 FAULT_COMP_MISC

Address	**0x0550**							
Read Only	**Bit 7**	**Bit 6**	**Bit 5**	**Bit 4**	**Bit 3**	**Bit 2**	**Bit 1**	**Bit 0**
Name	RSVD						COMP_ADC_ABORT	LPF_FAIL
Reset	0	0	0	0	0	0	0	0
RSVD =	Reserved							
COMP_ADC_ABORT =	Indicates the most recent ADC comparison diagnostic is aborted due to improper setting. Valid only if one of the ADC comparison diagnostics has started. 0 = ADC comparison diagnostic run to completion 1 = ADC comparison diagnostic is aborted							
LPF_FAIL =	Indicates LPF diagnostic result. 0 = Pass 1 = Fail							

8.5.4.13.17 FAULT_PWR1

Address	**0x0552**							
Read Only	**Bit 7**	**Bit 6**	**Bit 5**	**Bit 4**	**Bit 3**	**Bit 2**	**Bit 1**	**Bit 0**
Name	CVSS_OPEN	DVSS_OPEN	REFHM_OPEN	CVDD_UV	CVDD_OV	DVDD_OV	AVDD_OSC	AVDD_OV
Reset	0	0	0	0	0	0	0	0
CVSS_OPEN =	Indicates an open condition on CVSS pin. 0 = No fault 1 = Fault							

Copyright © 2023 Texas Instruments Incorporated

DVSS_OPEN =	Indicates an open condition on DVSS pin. 0 = No fault 1 = Fault
REFHM_OPEN =	Indicates an open condition on REFHM pin. 0 = No fault 1 = Fault
CVDD_UV =	Indicates an undervoltage fault on the CVDD LDO. 0 = No fault 1 = Fault
CVDD_OV =	Indicates an overvoltage fault on the CVDD LDO. 0 = No fault 1 = Fault
DVDD_OV =	Indicates an overvoltage fault on the DVDD LDO. 0 = No fault 1 = Fault
AVDD_OSC =	Indicates AVDD is oscillating outside of acceptable limits. 0 = No fault 1 = Fault This fault could trigger when transitioning from SLEEP to ACTIVE mode. So, if this fault is set, please ignore it and reset the fault.
AVDD_OV =	Indicates an overvoltage fault on the AVDD LDO. 0 = No fault 1 = Fault

8.5.4.13.18 FAULT_PWR2

Address	**0x0553**							
Read Only	**Bit 7**	**Bit 6**	**Bit 5**	**Bit 4**	**Bit 3**	**Bit 2**	**Bit 1**	**Bit 0**
Name	RSVD	PWRBIST_FAIL	RSVD	REFH_OSC	NEG5V_UV	TSREF_OSC	TSREF_UV	TSREF_OV
Reset	0	0	0	0	0	0	0	0

RSVD =	Reserved
PWRBIST_FAIL =	Indicates a fail on the power supply BIST run. 0 = No fault 1 = Fault
REFH_OSC =	Indicates REGH reference is oscillating outside of an acceptable limit. 0 = No fault 1 = Fault
NEG5V_UV =	Indicates an undervoltage fault on the NEG5V charge pump. 0 = No fault 1 = Fault
TSREF_OSC =	Indicates TSREF is oscillating outside of an acceptable limit. 0 = No fault 1 = Fault
TSREF_UV =	Indicates an undervoltage fault on the TSREF LDO. 0 = No fault 1 = Fault
TSREF_OV =	Indicates an overvoltage fault on the TSREF LDO. 0 = No fault 1 = Fault

8.5.4.13.19 FAULT_PWR3

Address	**0x0554**							
Read Only	**Bit 7**	**Bit 6**	**Bit 5**	**Bit 4**	**Bit 3**	**Bit 2**	**Bit 1**	**Bit 0**
Name	RSVD					RSVD	RSVD	AVDDUV_DRST

Copyright © 2023 Texas Instruments Incorporated

Reset	0	0	0	0	0	0	0	0
RSVD =	Reserved							
AVDDUV_DRST =	Indicates a digital reset occurred due to AVDD UV detected. This also applies when device wakes up after a SHUTDOWN or HW Reset event. 0 = No reset 1 = Digital reset occurred due to AVDD UV							

8.5.4.14 Debug Control and Status

8.5.4.14.1 DEBUG_UART_RC

Address	**0x0781**							
Read Only	**Bit 7**	**Bit 6**	**Bit 5**	**Bit 4**	**Bit 3**	**Bit 2**	**Bit 1**	**Bit 0**
Name	RSVD		RC_IERR	RC_TXDIS	RC_SOF	RC_BYTE_ERR	RSVD	RC_CRC
Reset	0	0	0	0	0	0	0	0
RSVD =	Reserved							
RC_IERR =	Detects initialization byte error in the received command frame. This may be due to the frame initialization byte has a stop error, incorrect frame type is set, or reserved command type bit is set. All bytes that follow are ignored until a communication CLEAR is received. When a communication frame is ignored, the device will not attempt to detect any communication error in the ignored frame nor counting it as valid/discard in the frame counters. 0 = No error 1 = Error detected							
RC_TXDIS =	Detects if UART TX is disabled, but the host MCU has issued a command to read data from the device. 0 = No error 1 = Error detected							
RC_SOF =	Detects a start-of-frame (SOF) error. That is, an UART CLEAR is received on the UART before the current frame is finished. 0 = No error 1 = Error detected							
RC_BYTE_ERR =	Detects any byte error, other than the error in the initialization byte, in the received command frame. All bytes that follow are ignored until a communication CLEAR is received. When a communication frame is ignored, the device will not attempt to detect any communication error in the ignored frame nor counting it as valid/discard in the frame counters. 0 = No error 1 = Error detected							
RSVD =	Reserved							
RC_CRC =	Detects a CRC error in the received command frame from UART. The frame will be considered as discarded frame. 0 = No error 1 = Error detected							

8.5.4.14.2 DEBUG_UART_RR_TR

Address	**0x0782**							
Read Only	**Bit 7**	**Bit 6**	**Bit 5**	**Bit 4**	**Bit 3**	**Bit 2**	**Bit 1**	**Bit 0**
Name	RSVD			TR_SOF	TR_WAIT	RR_SOF	RR_BYTE_ERR	RR_CRC
Reset	0	0	0	0	0	0	0	0
RSVD =	Reserved							
TR_SOF =	Indicates that a UART CLEAR is received while the device is still transmitting data. 0 = No error 1 = Error detected							

Copyright © 2023 Texas Instruments Incorporated

TR_WAIT =	The device is waiting for its turn to transfer a response out but the action is terminated because either: • The device receives a UART CLEAR signal. • The device receives a new command. 0 = No error 1 = Error detected
RR_SOF =	Indicates a UART CLEAR is received while receiving the response frame. Response frames on the UART only apply in multidrop mode. 0 = No error 1 = Error detected
RR_BYTE_ERR =	Detects any byte error, other than the error in the initialization byte, in the received response frame. All bytes that follow are ignored until a communication CLEAR is received. When a communication frame is ignored, the device will not attempt to detect any communication error in the ignored frame nor counting it as valid/discard in the frame counters. 0 = No error 1 = Error detected
RR_CRC =	Detects are CRC error in the received response frame from UART. The frame will be considered as a discarded frame. 0 = No error 1 = Error detected

8.5.4.14.3 DEBUG_UART_DISCARD

Address	0x0789							
Read Only	**Bit 7**	**Bit 6**	**Bit 5**	**Bit 4**	**Bit 3**	**Bit 2**	**Bit 1**	**Bit 0**
Name	COUNT[7:0]							
Reset	0	0	0	0	0	0	0	0
COUNT[7:0] =	UART frame counter to track the number of discard frames received or transmitted. The registers of the *DEBUG_UART_DISCARD* and *DEBUG_UART_VALID** are latched and the related counters are reset when this register is read.							

8.5.4.14.4 DEBUG_UART_VALID_HI/LO

DEBUG_UART_VALID_HI

Address	0x078C							
Read Only	**Bit 7**	**Bit 6**	**Bit 5**	**Bit 4**	**Bit 3**	**Bit 2**	**Bit 1**	**Bit 0**
Name	COUNT[7:0]							
Reset	0	0	0	0	0	0	0	0
COUNT[7:0] =	The high-byte of UART frame counter to track the number of valid frames received or transmitted. Counter saturates when both *DEBUG_UART_VALID_HI/LO* is 0xFF. This register is latched and the related counter is reset when *DEBUG_UART_DISCARD* is read.							

DEBUG_UART_VALID_LO

Address	0x078D							
Read Only	**Bit 7**	**Bit 6**	**Bit 5**	**Bit 4**	**Bit 3**	**Bit 2**	**Bit 1**	**Bit 0**
Name	COUNT[7:0]							
Reset	0	0	0	0	0	0	0	0
COUNT[7:0] =	The low-byte of UART frame counter to track the number of valid frames received or transmitted. Counter saturates when both *DEBUG_UART_VALID_HI/LO* is 0xFF. This register is latched and the related counter is reset when *DEBUG_UART_DISCARD* is read.							

8.5.4.14.5 DEBUG_OTP_SEC_BLK

Address	0x07A0							

Copyright © 2023 Texas Instruments Incorporated

Read Only	Bit 7	Bit 6	Bit 5	Bit 4	Bit 3	Bit 2	Bit 1	Bit 0
Name	BLOCK[7:0]							
Reset	0	0	0	0	0	0	0	0
BLOCK[7:0] =	Holds last OTP block address where SEC occurred. Valid only when *FAULT_OTP[SEC_DET]* = 1.							

8.5.4.14.6 DEBUG_OTP_DED_BLK

Address	0x07A1							
Read Only	Bit 7	Bit 6	Bit 5	Bit 4	Bit 3	Bit 2	Bit 1	Bit 0
Name	BLOCK[7:0]							
Reset	0	0	0	0	0	0	0	0
BLOCK[7:0] =	Holds last OTP block address where DED occurred. Valid only when *FAULT_OTP[DED_DET]* = 1.							

8.5.4.15 OTP Programming Control and Status

8.5.4.15.1 OTP_PROG_UNLOCK1A through OTP_PROG_UNLOCK1D

Address	0x0300 to 0x0303							
RW	Bit 7	Bit 6	Bit 5	Bit 4	Bit 3	Bit 2	Bit 1	Bit 0
Name	CODE[7:0]							
Reset	0	0	0	0	0	0	0	0
CODE[7:0] =	The first 32-bit OTP programming unlock code is required as part of the OTP programming unlock sequence before performing OTP programming. This 32-bit code is entered in the sequence from *OTP_PROG_UNLOCK1A* to *OTP_PROG_UNLOCK1D*. These registers always read back 0.							

8.5.4.15.2 OTP_PROG_UNLOCK2A through OTP_PROG_UNLOCK2D

Address	0x0352 to 0x0355							
RW	Bit 7	Bit 6	Bit 5	Bit 4	Bit 3	Bit 2	Bit 1	Bit 0
Name	CODE[7:0]							
Reset	0	0	0	0	0	0	0	0
CODE[7:0] =	The second 32-bit OTP programming unlock code, required as part of the OTP programming unlock sequence before performing OTP programming. This 32-bit code is entered in the sequence from *OTP_PROG_UNLOCK2A* to *OTP_PROG_UNLOCK2D*. These registers always read back 0.							

8.5.4.15.3 OTP_PROG_CTRL

Address	0x030B							
RW	Bit 7	Bit 6	Bit 5	Bit 4	Bit 3	Bit 2	Bit 1	Bit 0
Name	RSVD						PAGESEL	PROG_GO
Reset	0	0	0	0	0	0	0	0
RSVD =	Reserved							
PAGESEL =	Selects which customer OTP page to be programmed. 0 = page 1 1 = page 2							
PROG_GO =	Enables programming for the OTP page selected by *OTP_PROG_CTRL[PAGESEL]*. Requires *OTP_PROG_UNLOCK1** and *OTP_PROG_UNLOCK2** registers are set to the correct codes. 0 = Ready 1 = Start OTP programming							

8.5.4.15.4 OTP_ECC_TEST

Address	0x034C							

Copyright © 2023 Texas Instruments Incorporated

RW	Bit 7	Bit 6	Bit 5	Bit 4	Bit 3	Bit 2	Bit 1	Bit 0
Name	RSVD				DED_SEC	MANUAL_AUTO	ENC_DEC	ENABLE
Reset	0	0	0	0	0	0	0	0
RSVD =	Reserved							
DED_SEC =	Sets the decoder function (SEC or DED) to test. This bit is ignored during encoder testing. 0 = Test SEC functionality. Sets the *FAULT_OTP[SEC_DETECT]* flag and outputs test result to *OTP_ECC_DATAOUT** registers. 1 = Test DED functionality. Sets the *FAULT_OTP[DED_DETECT]* flag and outputs test result *OTP_ECC_DATAOUT**. Note: If SEC or DEC fault is detected, host sets *[RST_OTP_DATA]* = 1 to reset the corresponding fault. Switch to run SEC test does not clear DEC fault or vice versa.							
MANUAL_AUTO =	Sets the location of the data to use for the ECC test. 0 = Auto mode. Use the internal data for test. 1 = Manual mode. Uses data in *ECC_DATAIN_n* registers for test. Use for MPF test.							
ENC_DEC =	Sets the encoder/decoder test to run when *OTP_ECC_TEST[ENABLE]* = 1. 0 = Run decoder test 1 = Run encoder test							
ENABLE =	Executes the OTP ECC test configured by *[ENC_DEC]* and *[DED_SEC]* bits. 0 = Normal operation, ECC test disabled 1 = Initiate test							

8.5.4.15.5 OTP_ECC_DATAIN1 through OTP_ECC_DATAIN9

Address	0x0343 to 0x034B							
RW	Bit 7	Bit 6	Bit 5	Bit 4	Bit 3	Bit 2	Bit 1	Bit 0
Name	DATA[7:0]							
Reset	0	0	0	0	0	0	0	0
DATA[7:0] =	When ECC is enabled in manual mode, *CUST_ECC_TEST[MANUAL_AUTO]* = 1, *OTP_ECC_DATAIN1…9* registers are used to test the ECC encoder/decoder. If *CUST_ECC_TEST[ENC_DEC]* = 1, *ECC_DATAIN8* through *ECC_DATAIN1* are fed to the encoder. If *CUST_ECC_TEST[ENC_DEC]* = 0, *ECC_DATAIN9* through *ECC_DATAIN1* are fed to the decoder. The ECC_DATAOUT0…8 bytes must be read back to verify functionality.							

8.5.4.15.6 OTP_ECC_DATAOUT1 through OTP_ECC_DATAOUT9

Address	0x0510 to 0x0518							
Read Only	Bit 7	Bit 6	Bit 5	Bit 4	Bit 3	Bit 2	Bit 1	Bit 0
Name	DATA[7:0]							
Reset	0	0	0	0	0	0	0	0
DATA[7:0] =	*OTP_ECC_DATAOUT** bytes output the results of the ECC decoder and encoder tests. If *CUST_ECC_TEST[ENC_DEC]* = 0, *ECC_DATAOUT8* through *ECC_DATAOUT1* are read to determine a successful decoder test. If *CUST_ECC_TEST[ENC_DEC]* = 1, *ECC_DATAOUT9* through *ECC_DATAOUT1* are read to determine a successful encoder test. The correct result depends on the input to the test.							

8.5.4.15.7 OTP_PROG_STAT

Address	0x0519							
Read Only	Bit 7	Bit 6	Bit 5	Bit 4	Bit 3	Bit 2	Bit 1	Bit 0
Name	UNLOCK	OTERR	UVERR	OVERR	SUVERR	SOVERR	PROGERR	DONE
Reset	0	0	0	0	0	0	0	0

Copyright © 2023 Texas Instruments Incorporated

UNLOCK =	Indicates the OTP programming function unlock status. After this bit is set (that is, OTP programming is enabled), the host writes to the *OTP_PROG_CTRL* register to start the OTP programming. Writing to any other register relocks the OTP programming function and clears this bit to 0. *[PROG_GO]* = 1 also clears this bit to 0. 0 = OTP programming locked 1 = OTP programming is unlocked
OTERR =	Indicates the die temperature is greater than T_{OTP_PROG} and device does not start OTP programming. 0 = No fault 1 = Detected die temperature is greater than T_{OTP_PROG}. Abort OTP programming.
UVERR =	Indicates an undervoltage error detected on the programming voltage during OTP programming. This bit is cleared with *[PROG_GO]* = 1. 0 = No error 1 = UV error detected
OVERR =	Indicates an overvoltage error detected on the programming voltage during OTP programming. This bit is cleared with *[PROG_GO]* = 1. Information received from the device with this error must not be considered reliable. 0 = No error 1 = OV error detected
SUVERR =	A programming voltage stability test is performed before starting the actual OTP programming. This bit indicates an undervoltage error is detected during the voltage stability test. This bit is cleared with *[PROG_GO]* = 1. 0 = No error 1 = UV error detected during OTP programming voltage stability test
SOVERR =	A programming voltage stability test is performed before starting the actual OTP programming. This bit indicates an overvoltage error is detected during the voltage stability test. This bit is cleared with *[PROG_GO]* = 1. 0 = No error 1 = OV error detected during OTP programming voltage stability test
PROGERR =	Indicates when an error is detected due to incorrect page setting caused by any of the following: • Trying to program but OTP programming *[UNLOCK]* = 0. • Trying to program a page that has *[TRY]* = 1. • Trying to program a page which has *[FMTERR]* = 1. This bit is cleared with *[PROG_GO]* = 1. 0 = No error or programming not attempted 1 = Error detected
DONE =	Indicates the status of the OTP programming for the selected page. This bit is cleared with *[PROG_GO]* = 1. 0 = Not completed or programming not attempted 1 = Complete.

8.5.4.15.8 OTP_CUST1_STAT

Address	**0x051A**							
Read Only	**Bit 7**	**Bit 6**	**Bit 5**	**Bit 4**	**Bit 3**	**Bit 2**	**Bit 1**	**Bit 0**
Name	LOADED	LOADWRN	LOADERR	FMTERR	PROGOK	UVOK	OVOK	TRY
Reset	0	0	0	0	0	0	0	0

LOADED =	Indicates OTP page 1 has been selected for loading into the related registers. See *[LOADERR]* and *[LOADWRN]* for error and warning status. 0 = Not selected for loading 1 = Page 1 selected and loaded
LOADWRN =	Indicates OTP page 1 was loaded but with one or more SEC warnings. 0 = No warning, or no load attempted 1 = Warning
LOADERR =	Indicates an error while attempting to load OTP page 1; that is, DED is detected while loading the selected page. 0 = No error, or no load was attempted. 1 = Error detected
FMTERR =	Indicates a formatting error in OTP page 1; that is, when *[UVOK]* or *[OVOK]* is set, but *[TRY]* = 0. Do not program if this bit is set. 0 = No error 1 = Error detected
PROGOK =	Indicates the validity for loading for OTP page 1. A valid page indicates that successful programming occurred. 0 = Not valid 1 = Valid

Copyright © 2023 Texas Instruments Incorporated

UVOK =	Indicates an OTP programming voltage undervoltage condition is detected during programming attempt for OTP page 1. The OV condition may also trigger the UV as part of the shutdown process. 0 = UV condition detected. Also reads as 0 if no programming attempt is performed. 1 = No UV condition detected
OVOK =	Indicates an OTP programming voltage overvoltage condition is detected during programming attempt for OTP page 1. The OV condition will trigger the UV as part of the shutdown process. The device must be taken out of service. 0 = OV condition detected. Also reads as 0 if no programming attempt is performed. 1 = No OV condition detected
TRY =	Indicates a first programming attempt for OTP page 1. 0 = No first attempt made 1 = First attempt made

8.5.4.15.9 OTP_CUST2_STAT

Address	**0x051B**							
Read Only	**Bit 7**	**Bit 6**	**Bit 5**	**Bit 4**	**Bit 3**	**Bit 2**	**Bit 1**	**Bit 0**
Name	LOADED	LOADWRN	LOADERR	FMTERR	PROGOK	UVOK	OVOK	TRY
Reset	0	0	0	0	0	0	0	0

LOADED =	Indicates OTP page 2 has been selected for loading into the related registers. See *[LOADERR]* and *[LOADWRN]* for error and warning status. 0 = Not selected for loading 1 = Page 2 selected and loaded
LOADWRN =	Indicates OTP page 2 was loaded but with one or more SEC warnings. 0 = No warning, or no load attempted 1 = Warning
LOADERR =	Indicates an error while attempting to load OTP page 2; that is, DED is detected while loading the selected page. 0 = No error, or no load was attempted. 1 = Error detected
FMTERR =	Indicates a formatting error in OTP page 2; that is, when *[UVOK]* or *[OVOK]* is set, but *[TRY]* = 0. Do not program if this bit is set. 0 = No error 1 = Error detected
PROGOK =	Indicates the validity for loading for OTP page 2. A valid page indicates that successful programming occurred. 0 = Not valid 1 = Valid
UVOK =	Indicates an OTP programming voltage undervoltage condition is detected during programming attempt for OTP page 2. The OV condition may also trigger the UV as part of the shutdown process. 0 = UV condition detected. Also reads as 0 if no programming attempt is performed. 1 = No UV condition detected
OVOK =	Indicates an OTP programming voltage overvoltage condition is detected during programming attempt for OTP page 2. The OV condition will trigger the UV as part of the shutdown process. The device must be taken out of service. 0 = OV condition detected. Also reads as 0 if no programming attempt is performed. 1 = No OV condition detected
TRY =	Indicates a first programming attempt for OTP page 2. 0 = No first attempt made 1 = First attempt made

Copyright © 2023 Texas Instruments Incorporated

9 Application and Implementation

Note

Information in the following applications sections is not part of the TI component specification, and TI does not warrant its accuracy or completeness. TI's customers are responsible for determining suitability of components for their purposes, as well as validating and testing their design implementation to confirm system functionality.

9.1 Application Information

The BQ756506-Q1 device provides high-accuracy, cell voltages, temperature and current measurements for 4-series up to 6-series battery modules.

9.2 Typical Applications

9.2.1 Application Circuits

The following application circuits are based on connecting to a 6S and 4S module.

Copyright © 2023 Texas Instruments Incorporated

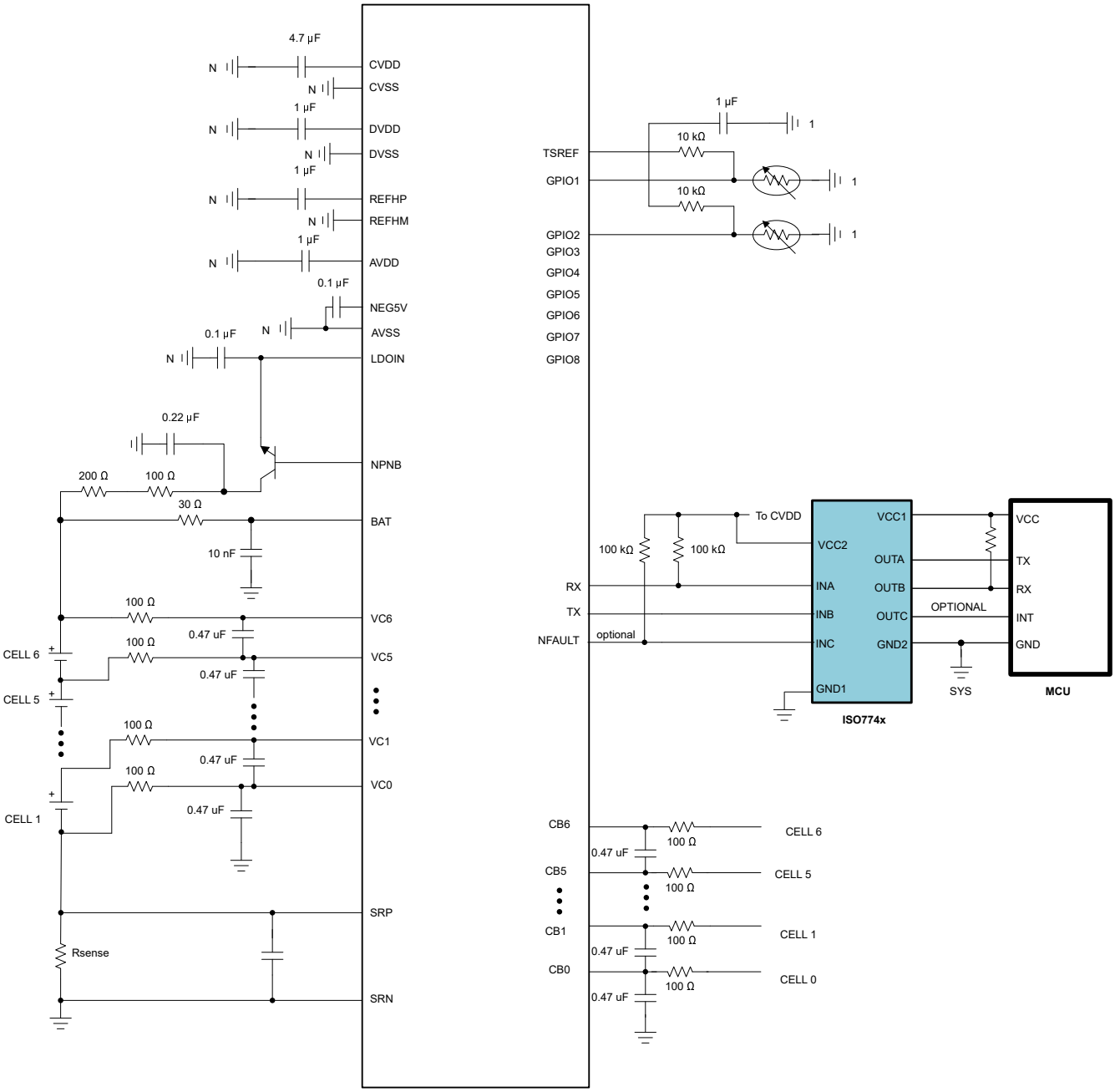

Figure 9-1. Typical Application Circuit - 6S

Copyright © 2023 Texas Instruments Incorporated

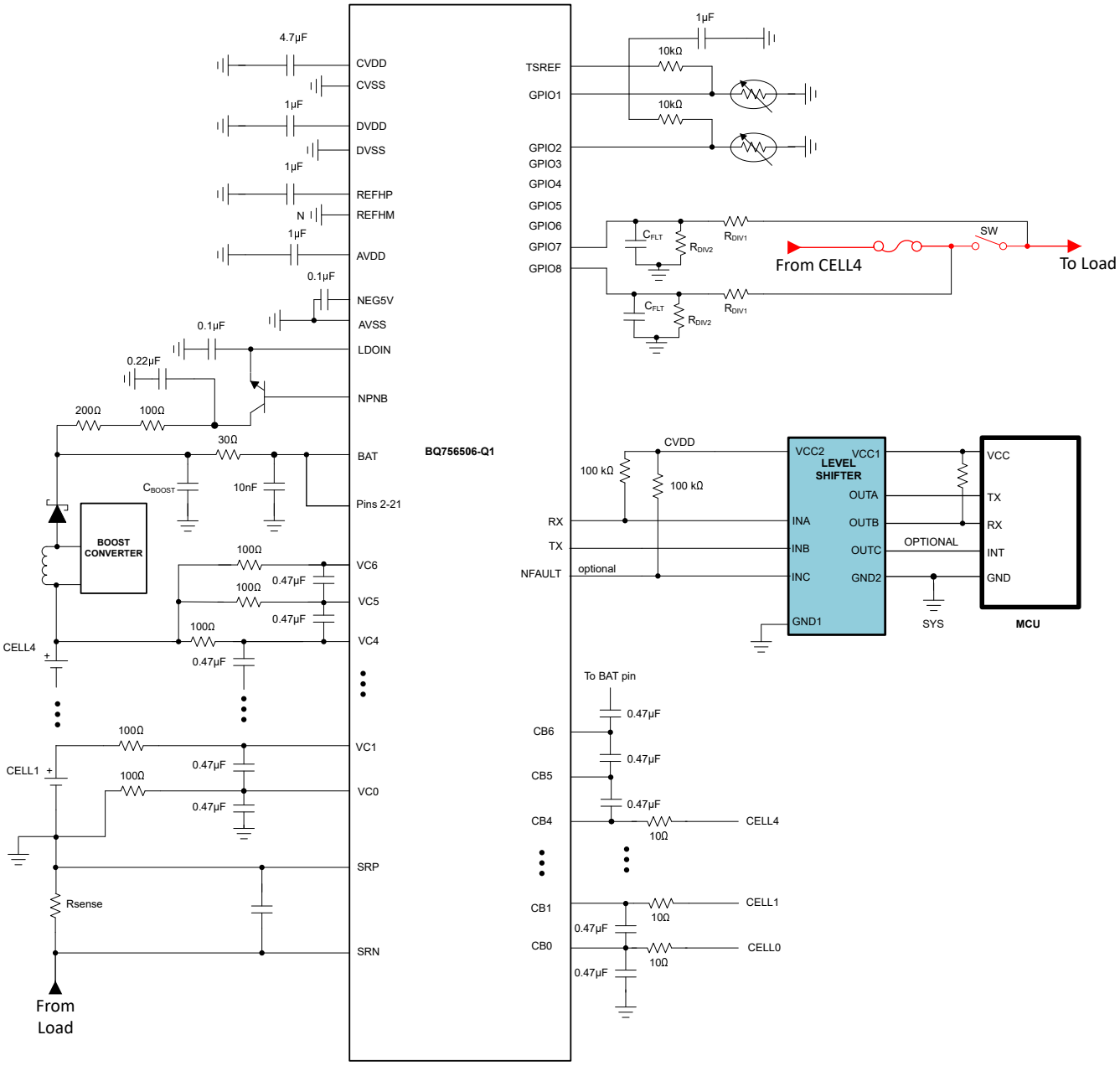

Figure 9-2. Typical Application Circuit - 4S

9.2.1.1 Design Requirements

Table 9-1 below shows the design parameters.

Table 9-1. Recommended Design Requirements

PARAMETER	VALUE
Module Voltage Range (Voltage at the BAT pin)	9V to 32V
Number of cells	6 cells
Cell voltage range	0V to 5V

Copyright © 2023 Texas Instruments Incorporated

9.2.1.2 Detailed Design Procedure

9.2.1.2.1 Cell Sensing and Balancing Inputs

Table 9-2. Cell Sensing and Balancing Inputs

Related Pins	Components	Value	Description
VC0 to VC6	Filter resistor	100 Ω	Only differential RC filters are needed for VC channels. Besides serving for input signal filtering, these components are required to support hot-plug events during cell module insertion. Hence, it is highly recommended to use the component values as suggested.
	Filter capacitor	0.47 µF/16 V or 1 µF/16 V	
CB0 to CB6	Filter resistor	Depends on system's balancing current requirements	The filter resistor on CB pins sets the maximum balancing current. See Section 8.3.3 for details. Only differential RC filters are needed for CB channels. Besides serving for input signal filtering, these components are required to support hot-plug events during cell module insertion. Hence, it is highly recommended to use the component values as suggested.
	Filter capacitor	0.47 µF/16 V or 1 µF/16 V	

Cell Connections

It is recommended to populate the battery cells from bottom channels (both VC and CB channels) and up, leaving upper channels as unused channels if cell module size is smaller than the maximum channel size of the device. Unused channel(s) will be connected as shown in Figure 9-3.

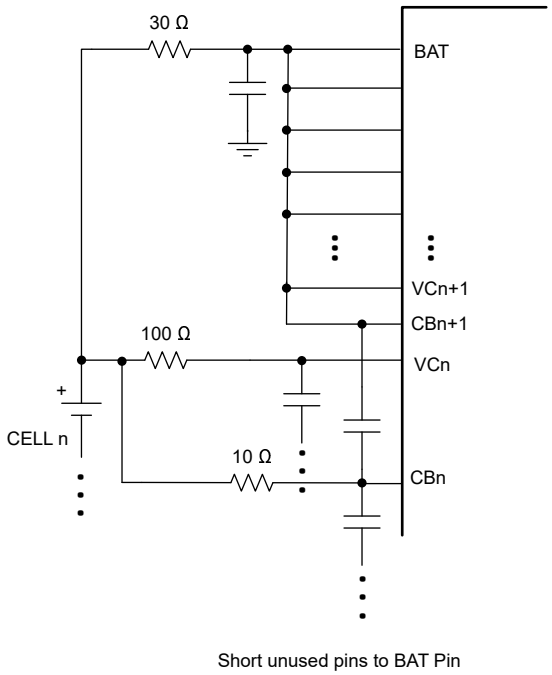

Figure 9-3. Unused VC and CB Channels - 6S

Copyright © 2023 Texas Instruments Incorporated

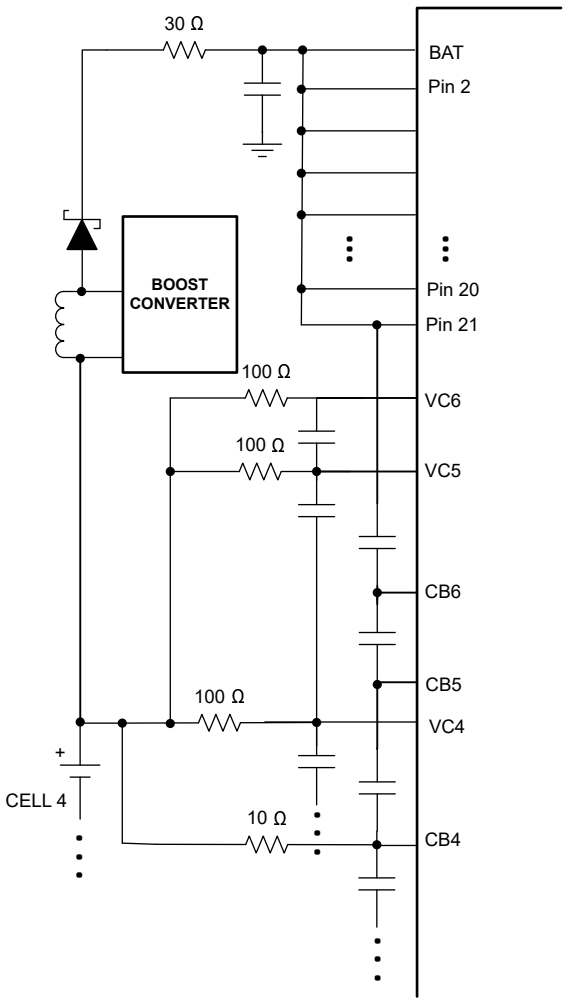

For 4S applications, short NC pins to BAT Pin and short VC5-6 to VC4

Figure 9-4. Unused VC and CB Channels - 4S

Fuse and Relay Status Detection

For systems that require fuse and relay monitoring, the GPIOs can be used for this measurement, as shown in Figure 9-5. The GPIOs provide single-ended ADC measurements of the fuse and relay nodes via a resistor divider, and the difference between these measurements can be used to determine the status of the fuse and the relay. See the fuse and relay diagnostics table for how to detect each case.

R_{DIV1} and R_{DIV2} should be sized so that the maximum module voltage does not cause the GPIO voltages to exceed 5V.

Copyright © 2023 Texas Instruments Incorporated

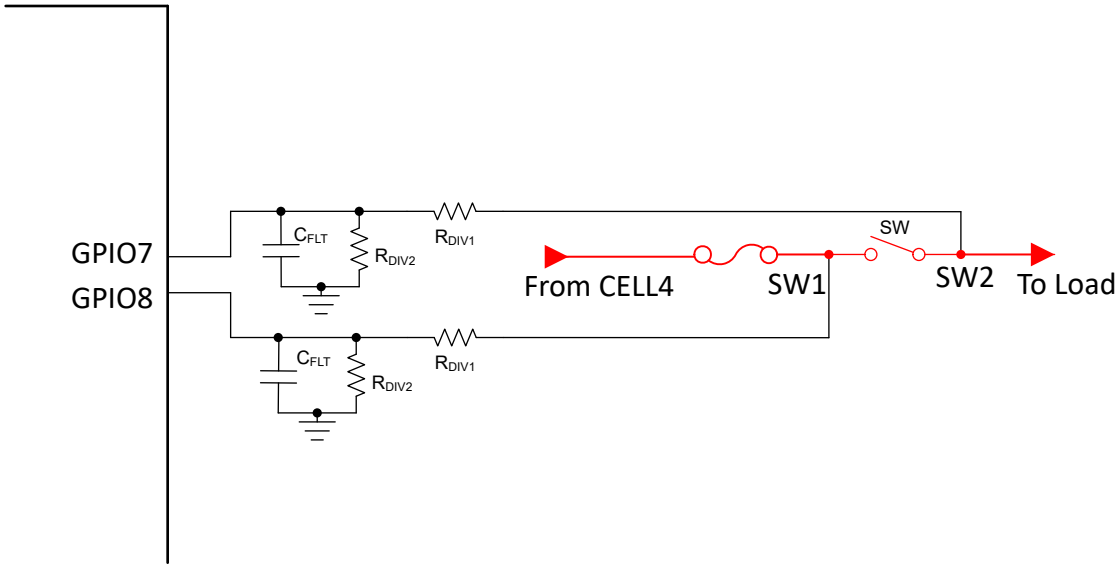

Figure 9-5. Fuse and Relay Status Detection

Fuse and Relay Diagnostic

In the table below, GPIO8 is used for fuse diagnostics and GPIO7 is used for relay diagnostics. SW1 and SW2 are real voltages at the fuse and relay nodes, calculated from the GPIO resistor dividers. VC4 is the cell voltage measurement of cell 4.

Table 9-3. Fuse and Relay Diagnostic

Diagnostic	Open/Blown	Close
Fuse	Indicated when (SW1-VC4) <<0V. Open Fuse causes SW1 to be pull down towards ground by the load.	Indicated when (SW1-VC4) = ~0V This IR drop depends on current flow and fuse impedance (e.g. +/-0.3V)
Relay	Indicated when (SW2-SW1) <<0V Open Relay causes SW2 to be pull down towards ground by the load.	Indicated when (SW2-VC4) = ~ 0V This IR drop depends on current flow and fuse impedance (e.g. +/-0.3V)

9.2.1.2.2 Synchronize Voltage and Current Measurements

It is possible to synchronize the current and voltage measurements in the device. Both Voltage and current ADC start at the same time. CSADC conversion rate (Tconv) and ADC mode of operation (continuous or single run mode), time between reading voltage and current registers are some factors to consider when synchronizing the measurements.

Single run mode

Figure 9-6 shows the case where single conversion happens at 3xTcs_conv where Tcs_conv = 512 µS and the CSADC stops. In this mode, the voltage ADC completes 8 round robin cycles and stops. The voltage and the current data conversions stop within 128 µS of each other. This can be considered the VI sync time in single conversion mode with above settings. The entire single run mode duration is much less than the settling of the voltage low pass filters. Hence the effect of filters can be ignored for this mode of operation.

Copyright © 2023 Texas Instruments Incorporated

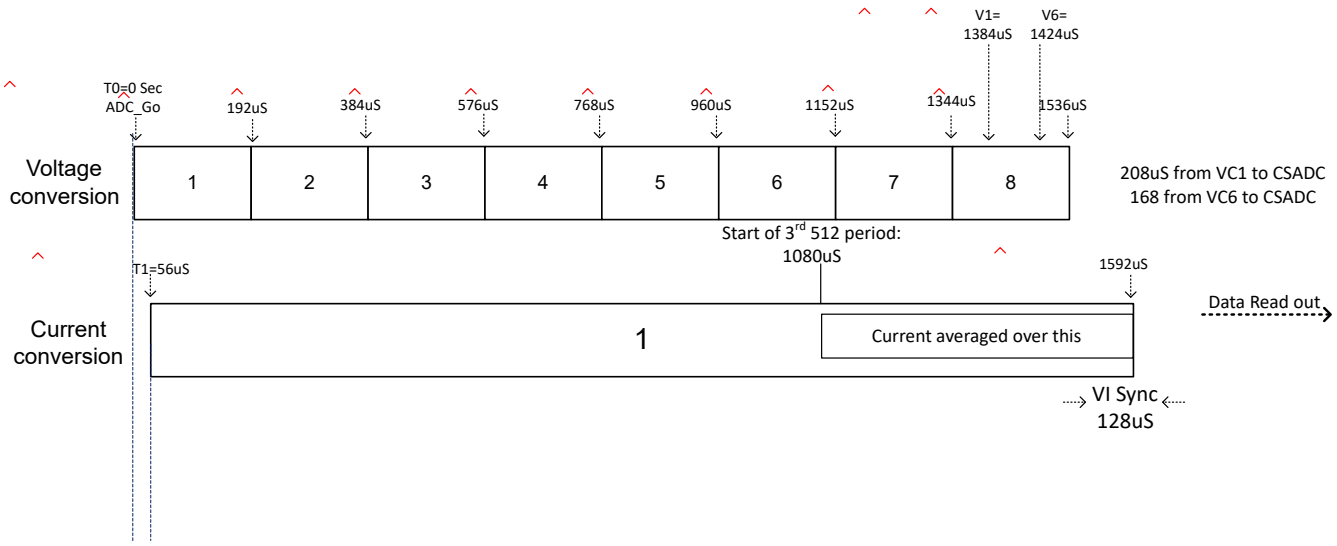

Figure 9-6. Single Conversion

Continuous run mode

When in continuous conversion mode, the voltage and the current ADCs are continuously running and constantly refreshing the contents of the results register after every conversion. The voltage and the current results registers have 89 registers between them. If the voltage and current are read out in a single read burst, the time that elapses between reading the voltage registers to reading the current register could be 1 mS. Hence for any Tcs_conv <=1 mS, the VI sync time between voltage and current conversion can be considered 1 mS.

Effect of Voltage Low Pass Filter in continuous run mode

The Low pass filter in the voltage ADC path has fcutoff options of 6.5 Hz, 13 Hz, 26 Hz, 53 Hz, 111 Hz, 240 Hz, and 600 Hz, configurable through the ADC_CONF1[LPF_VCELL2:0] setting. The filters ensure that the voltage measurement is stable over a long period of time determined by the fcutoff. Since the voltage does not vary much within the filter time constant, it relaxes the requirement to read back the voltage and the current registers as close to each other as possible and gives MCU more time to read the results register. This is shown in Figure 9-7. Here the current conversion 'M' in the figure can be considered synced with voltage cycles around 'M' within 'N-23' and 'N+23' round robin cycles. The low pass filters are available in the voltage path, but not the current path which causes the two paths to have different frequency response. This needs to be accounted for in selection of filter fcutoff options and CSADC conversion rates.

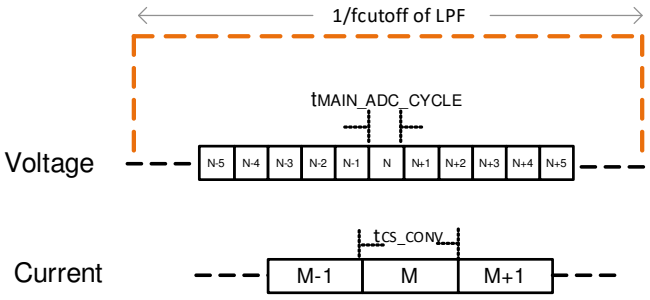

Figure 9-7. Effect of Voltage Low Pass Filter in Continuous Run Mode

Copyright © 2023 Texas Instruments Incorporated

9.2.1.2.3 BAT and External NPN

Table 9-4. BAT and External NPN

Related Pins	Components	Value	Description
BAT	Filter resistor	30 Ω	Single-ended RC filter, recommended values must be used for hot-plug performance.
	Filter capacitor	10 nF/100 V Can use lower voltage rating based on module size	
NPNB	NPN (Q1)	Collector–emitter breakdown voltage 80 V to 100 V, but can use lower rating based on module size Power rating ≥ 1 W Gain > 80 at the expected load current Current handling >100 mA	The external NPN is used to form a pre-regulation circuit to provide a 6-V (typical) input to the LDOIN pin. The voltage rating of the NPN can be optimized by the following equation: **NPN voltage rating = Max VModule – Min VLDOIN + Margin** Where: Max VModule = maximum module voltage with fully charged cells Min VLDOIN = the minimum spec of the VLDOIN parameter Margin = system transient voltage + design margin per application requirement
	Resistor on external NPN collector (R_{NPN})	Various based on module voltage	The resistor has a couple purposes: (a) For an RC filter for the NPN pre-regulation circuit (b) Share the thermal dissipation with the NPN
	Capacitor on external NPN collector	0.22 µF/100 V Can use lower voltage rating based on module size	The capacitor forms the RC filter for the NPN pre-regulation circuit The capacitor rating is based on peak voltage spike seen on the module. For smaller module size, <100-V rated capacitor can be used. System designer selects the optimized voltage-rated capacitor per their system tolerance and requirements.

To reduce the power rating needed for the external NPN (Q1), system designer can put power resistors on the NPN collector to create IR drop from the module voltage (VModule). Figure 9-8 shows the current paths to power the BQ756506 device.

Typical ISTARTUP current i.e. Inrush startup current when device enters from SHUTDOWN to ACTIVE is 20mA for TI recommended components. This current is sum of IBAT + ILDOIN, and is dependent on PCB board components and layout, so recommend user to characterize on their end.

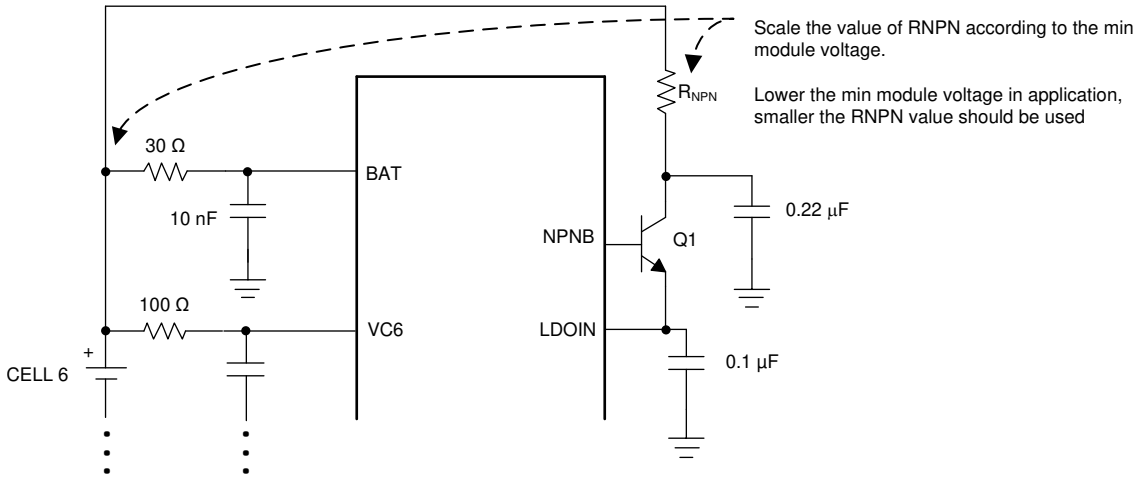

Figure 9-8. Power Consumption Paths

To ensure there is sufficient headroom to maintain 6 V (typical) regulated voltage on LDOIN pin, system designer ensures VCollector has ≥ 8 V at any time with the assumption of about 2-V drop across the NPN.

Hence, maximum allowable R_{NPN} value = ((Min VModule) – (VCollector)) / (Max peak current)

Copyright © 2023 Texas Instruments Incorporated

Where:

Min VModule: based on module size and minimum cell voltage per application

VCollector: 8 V with the assumption of about 2-V drop across NPN

Max peak current: highest operation current, which is the active current with all functions turned on. Note that different communication isolation components (for example, capacitor isolation versus transformer, or the type of transformer) contribute different loading to the total power consumption.

Power the device separately from the top of the battery stack:

The device is designed to be powered by the battery stack. If there is a need to power the device from a separately source such as in Figure 9-9, the following relationship between the voltage on the BAT pin and the highest VC pin voltage (with respected to ground): BAT voltage >= (0.5 * highest VC voltage) + 2

For example, if the device is connected to a 4S module with max cell voltage of 4.2V/cell, the highest VC pin is VC4, and the highest VC4 voltage is (4.2V * 4) = 16.8V. If the BAT pin is powered separately, BAT voltage must be >= 10.4V.

For <6s modules, it is recommended to use an external boost between the top cell and the BAT path. This boost converter should be sized so that BAT meets all of the above requirements. See the following figure.

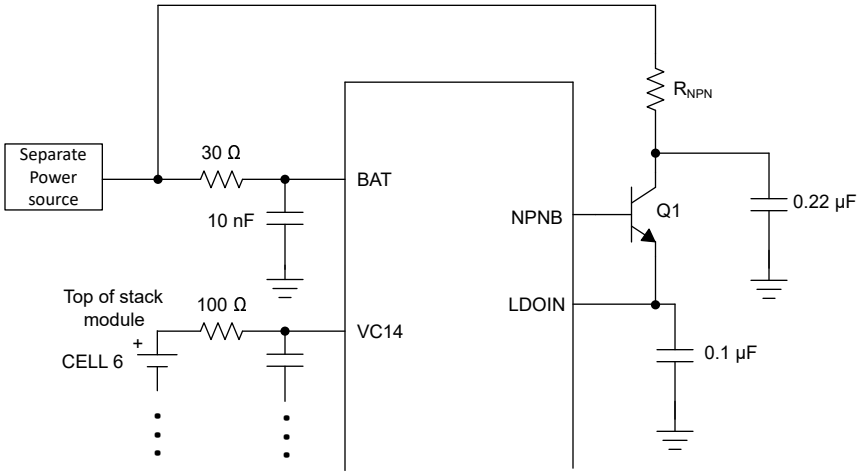

Figure 9-9. Separate Power Source to BAT

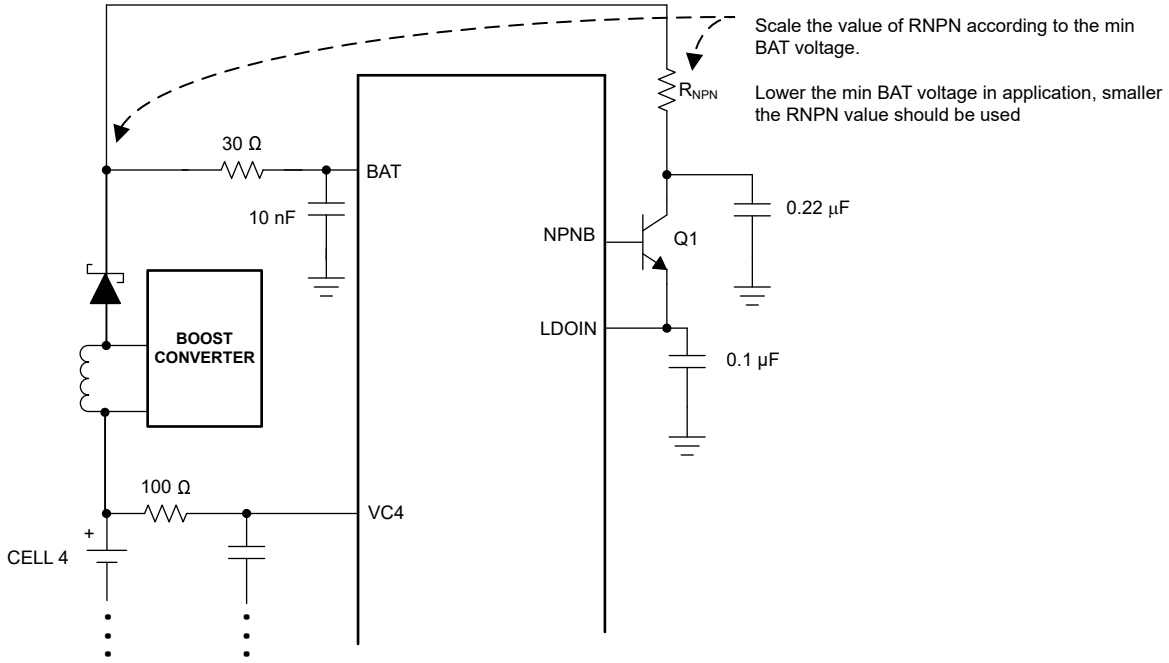

Figure 9-10. Boost Converter to Supply BAT in 4S Applications

9.2.1.2.4 Power Supplies, Reference Input

Table 9-5. Power Supplies, Reference Input

Related Pins	Components	Value	Description
AVDD, DVDD, TSREF	Bypass capacitor	1 µF/10 V	Bypass capacitor for the internal LDOs
CVDD	Bypass capacitor	4.7 µF/10 V	Bypass capacitor for CVDD
NEG5V	Bypass capacitor	0.1 µF/10 V	Bypass capacitor for the negative charge pump

9.2.1.2.5 GPIO For Thermistor Inputs

When using external thermistor, for ADC measurement only, there is no limitation of what type of thermistors (NTC or PTC) or the bias resistor (R1) value or whether the thermistor is placed on high side or low side with respected to the bias resistor.

However, when using with the integrated OTUT comparators, the programmable OT and UT threshold ranges are designed to work with a 103NTC (10 kΩ at 25°C) type of NTC thermistor, following the connection shown in Figure 9-11 with different options for the R1 and R2 resistors.

- Option 1: R_1 = 10 kΩ, and no R_2
- Option 2: R_1 = 10 kΩ, and R_2 = 100 kΩ for better linearity at cold temperature
- Option 3: R_1 = 3.6 kΩ, and R_2 = 15 kΩ. This base option can be used for NTC used for the OTCB feature assuming system designer allows the PCB temperature to be higher than the cell temperature during balancing. Because the device does not differentiate which NTC is used on the cells versus the PCB, NTC biasing with this option scales the NTC's hot temperature curve differently, allowing the threshold set for OT comparator to be triggered at a lower GPIO voltage. Thus, making the device to only trigger OTCB threshold on this NTC.

The device does not require external RC for temperature measurement. However, it is common for system designer to add an RC filter on the GPIO pin for the NTC circuit. System designer can select the RC values for the application need. Example: R_{GPIO} = 1 kΩ, C_{GPIO} = 0.1 µF to 1 µF.

Unused GPIO must be grounded to AVSS with a 10-kΩ resistor.

Copyright © 2023 Texas Instruments Incorporated

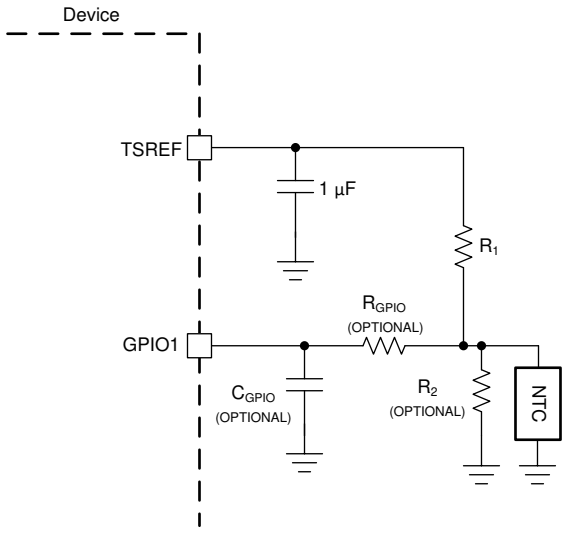

Figure 9-11. NTC Connection

9.2.1.2.6 Internal Balancing Current

When internal cell balancing is used, the max balancing current the device can support (before going into thermal pause) can vary based on the ambient temperature.

9.2.1.2.7 UART, NFAULT

The UART interface requires the TX and RX pins are pulled up through a 10-kΩ to 100-kΩ resistor. Do not leave TX and RX unconnected. The TX must be pulled high to prevent triggering an invalid communications frame during the idle state. When using a serial cable to connect to the host controller, connect the TX pull-up on the host side and the RX pull-up to the CVDD on the device side.

NFAULT pin for device, if not used, must be left floating. Otherwise, pull it up with 100-kΩ to CVDD.

Important note for NFAULT with <6S applications:

The number of active channels cannot be reduced below six. This means that unmasked faults on unused channels can cause NFAULT to assert. Follow the subsequent directions in order to prevent unused channels from causing unnecessary NFAULT assertions.

Disable the undervoltage checks on unused channels via the UV_DISABLE register. If this isn't used, the channels will always flag UV faults when the OVUV protector is enabled.

To disable the cell balancing diagnostic, set the balancing timer (registers CB_CELLn_CTRL) to 0s on unused channels. This will prevent the diagnostic from running on these channels.

There is no way to prevent open wire diagnostics from triggering faults on unused channels. If a system uses NFAULT, the open wire faults must be masked before running the diagnostics and the results must be read manually. Then the faults must be cleared and the masks disabled. Follow this procedure to run open wire checks:

1. Mask comparison faults via the MSK_COMP register
2. Turn on the VC pins (or CB pins) current sink or source through DIAG_COMP_CTRL3[OW_SNK1:0]
3. Wait for the expected dV/dt time of the external capacitor to deplete to the detection threshold if there is an open wire fault.
4. For VC open wire detection, select DIAP_COMP_CTRL3[COMP_ADC_SEL2:0] = OW CB check (that is, 0b011).
5. The device compares all active VCELL measurements (for VC open wire) or AUX CELL measurements (for CB open wire) against the [OW_THR3:0] threshold setting.

Copyright © 2023 Texas Instruments Incorporated

6. When the comparison is completed, ADC_STAT2[DRDY_VCOW] = 1 for VC open wire (or [DRDY_CBOW] = 1 for CB open wire). Host then turns off all current sinks and sources through DIAG_COMP_CTRL3[OW_SNK1:0]
7. Manually read the open wire fault registers (FAULT_COMP_VCOWx or FAULT_COMP_CBOWx)
8. The MCU should take action if used VC/CB channels indicate faults; ignore faults on unused VC/CB channels.
9. Clear faults
10. Unmask comparison faults via MSK_COMP

9.2.1.2.8 Current Sense Input

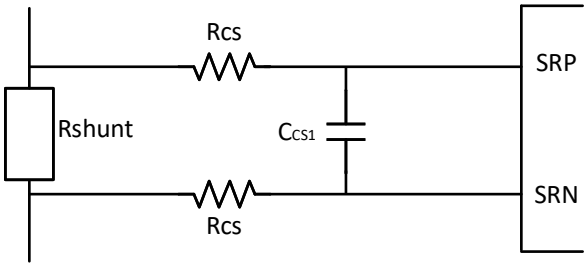

Figure 9-12. Current Sense Input Connection

It is recommended to add analog RC filter between shut resistor and device current sensing pins (SPR/SRN). This filter helps remove the high frequency components and improves the performance of current sensing ADC remove.

The selection of shut sensing resistor has many system level considerations, a few related to this device:

- Maximum current multiplied with R-shunt should be within Vcs_range absmax range.
- Maximum normal current multiplied with R-shunt should be within Vcs_range recommended range.
- To fully utilize the current sense ADC input range thus better resolution, it is preferred to choose higher value resistance, this is a tradeoff to thermal dissipation on the shut resistor.
- User can do room temp two points calibration to trim out room temp offset and gain error and store the coefficient in the device. Through this way, the residual error is offset drift and gain error drift.

Table 9-6. Current Sense Components

Related Pins	Components	Value	Description
SRP, SRN	Filter Resistor Rcs	10 Ohm	To avoid inducing large gain error, the value of this resistor needs to be less than 10ohm.
	Filter Capacitor Ccs1	0.47uF / 16V	Differential filtering capacitor, serves the purpose of filter differential noise. It is recommended to use value not less than 1uF.

It is not recommended to place a common mode capacitor between ground and SRP/SRN pins since this would couple ground noise to the input pin.

9.2.1.3 Application Curve

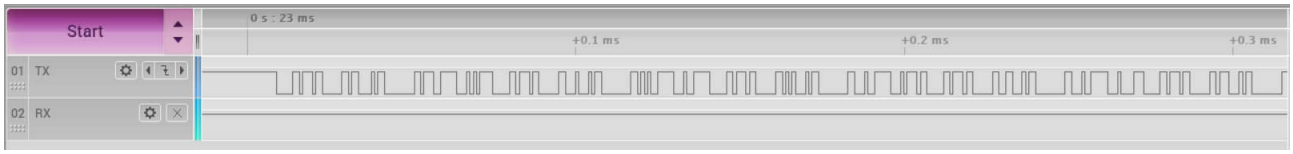

Figure 9-13. UART Write Command

Copyright © 2023 Texas Instruments Incorporated

10 Power Supply Recommendations

The device is powered by BAT pin and the LDOIN pin, with which the LDOIN pin is regulated by the pregulation circuit form with an external NPN. The device can be powered by a battery module as low as 9 V (without OTP programming) on the BAT pin. However, system designer must scale the R_{NPN} resistor accordingly to ensure there is sufficient headroom to have 6 V on the LDOIN pin after the IR drop across R_{NPN} and the external NPN. Example, if BAT voltage is at 9 V, the R_{NPN} reduces to 10 Ω to allow sufficient voltage at the LDOIN pin.

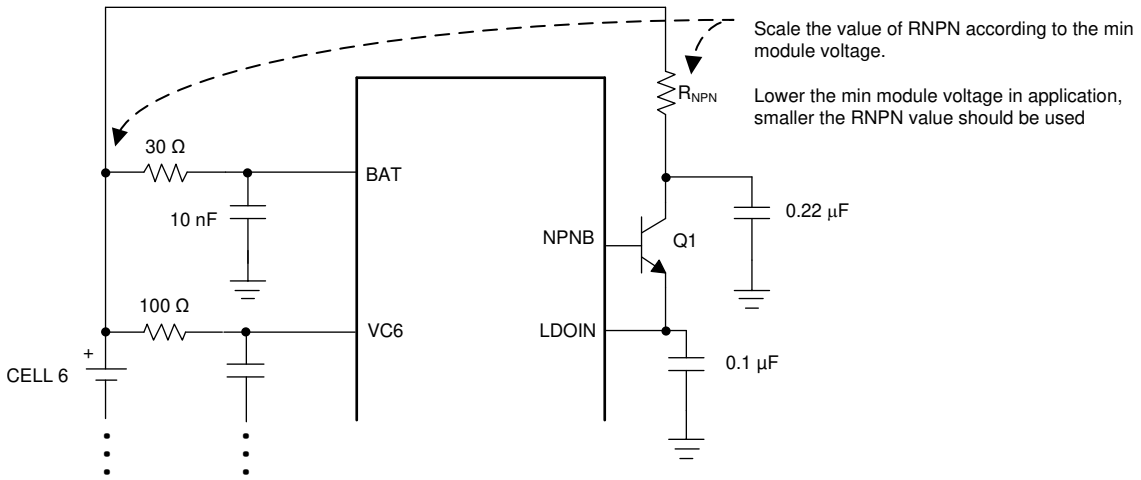

Figure 10-1. Device Powering Path

Copyright © 2023 Texas Instruments Incorporated

11 Layout

The layout for this device must be designed carefully. Any design outside these guidelines can affect the ADC accuracy and EMI performance. Care must be taken in the layout of signals to and from the device to avoid coupling noise onto sensitive inputs. The layout of ground and power connections, as well as communication signals, should also be made carefully.

11.1 Layout Guidelines

11.1.1 Ground Planes

It is very important to establish a clean grounding scheme to ensure best performance of the device. There are three ground pins (AVSS, DVSS, CVSS) for the device's internal power supplies and one ground reference (REFHM) for the precision reference. There are noisy grounds and quiet grounds that must be separated in the layout initially and re-joined together in a lower PCB layer. The external components (for example, bypass capacitors) must be tied to the proper grounding group if possible to keep the separation of noisy and quiet grounds apart.

- AVSS ground:
  - Bypass capacitor for these pins: BAT, VC0, CB0, and AVDD.
  - Package power pad.
- DVSS ground:
  - Bypass capacitor for DVDD.
  - GPIO filter capacitor (if used). It can also connect to AVSS ground plane, if needed.
- CVSS ground:
  - Bypass capacitor for GPIOs, CVDD, TSREF, NEG5V, LDOIN.
- REFHM ground:
  - Bypass capacitor for REFHP.
  - If possible, separate out REFHM from AVSS on the signal connection layer and re-connect REFHM to AVSS ground plane in the lower layer.

Even on a PCB layer that is mainly for signal routing, it is good practice to pour have a small island of ground pour if possible to provide a low-impedance ground, rather than simply a via through the ground trace to an lower ground plane.

Copyright © 2023 Texas Instruments Incorporated

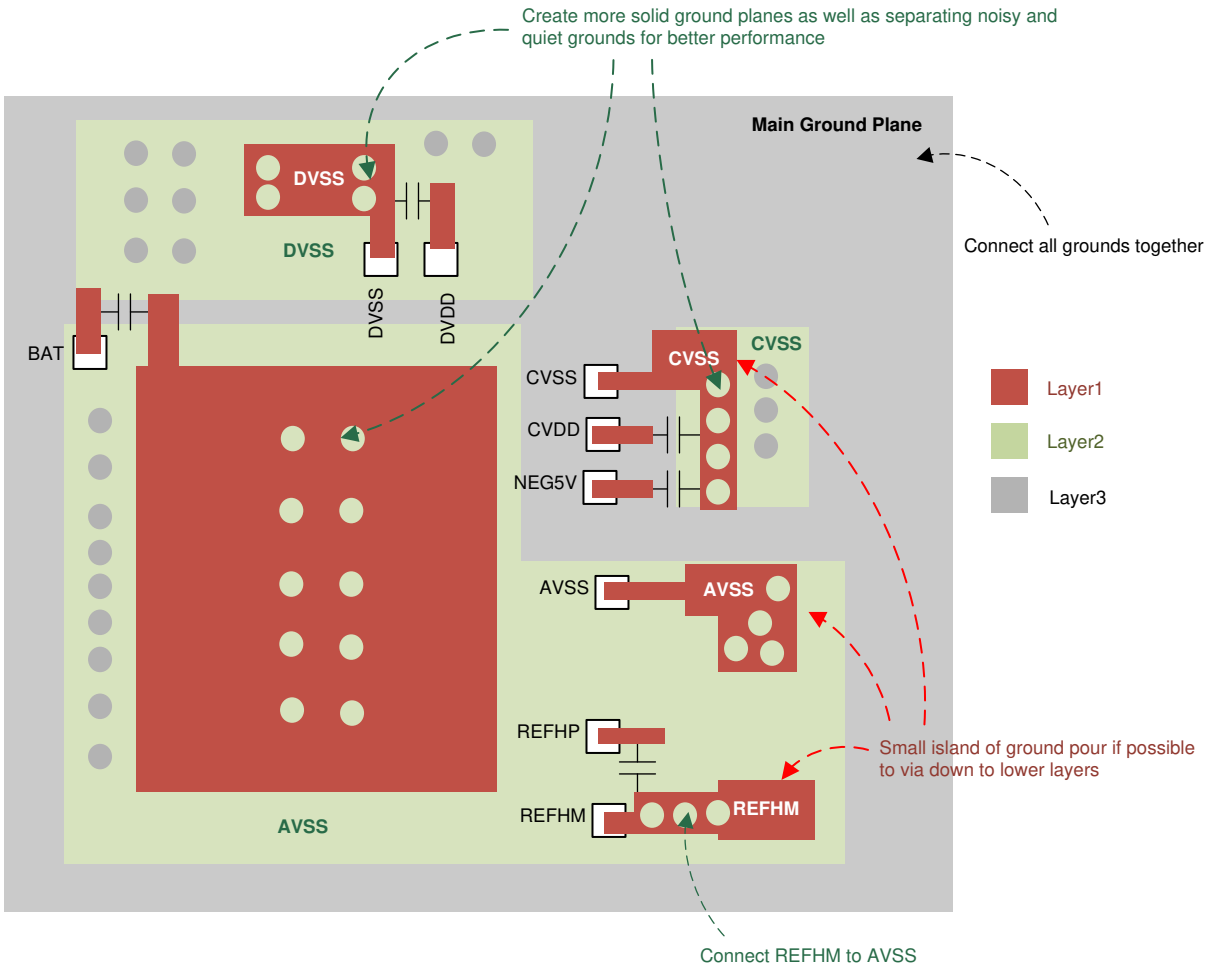

Figure 11-1. Grounding Layout Consideration

11.1.2 Bypass Capacitors for Power Supplies and Reference

The bypass capacitors of the following pins must be placed as close to the device pins as possible to ensure proper performance, especially for the REFHP capacitor.

- REFHP, BAT, LDOIN, AVDD, DVDD, CVDD, TSREF, and NEG5V

11.1.3 Cell Voltage Sensing

Cell voltage sensing traces (VC pins and CB pins) must be placed in parallel with impedance matching. The balancing traces (CB pins) must be sized properly to carry the maximum balancing current and proper thermal performance for the application.

It is recommended to use separate cables, connect tabs, and PCB traces for the BAT pin and top VC pin connections. Same applies to AVSS and VC0 connections. This avoids the device current impact on the top and bottom cell voltage measurements.

If the same cable and connector tab is used for BAT/top VC pins connection and AVSS/VC0 pins connection, the PCB trace going to BAT/top VC pins and AVSS/VC0 pins must be separated at the connector tabs. Note the device current will still go through the cell to the PCB cable, which may introduce IR errors across the cable connection to the top and bottom cell measurements.

11.2 Layout Example

This section presents the BQ79616-Q1 Evaluation Module (EVM) design as a layout example.

Copyright © 2023 Texas Instruments Incorporated

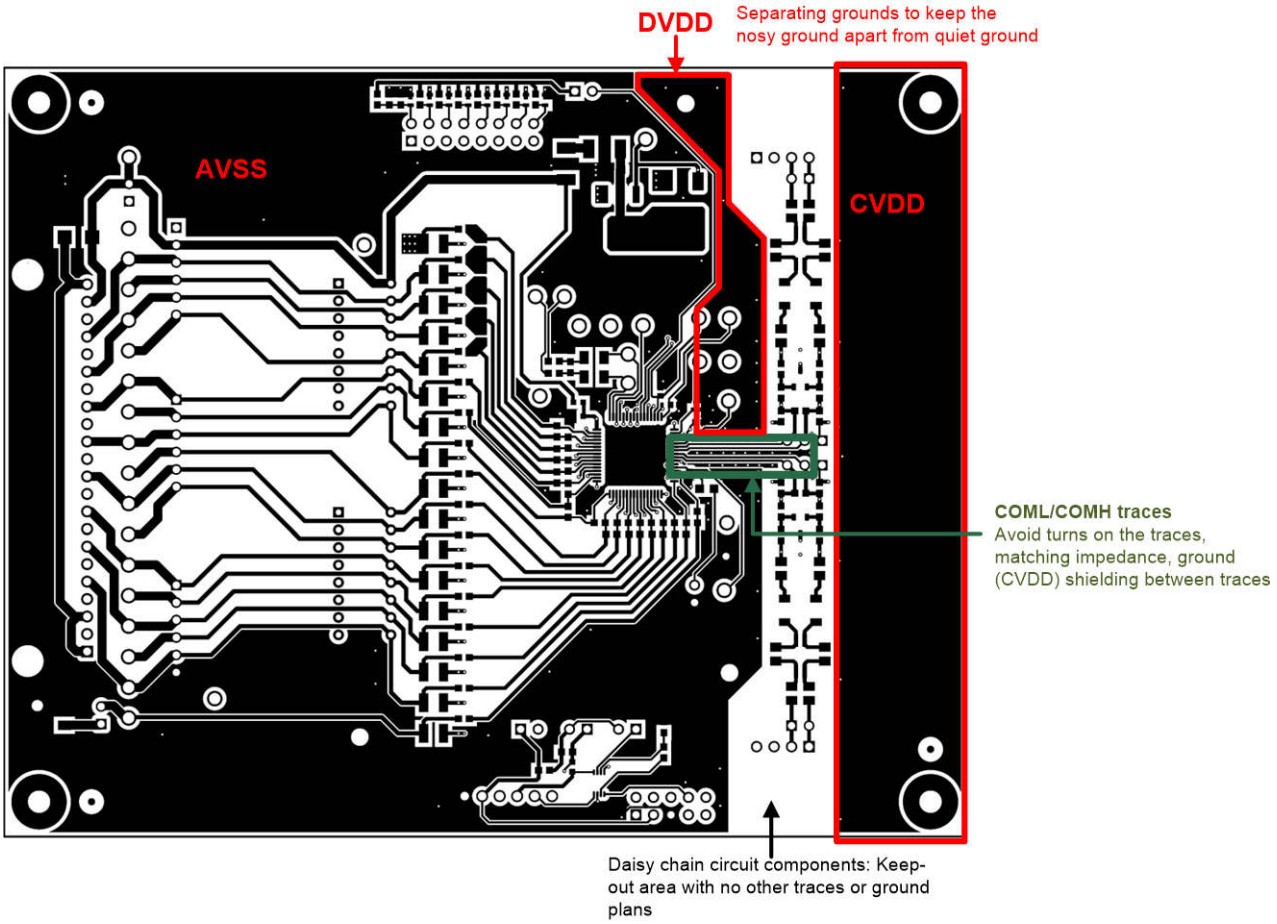

Figure 11-2. Top Signal Layer

Copyright © 2023 Texas Instruments Incorporated

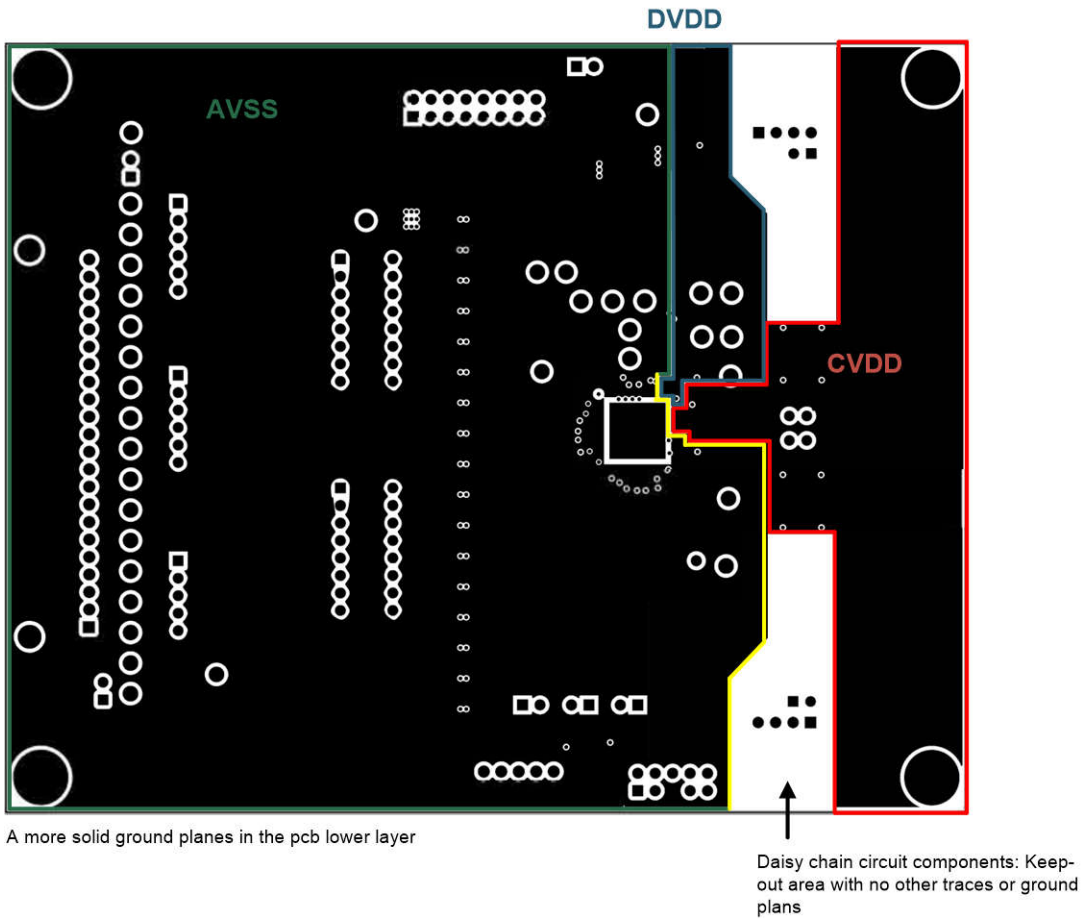

Figure 11-3. Second Layer with Solid, Separate Ground Planes

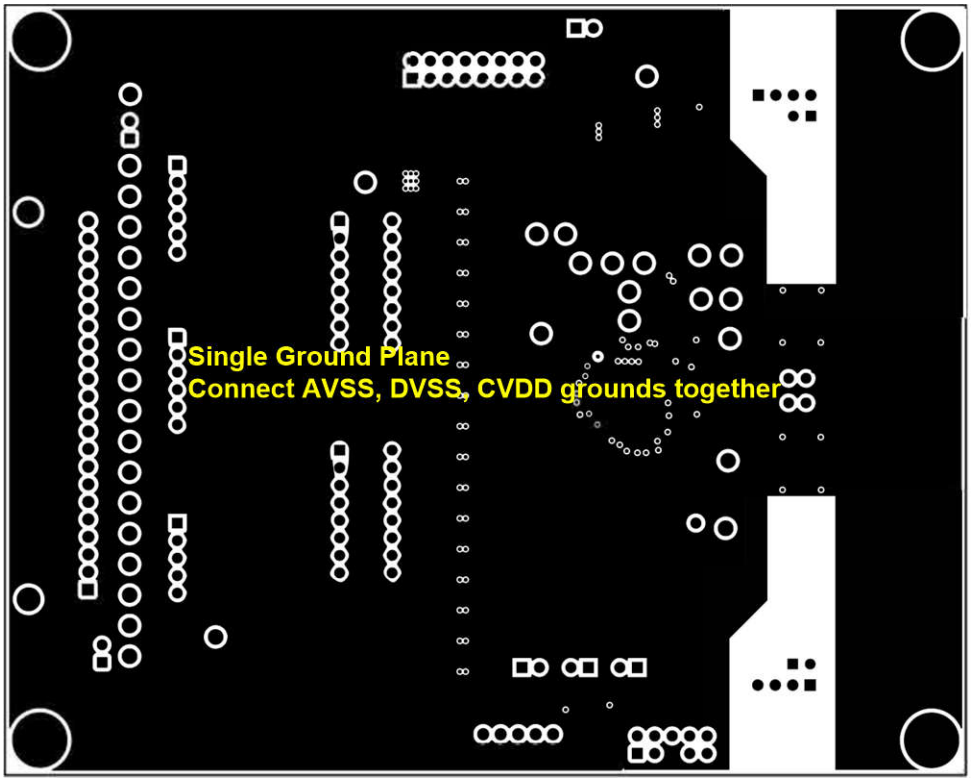

Figure 11-4. Thlrd Layer with Single Ground Plane

Copyright © 2023 Texas Instruments Incorporated

12 Device and Documentation Support

12.1 Device Support

12.1.1 Third-Party Products Disclaimer

TI'S PUBLICATION OF INFORMATION REGARDING THIRD-PARTY PRODUCTS OR SERVICES DOES NOT CONSTITUTE AN ENDORSEMENT REGARDING THE SUITABILITY OF SUCH PRODUCTS OR SERVICES OR A WARRANTY, REPRESENTATION OR ENDORSEMENT OF SUCH PRODUCTS OR SERVICES, EITHER ALONE OR IN COMBINATION WITH ANY TI PRODUCT OR SERVICE.

12.2 Receiving Notification of Documentation Updates

To receive notification of documentation updates, navigate to the device product folder on ti.com. Click on *Notifications* to register and receive a weekly digest of any product information that has changed. For change details, review the revision history included in any revised document.

12.3 Support Resources

TI E2E™ support forums are an engineer's go-to source for fast, verified answers and design help — straight from the experts. Search existing answers or ask your own question to get the quick design help you need.

Linked content is provided "AS IS" by the respective contributors. They do not constitute TI specifications and do not necessarily reflect TI's views; see TI's Terms of Use.

12.4 Trademarks

TI E2E™ is a trademark of Texas Instruments.
All trademarks are the property of their respective owners.

12.5 Electrostatic Discharge Caution



This integrated circuit can be damaged by ESD. Texas Instruments recommends that all integrated circuits be handled with appropriate precautions. Failure to observe proper handling and installation procedures can cause damage.

ESD damage can range from subtle performance degradation to complete device failure. Precision integrated circuits may be more susceptible to damage because very small parametric changes could cause the device not to meet its published specifications.

12.6 Glossary

TI Glossary	This glossary lists and explains terms, acronyms, and definitions.

Copyright © 2023 Texas Instruments Incorporated

13 Mechanical, Packaging, and Orderable Information

The following pages include mechanical, packaging, and orderable information. This information is the most current data available for the designated devices. This data is subject to change without notice and revision of this document. For browser-based versions of this data sheet, refer to the left-hand navigation.

Copyright © 2023 Texas Instruments Incorporated

PACKAGING INFORMATION

Orderable part number	Status (1)	Material type (2)	Package | Pins	Package qty | Carrier	RoHS (3)	Lead finish/ Ball material (4)	MSL rating/ Peak reflow (5)	Op temp (°C)	Part marking (6)
BQ756506PAPRQ1	Active	Production	HTQFP (PAP) | 64	1000 | LARGE T&R	Yes	NIPDAU	Level-3-260C-168 HR	-40 to 125	BQ756506
BQ756506PAPRQ1.A	Active	Production	HTQFP (PAP) | 64	1000 | LARGE T&R	Yes	NIPDAU	Level-3-260C-168 HR	-40 to 125	BQ756506

(1) **Status:** For more details on status, see our product life cycle.

(2) **Material type:** When designated, preproduction parts are prototypes/experimental devices, and are not yet approved or released for full production. Testing and final process, including without limitation quality assurance, reliability performance testing, and/or process qualification, may not yet be complete, and this item is subject to further changes or possible discontinuation. If available for ordering, purchases will be subject to an additional waiver at checkout, and are intended for early internal evaluation purposes only. These items are sold without warranties of any kind.

(3) **RoHS values:** Yes, No, RoHS Exempt. See the TI RoHS Statement for additional information and value definition.

(4) **Lead finish/Ball material:** Parts may have multiple material finish options. Finish options are separated by a vertical ruled line. Lead finish/Ball material values may wrap to two lines if the finish value exceeds the maximum column width.

(5) **MSL rating/Peak reflow:** The moisture sensitivity level ratings and peak solder (reflow) temperatures. In the event that a part has multiple moisture sensitivity ratings, only the lowest level per JEDEC standards is shown. Refer to the shipping label for the actual reflow temperature that will be used to mount the part to the printed circuit board.

(6) **Part marking:** There may be an additional marking, which relates to the logo, the lot trace code information, or the environmental category of the part.

Multiple part markings will be inside parentheses. Only one part marking contained in parentheses and separated by a "~" will appear on a part. If a line is indented then it is a continuation of the previous line and the two combined represent the entire part marking for that device.

Important Information and Disclaimer: The information provided on this page represents TI's knowledge and belief as of the date that it is provided. TI bases its knowledge and belief on information provided by third parties, and makes no representation or warranty as to the accuracy of such information. Efforts are underway to better integrate information from third parties. TI has taken and continues to take reasonable steps to provide representative and accurate information but may not have conducted destructive testing or chemical analysis on incoming materials and chemicals. TI and TI suppliers consider certain information to be proprietary, and thus CAS numbers and other limited information may not be available for release.

In no event shall TI's liability arising out of such information exceed the total purchase price of the TI part(s) at issue in this document sold by TI to Customer on an annual basis.

TAPE AND REEL INFORMATION

REEL DIMENSIONS

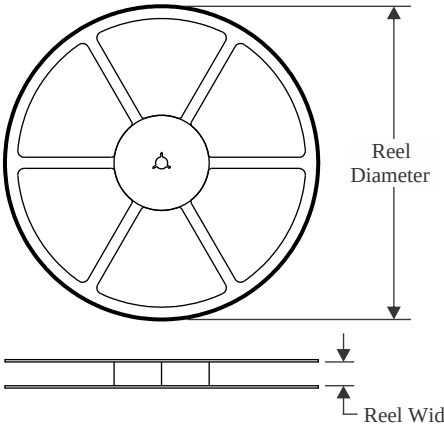

TAPE DIMENSIONS

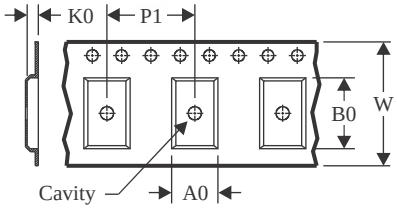

A0	Dimension designed to accommodate the component width
B0	Dimension designed to accommodate the component length
K0	Dimension designed to accommodate the component thickness
W	Overall width of the carrier tape
P1	Pitch between successive cavity centers

QUADRANT ASSIGNMENTS FOR PIN 1 ORIENTATION IN TAPE

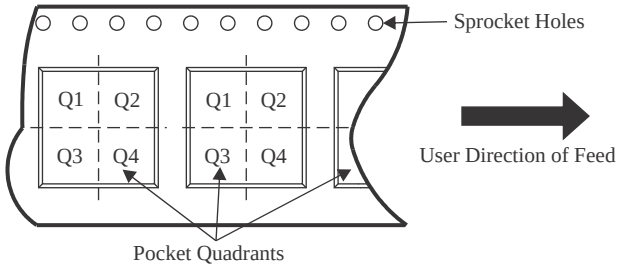

*All dimensions are nominal

Device	Package Type	Package Drawing	Pins	SPQ	Reel Diameter (mm)	Reel Width W1 (mm)	A0 (mm)	B0 (mm)	K0 (mm)	P1 (mm)	W (mm)	Pin1 Quadrant
BQ756506PAPRQ1	HTQFP	PAP	64	1000	330.0	24.4	13.0	13.0	1.5	16.0	24.0	Q2

TAPE AND REEL BOX DIMENSIONS

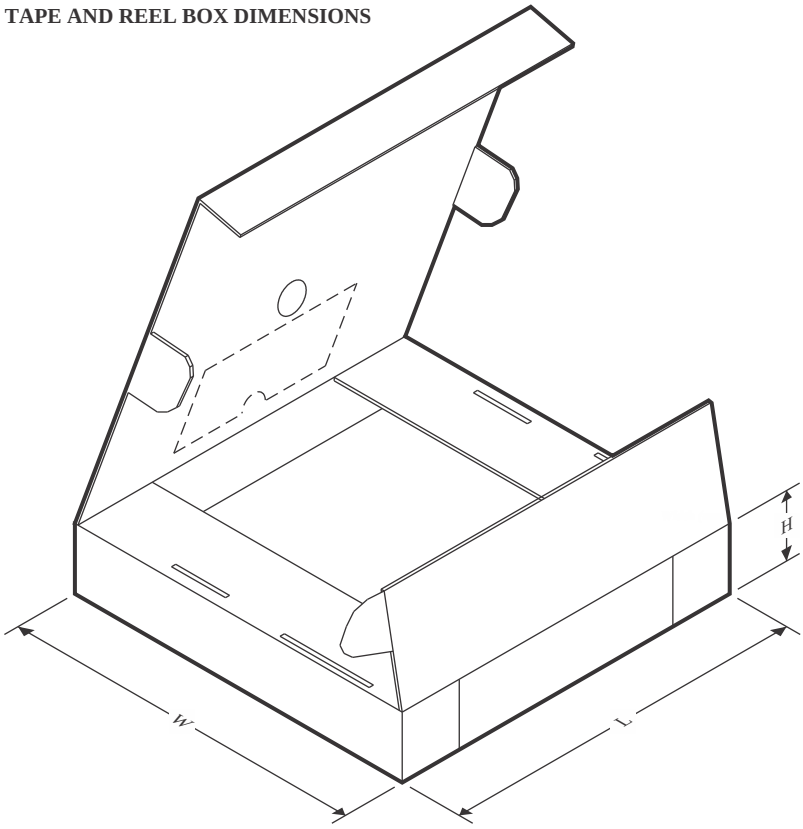

*All dimensions are nominal

Device	Package Type	Package Drawing	Pins	SPQ	Length (mm)	Width (mm)	Height (mm)
BQ756506PAPRQ1	HTQFP	PAP	64	1000	367.0	367.0	55.0

GENERIC PACKAGE VIEW

PAP 64

HTQFP - 1.2 mm max height

10 x 10, 0.5 mm pitch

QUAD FLATPACK

This image is a representation of the package family, actual package may vary.
Refer to the product data sheet for package details.

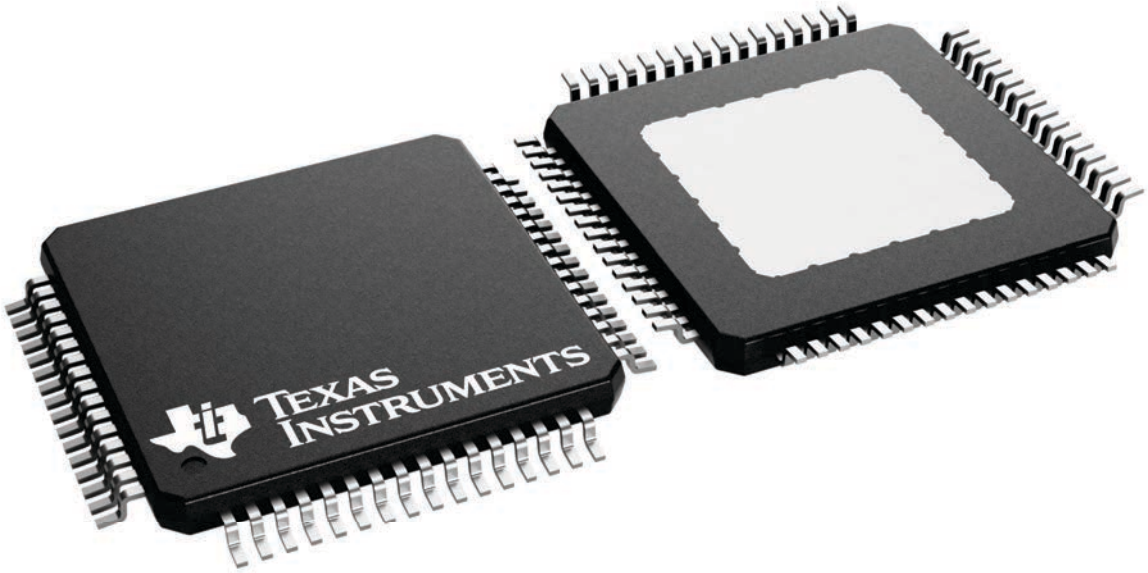

4226442/A

PACKAGE OUTLINE

PAP0064F

PowerPAD™ TQFP - 1.2 mm max height

PLASTIC QUAD FLATPACK

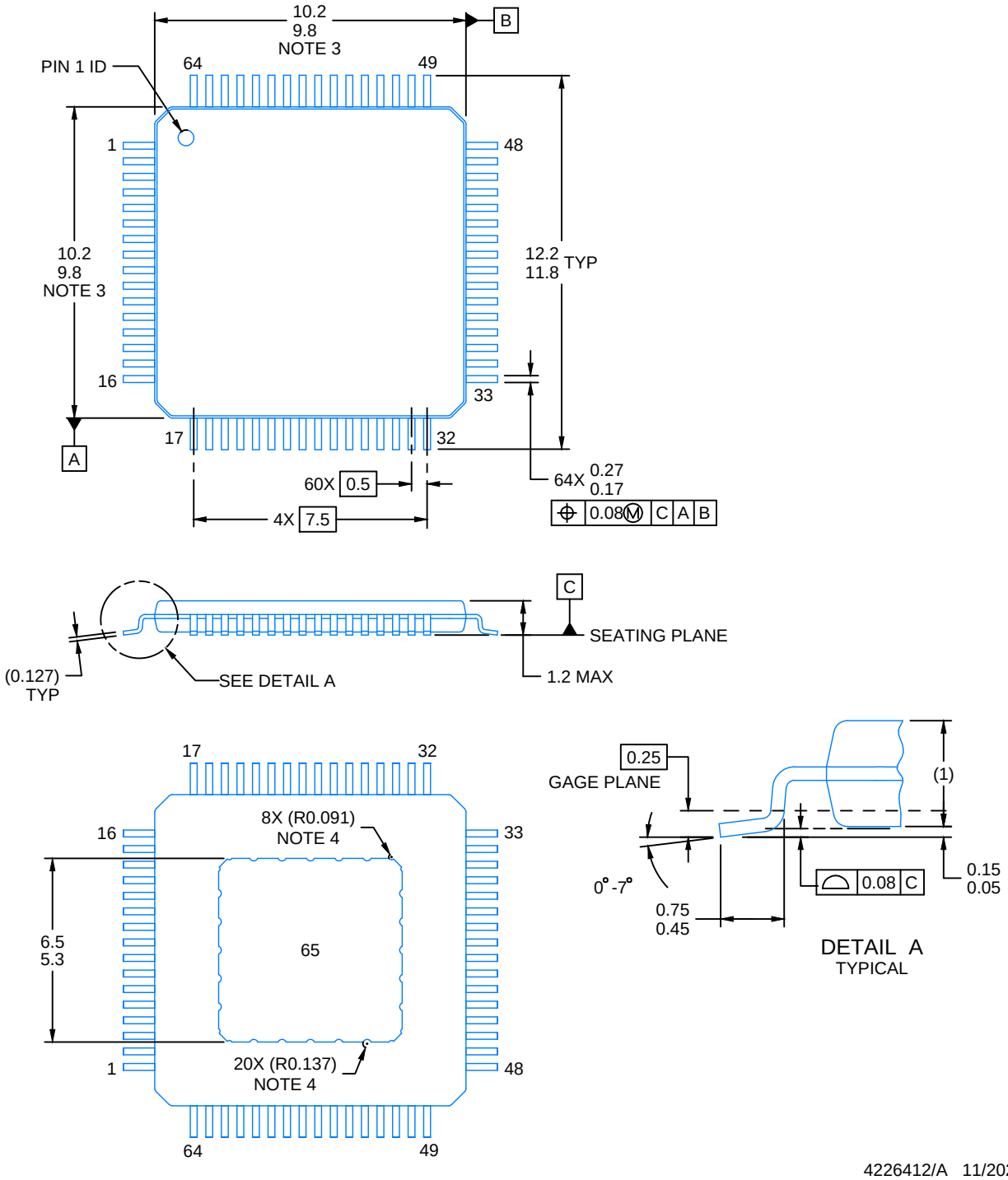

NOTES:

PowerPAD is a trademark of Texas Instruments.

1. All linear dimensions are in millimeters. Any dimensions in parenthesis are for reference only. Dimensioning and tolerancing per ASME Y14.5M.
2. This drawing is subject to change without notice.
3. This dimension does not include mold flash, protrusions, or gate burrs.
4. Strap features may not be present.
5. Reference JEDEC registration MS-026.

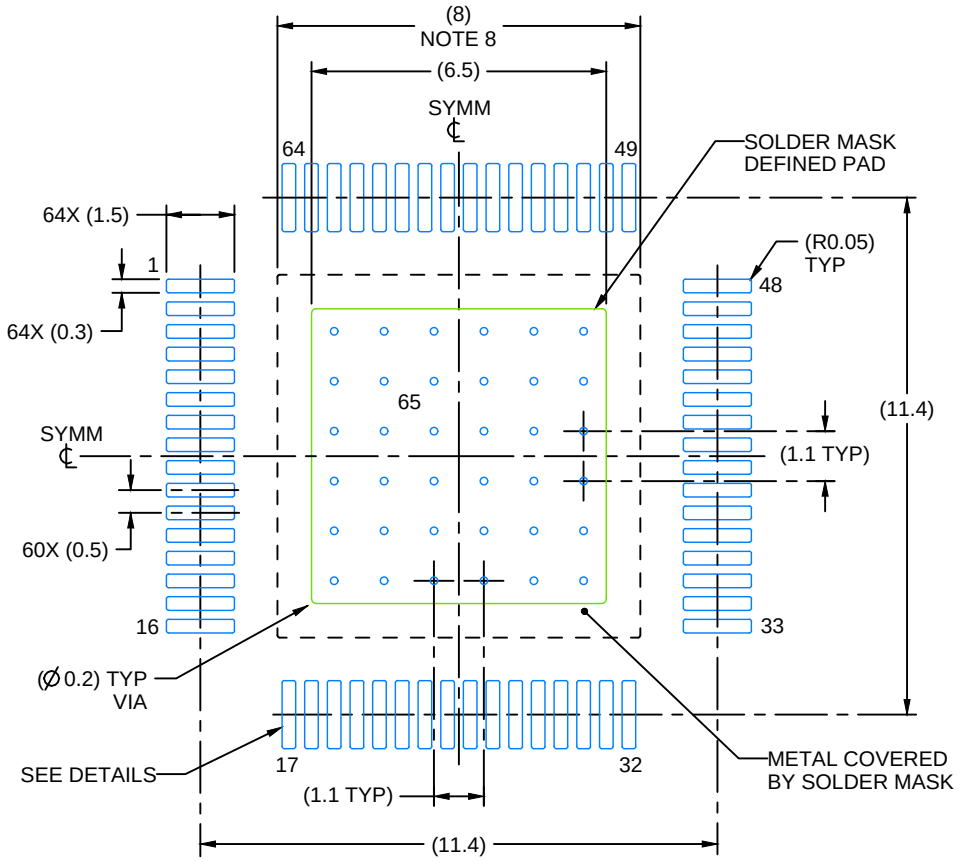

LAND PATTERN EXAMPLE
EXPOSED METAL SHOWN
SCALE:6X

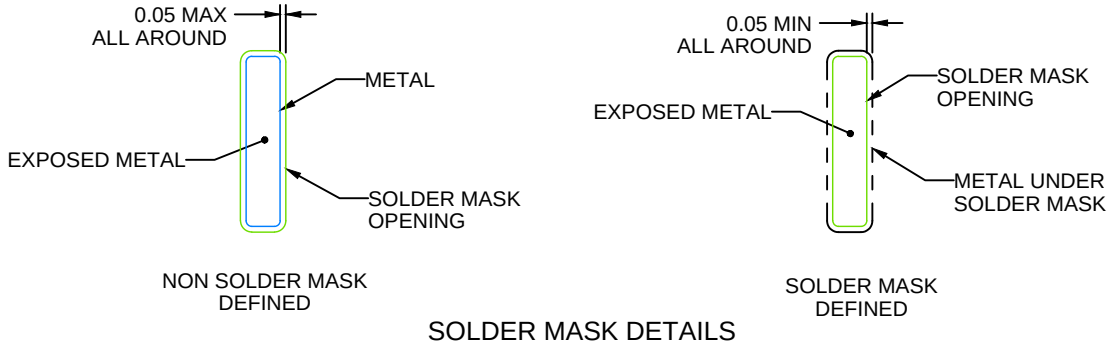

NON SOLDER MASK
DEFINED

SOLDER MASK
DEFINED

SOLDER MASK DETAILS

4226412/A 11/2020

NOTES: (continued)

6. Publication IPC-7351 may have alternate designs.
7. Solder mask tolerances between and around signal pads can vary based on board fabrication site.
8. This package is designed to be soldered to a thermal pad on the board. See technical brief, Powerpad thermally enhanced package, Texas Instruments Literature No. SLMA002 (www.ti.com/lit/slma002) and SLMA004 (www.ti.com/lit/slma004).
9. Vias are optional depending on application, refer to device data sheet. It is recommended that vias under paste be filled, plugged or tented.
10. Size of metal pad may vary due to creepage requirement.

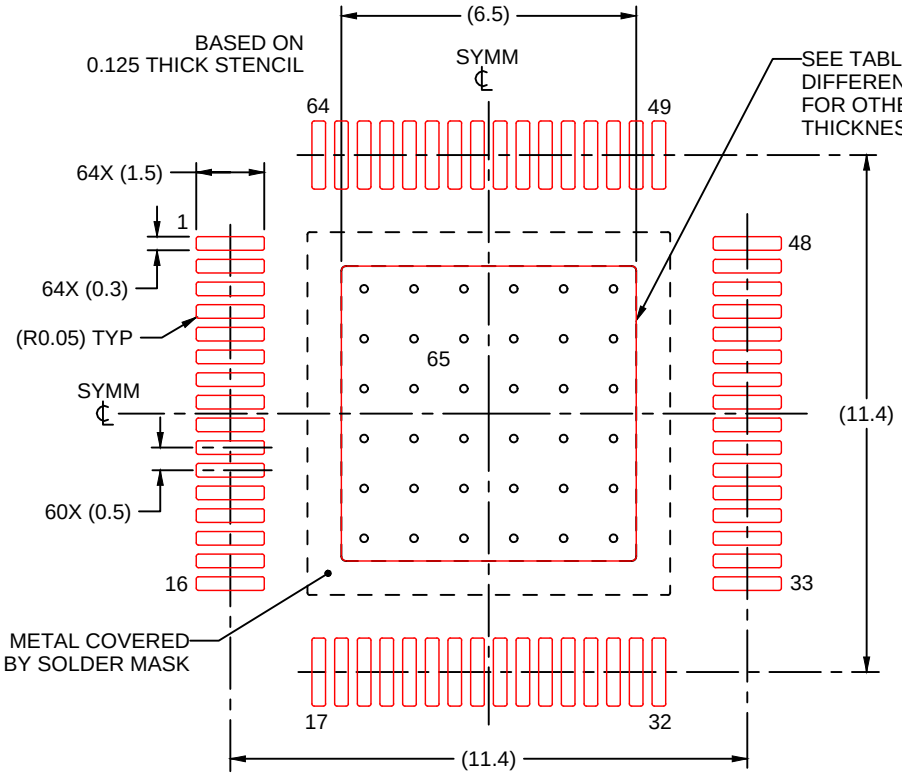

SOLDER PASTE EXAMPLE
EXPOSED PAD
100% PRINTED SOLDER COVERAGE BY AREA
SCALE:6X

STENCIL THICKNESS	SOLDER STENCIL OPENING
0.1	7.27 X 7.27
0.125	6.5 X 6.5 (SHOWN)
0.15	5.93 X 5.93
0.175	5.49 X 5.49

4226412/A 11/2020

NOTES: (continued)

11. Laser cutting apertures with trapezoidal walls and rounded corners may offer better paste release. IPC-7525 may have alternate design recommendations.
12. Board assembly site may have different recommendations for stencil design.

IMPORTANT NOTICE AND DISCLAIMER

TI PROVIDES TECHNICAL AND RELIABILITY DATA (INCLUDING DATASHEETS), DESIGN RESOURCES (INCLUDING REFERENCE DESIGNS), APPLICATION OR OTHER DESIGN ADVICE, WEB TOOLS, SAFETY INFORMATION, AND OTHER RESOURCES “AS IS” AND WITH ALL FAULTS, AND DISCLAIMS ALL WARRANTIES, EXPRESS AND IMPLIED, INCLUDING WITHOUT LIMITATION ANY IMPLIED WARRANTIES OF MERCHANTABILITY, FITNESS FOR A PARTICULAR PURPOSE OR NON-INFRINGEMENT OF THIRD PARTY INTELLECTUAL PROPERTY RIGHTS.

These resources are intended for skilled developers designing with TI products. You are solely responsible for (1) selecting the appropriate TI products for your application, (2) designing, validating and testing your application, and (3) ensuring your application meets applicable standards, and any other safety, security, regulatory or other requirements.

These resources are subject to change without notice. TI grants you permission to use these resources only for development of an application that uses the TI products described in the resource. Other reproduction and display of these resources is prohibited. No license is granted to any other TI intellectual property right or to any third party intellectual property right. TI disclaims responsibility for, and you fully indemnify TI and its representatives against any claims, damages, costs, losses, and liabilities arising out of your use of these resources.

TI’s products are provided subject to TI’s Terms of Sale, TI’s General Quality Guidelines, or other applicable terms available either on ti.com or provided in conjunction with such TI products. TI’s provision of these resources does not expand or otherwise alter TI’s applicable warranties or warranty disclaimers for TI products. Unless TI explicitly designates a product as custom or customer-specified, TI products are standard, catalog, general purpose devices.

TI objects to and rejects any additional or different terms you may propose.

Copyright © 2025, Texas Instruments Incorporated

Last updated 10/2025

ENTEGRECİ

Bu belge www.entegreci.com üzerinden sunulmaktadır.

Elektronik komponent tedarikinde Entegreci

Entegreci, Eskişehir merkezli, Türkiye geneline satış yapan bir elektronik komponent mağazasıdır. Entegreler (IC), mikrodenetleyiciler, transistörler, diyotlar, pasif elemanlar, konnektörler, modüller ve geliştirme kartları tek adetten seri üretim adetlerine kadar satılır. Ürün sayfalarında güncel stok durumunu, fiyatı ve datasheet bağlantısını bulabilirsiniz.

Parça koduyla arama

Üretici parça numarasını yazın; stok ve fiyatı hemen görün.

www.entegreci.com

Ürün kategorileri

Entegreden kapasitöre tüm elektronik komponent kategorileri.

Kategorilere göz atın

Üreticiler

Aradığınız üreticinin ürünlerini tek sayfada inceleyin.

Üreticileri görün

Toplu alım ve teklif

Listede olmayan ya da yüksek adetli parçalar için teklif isteyin.

Teklif isteyin

www.entegreci.com | **destek@entegreci.com** | **0850 305 90 34**

Entegreci is an online electronic components store based in Türkiye. Search by manufacturer part number to see stock, prices and datasheets for integrated circuits, microcontrollers, transistors, passive components and connectors, or request a quote for parts that are not listed.

Bu sayfa Entegreci tarafından eklenmiştir. Belgenin önceki sayfaları asıl yayıncısına aittir ve içeriği değiştirilmemiştir; en güncel sürüm için belgenin yayıncısına başvurun.