BQ298xx Voltage, Current, Temperature Protectors with an Integrated High-Side NFET Driver for Fast/Flash Charging Single-Cell Li-Ion and Li-Polymer Batteries

1 Features

- Voltage protection:
  - Overvoltage (OV): ±10mV
  - Undervoltage (UV): ±20mV
- Current protection:
  - Overcurrent in charge (OCC): ±1mV
  - Overcurrent in discharge (OCD): ±1mV
  - Short circuit in discharge (SCD): ±5mV
- Temperature protection:
  - Overtemperature (OT)
- Additional features:
  - Supports as low as a 1mΩ sense resistor (R_{SNS})
  - High-side protection
  - High Vgs FET drive
  - 0V charging (only BQ2980)
  - CTR pin for FET override control for system reset/shutdown
  - Configure CTR for second OT protection through an external PTC thermistor
- Current consumption:
  - NORMAL mode: 4µA
  - SHUTDOWN mode: 0.1µA maximum
- Package:
  - 8pin X2QFN: 1.50 × 1.50 × 0.37mm

2 Applications

- Smartphones
- Tablets
- Power bank
- Wearables

3 Description

The BQ298xx family of devices, featuring integrated charge-pump FET drivers, provides high-side primary battery cell protection for 1-series Li-ion and Li-polymer batteries, enabling consistent Rdson across cell voltages. For better system thermal performance, the BQ298xx device's accuracy enables the use of a sense resistor as low as 1mΩ.

The CTR pin in the BQ298xx device can be configured to override the FET driver by host control to create a system reset or shutdown function. Alternatively, the CTR pin can be configured to connect an external Positive Temperature Coefficient (PTC) thermistor for FET OT protection in addition to the internal die temperature sensor. The BQ2980xx devices support zero-volt (0V) charging, while the BQ2982xx devices have this disabled.

Package Information

PART NUMBER(1)	PACKAGE	BODY SIZE (NOM)
BQ2980xx	X2QFN	1.50mm × 1.50mm × 0.37mm
BQ2982xx	X2QFN	1.50mm × 1.50mm × 0.37mm

(1) For all available packages, see the orderable addendum and Device Comparison Table.

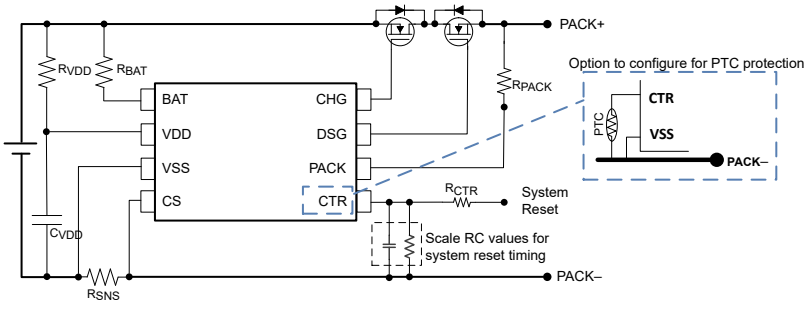

Simplified Schematic

An IMPORTANT NOTICE at the end of this data sheet addresses availability, warranty, changes, use in safety-critical applications, intellectual property matters and other important disclaimers. PRODUCTION DATA.

Table of Contents

1 Features....1
2 Applications....1
3 Description....1
4 Device Comparison Table....3
5 Pin Configuration and Functions....4
6 Specifications....5
6.1 Absolute Maximum Ratings....5
6.2 ESD Ratings....5
6.3 Recommended Operating Conditions....5
6.4 Thermal Information....6
6.5 Electrical Characteristics....6
6.6 Typical Characteristics....9
7 Detailed Description....10
7.1 Overview....10
7.2 Functional Block Diagram....11
7.3 Feature Description....11
7.4 Device Functional Modes....14
8 Application and Implementation....15
8.1 Application Information....15
8.2 Typical Applications....18
9 Power Supply Recommendations....21
10 Layout....22
10.1 Layout Guidelines....22
10.2 Layout Example....22
11 Device and Documentation Support....23
11.1 Third-Party Products Disclaimer....23
11.2 Receiving Notification of Documentation Updates....23
11.3 Support Resources....23
11.4 Trademarks....23
11.5 Electrostatic Discharge Caution....23
11.6 Glossary....23
12 Revision History....23
13 Mechanical, Packaging, and Orderable Information....25

Copyright © 2026 Texas Instruments Incorporated

4 Device Comparison Table

BQ298xx Device Family (BQ2980xx with ZVCHG [0V Charging] Enabled, BQ2982xx with ZVCHG Disabled)													
PART NUMBER	OVP (V)	OVP DELAY (s)	UVP (V)	UVP DELAY (ms)	OCC (mV)	OCC DELAY (ms)	OCD (mV)	OCD DELAY (ms)	SCD (mV)	SCD DELAY (µs)	OT (°C)	CTR/ PTC Config	UV_Shut
BQ298000	4.475	1.25	2.600	144	–8	8	8	8	20	250 Fixed	85	CTR	Enabled
BQ298006	4.475	1.00	2.500	20	–12	16	14	16	40	250 Fixed	75	CTR	Enabled
BQ298009	4.500	1.00	2.900	20	–18	8	30	16	40	250 Fixed	Disable	CTR	Enabled
BQ298010	4.500	1.00	2.900	20	–10	8	20	16	30	250 Fixed	Disable	CTR	Enabled
BQ298012	4.300	1.00	2.750	144	–4	8	14	20	30	250 Fixed	Disable	CTR	Enabled
BQ298014	4.250	1.00	2.600	96	-30	8	10	20	30	250 Fixed	Disable	CTR	Enabled
BQ298015	4.440	1.25	2.800	144	–8	8	8	8	20	250 Fixed	85	CTR	Enabled
BQ298018	4.400	1.00	2.700	144	–8	8	20	48	60	250 Fixed	85	CTR	Enabled
BQ298019	4.425	1.25	2.800	144	–30	48	8	48	40	250 Fixed	85	CTR	Enabled
BQ298023	4.520	1.25	2.800	144	–12	8	12	8	30	250 Fixed	85	CTR	Enabled
BQ298215	4.440	1.25	2.800	144	–8	8	8	8	20	250 Fixed	85	CTR	Enabled
BQ298216	4.300	1.00	2.500	144	–4	8	14	20	30	250 Fixed	Disabled	CTR	Enabled
BQ298217	4.250	1.25	2.600	125	-36	8	60	16	200	250 Fixed	Disabled	CTR	Enabled
BQ298218	4.200	1.25	2.500	125	-18	20	40	20	120	250 Fixed	75	PTC 5MΩ Pullup Enabled	Enabled
BQ298xx(1)	3.750 – 5.200	0.25, 1.0, 1.25, 4.5	2.200 – 3.000	20, 96, 125, 144	4 – 64	8, 16, 20, 48	4 – 64	8, 16, 20, 48	10, 20, 30, 40, 60, 120, 200	250 Fixed	75, 85	CTR, PTC with 1.5MΩ, 5MΩ, or 8MΩ Pullup Enabled	Enabled, Disabled

(1) Contact TI for orderable device information.

Copyright © 2026 Texas Instruments Incorporated

5 Pin Configuration and Functions

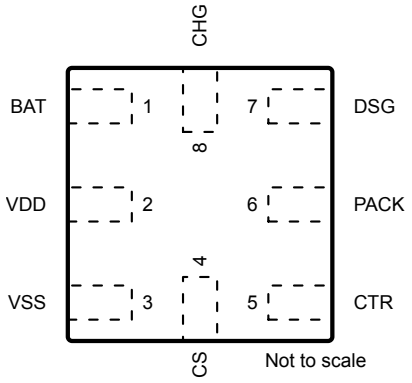

Figure 5-1. RUG Package8-Pin X2QFNTop View

Table 5-1. Pin Functions

NUMBER	NAME	TYPE	DESCRIPTION
1	BAT	I(1)	BAT voltage sensing input (connected to the battery side)
2	VDD	P	Supply voltage
3	VSS	—	Device ground
4	CS	I	Current sensing input (connect to PACK– side of the sense resistor)
5	CTR	I	Active high control pin to open FET drivers and shut down the device. It can be configured to enable an internal pull-up and connect the CTR pin to an external PTC for OT protection.
6	PACK	I	Pack voltage sensing pin (connected to the charger side, typically referred to as PACK+ and PACK–)
7	DSG	O	DSG FET driver
8	CHG	O	CHG FET driver

(1) I = input, O = output, P = power

Copyright © 2026 Texas Instruments Incorporated

6 Specifications

6.1 Absolute Maximum Ratings

over operating free-air temperature range (unless otherwise noted)(1)

		MIN	MAX	UNIT
Supply voltage	VDD	–0.3	6	V
Input voltage	PACK	–0.3	24	V
	BAT	–0.3	6	
	CS	–0.3	0.3	
	CTR	–0.3	5	
Output voltage	CHG	–0.3	20	V
	DSG	–0.3	20	
Storage temperature, T_{stg}		–55	150	°C

(1) Operation outside the Absolute Maximum Ratings may cause permanent device damage. Absolute Maximum Ratings do not imply functional operation of the device at these or any other conditions beyond those listed under Recommended Operating Conditions. If outside the Recommended Operating Conditions but within the Absolute Maximum Ratings, the device may not be fully functional, and this may affect device reliability, functionality, performance, and shorten the device lifetime.

6.2 ESD Ratings

			VALUE	UNIT
$V_{(ESD)}$	Electrostatic discharge	Human-body model (HBM), per ANSI/ESDA/JEDEC JS-001(1)	±1000	V
		Charged-device model (CDM), per JEDEC specification JESD22-C101(2)	±250	

(1) JEDEC document JEP155 states that 500V HBM allows safe manufacturing with a standard ESD control process.
(2) JEDEC document JEP157 states that 250V CDM allows safe manufacturing with a standard ESD control process.

6.3 Recommended Operating Conditions

over operating free-air temperature range (unless otherwise noted)

		MIN	MAX	UNIT
Supply voltage	VDD	1.5	5.5	V
Input voltage	PACK	0	20	V
	BAT	1.5	5.5	
	CS	–0.25	0.25	
	CTR	0	5	
Output voltage	CHG	V_{SS}	VDD + VDD × A_{FETON}	V
	DSG	V_{SS}	VDD + VDD × A_{FETON}	
Operating temperature, T_A		–40	85	°C

Copyright © 2026 Texas Instruments Incorporated

6.4 Thermal Information

THERMAL METRIC[1]		BQ2980xx/BQ2982xx RUG (X2QFN) 8 PINS	UNIT
$R_{\theta JA}$	Junction-to-ambient thermal resistance	171.8	°C/W
$R_{\theta JC(top)}$	Junction-to-case (top) thermal resistance	75	°C/W
$R_{\theta JB}$	Junction-to-board thermal resistance	94.7	°C/W
ψ_{JT}	Junction-to-top characterization parameter	2.5	°C/W
ψ_{JB}	Junction-to-board characterization parameter	94.9	°C/W

(1) For more information about traditional and new thermal metrics, see the *Semiconductor and IC Package Thermal Metrics* application report.

6.5 Electrical Characteristics

Typical values stated at T_A = 25°C and VDD = 3.6V. MIN/MAX values stated with T_A = –40°C to +85°C and VDD = 3 to 5V unless otherwise noted.

PARAMETER		TEST CONDITIONS	MIN	TYP	MAX	UNIT
SUPPLY CURRENT CONSUMPTION						
I_{NORMAL}	Normal mode supply current	V_{CHG} and V_{DSG} > 5V, C_{LOAD} = 8nF (typical 20nA[1]), VDD > 4.0V		5	8	µA
		V_{CHG} and V_{DSG} > 5V, C_{LOAD} = 8nF (typical 20 nA[1]), UVP < VDD < 3.9V		4	6	µA
I_{FETOFF}	Supply current with both FET drivers off	V_{CHG} = V_{DSG} ≤ 0.2V		2	4	µA
I_{SHUT}	Shutdown current	V_{PACK} < VBAT, VDD = 1.5V			0.1	µA
N-CH FET DRIVER, CHG and DSG						
A_{FETON}	FET driver gain factor, the Vgs voltage to FET	V_{CHG} or V_{DSG} = VDD + VDD × A_{FETON} UVP < VDD < 3.9V C_{LOAD} = 8nF	1.65	1.75	1.81	V/V
		V_{CHG} or V_{DSG} = VDD + VDD × A_{FETON} VDD > 4.0 V C_{LOAD} = 8 nF	1.45	1.55	1.68	V/V
V_{FETOFF}	FET driver off output voltage	V_{FETOFF} = V_{CHG} – VSS or V_{DSG} – VSS C_{LOAD} = 8nF			0.2	V
V_{DRIVER_SHUT}	FET driver charge pump shut down voltage	Charge pump enabled when VDD rises to V_{DRIVER_SHUT}	1.95	2	2.1	V
$V_{DRIVER_SHUT_HYS}$	FET driver charge pump shut down voltage hysteresis	Charge pump disabled when VDD falls to V_{DRIVER_SHUT} – $V_{DRIVER_SHUT_HYS}$		50		mV
t_{rise}[2]	FET driver rise time	C_{LOAD} = 8nF, V_{CHG} or V_{DSG} rises from VDD to (2 × VDD)		400	800	µs
t_{fall}	FET driver fall time	C_{LOAD} = 8nF, V_{CHG} or V_{DSG} fall to V_{FETOFF}		50	200	µs
I_{LOAD}	FET driver maximum loading				10	µA
VOLTAGE PROTECTION						
V_{OVP}	Overvoltage detection range	Factory configured, 50mV step	3750		5200	mV
V_{OVP_ACC}	Overvoltage detection accuracy	T_A = 25°C, CHG/DSG C_{LOAD} < 1µA	–10		10	mV
		T_A = 0°C to 60°C, CHG/DSG C_{LOAD} < 1µA	–15		15	
		T_A = –40°C to +85°C, CHG/DSG C_{LOAD} < 1µA	–25		25	
V_{OVP_HYS}	Overvoltage release hysteresis voltage	Fixed at 200mV	150	200	250	mV

Copyright © 2026 Texas Instruments Incorporated

6.5 Electrical Characteristics (continued)

Typical values stated at T_A = 25°C and VDD = 3.6V. MIN/MAX values stated with T_A = –40°C to +85°C and VDD = 3 to 5V unless otherwise noted.

PARAMETER		TEST CONDITIONS	MIN	TYP	MAX	UNIT
V_{UVP}	Undervoltage detection range	Factory configured, 50mV step	2200		3000	mV
V_{UVP_ACC}	Undervoltage detection accuracy	T_A = 25°C	–20		20	mV
		T_A = 0°C to 60°C	–30		30	mV
		T_A = –40°C to +85°C	–50		50	mV
V_{UVP_HYS}	Undervoltage release hysteresis voltage	Fixed at 200mV	150	200	250	mV
$R_{PACK-VSS}$	Resistance between PACK and VSS during UV fault		100	300	550	kΩ
CURRENT PROTECTION						
V_{OC}	Overcurrent in charge (OCC) and discharge (OCD) range	Factory configured, 2mV step. For OCC, the range is negative (min = –64, max = –4).	4		64	mV
V_{SCD}	Short circuit in discharge threshold	Factory configured		10		mV
				20		
				30		
				40		
				60		
				120		
				200		
V_{OC_ACC}	Overcurrent (OCC, OCD1, OCD2, SCD) detection accuracy	< 20mV	–1		1	mV
		20 to approximately 5 mV	–3	2	3	
		56 to approximately 100mV	–5		5	
		> 100mV	–12		12	
$I_{PACK-VDD}$	Current sink between PACK and VDD during current fault. Used for load removal detection		8		24	µA
I_{OCD_REC}	OCD, SCD recovery detection current	Sum of current from VDD and BAT during OCD or SCD fault			55	µA
V_{OC_REL}	OCC fault release threshold	(V_{BAT} – V_{PACK})		100		mV
	OCD, SCD fault release threshold	(V_{PACK} – V_{BAT})		–400		mV
OVERTEMPERATURE PROTECTION[2]						
T_{OT}	Internal overtemperature threshold	Factory configured		75		°C
				85		
T_{OT_ACC}	Internal overtemperature detection accuracy		–10		10	°C
T_{OT_HYS}	Internal overtemperature hysteresis		8	15	22	°C
PROTECTION DELAY[2]						
t_{OVP}	Overvoltage detection delay	Factory configured	0.2	0.25	0.3	s
			0.8	1	1.2	
			1	1.25	1.5	
			3.6	4.5	5.4	

Copyright © 2026 Texas Instruments Incorporated

6.5 Electrical Characteristics (continued)

Typical values stated at T_A = 25°C and VDD = 3.6V. MIN/MAX values stated with T_A = –40°C to +85°C and VDD = 3 to 5V unless otherwise noted.

PARAMETER		TEST CONDITIONS	MIN	TYP	MAX	UNIT
t_{UVP}	Undervoltage detection delay	Factory configured	16	20	24	ms
			76.8	96	115.2	
			100	125	150	
			115.2	144	172.8	
t_{OC}	Overcurrent (OCC, OCD) detection delay	Factory configured	5.6	8	10.5	ms
			12.4	16	19.6	
			16	20	24	
			38.4	48	57.6	
t_{SCD}	Short circuit discharge detection delay	Fixed configuration	125	250	375	µs
t_{OT}	Overtemperature detection delay	Fixed configuration	3.6	4.5	5.4	s
FET OVERRIDE/DEVICE SHUTDOWN CONTROL, CTR						
V_{IH}	High-level input		1			V
V_{IL}	Low-level input				0.4	V
V_{HYS}	Hysteresis for V_{IH} and V_{IL}		200			mV
R_{PULL_UP}	Effective Internal pull-up resistance (to use with external PTC)	Factory configured if enabled		1.5		MΩ
				5		
				8		
ZVCHG (0V Charging)						
V_{0CHGR}	Charger voltage requires to start 0V charging	BQ2980xx only (ZVCHG is disabled in BQ2982xx). The CHG driver becomes high impedance when VDD < V_{0INH}.	2			V
V_{0INH}	Battery voltage that inhibits 0V charging				1	V

(1) I_{NORMAL} is impacted by the efficiency of the charge pump driving the CHG and DSG FETs. An ultra-low-gate-leakage FET may be required. I_{NORMAL} can be significantly higher with FETs with typical I_{GSS} values of 10µA. See *Selection of Power FET* for more details.
(2) Specified by design.

Copyright © 2026 Texas Instruments Incorporated

6.6 Typical Characteristics

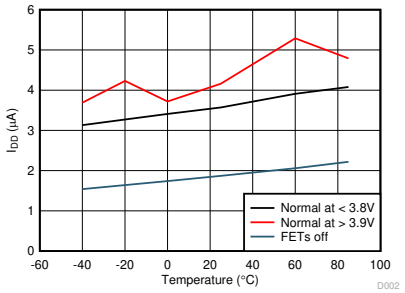

Figure 6-1. Normal and FET Off Current Across Temperature

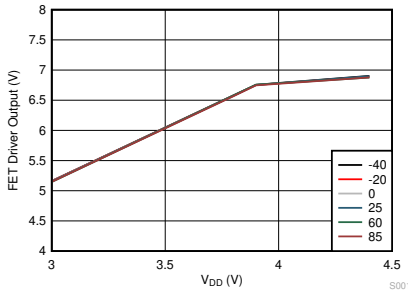

Figure 6-2. CHG and DSG Output (Loading with an 8-nF Capacitor on CHG and DSG) Across VDD

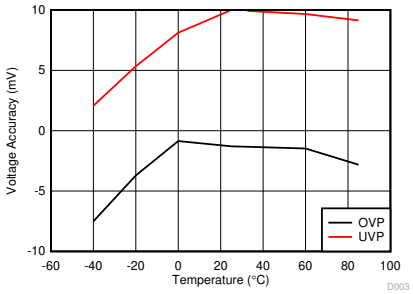

Figure 6-3. Overvoltage and Undervoltage Accuracy Across Temperature

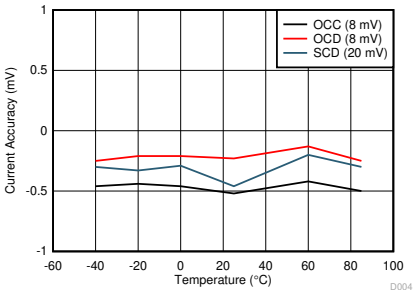

Figure 6-4. Overcurrent Accuracy Across Temperature

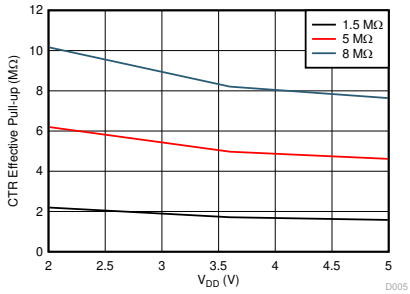

Figure 6-5. CTR Internal Pull-Up Resistor (if Configured) Across VDD

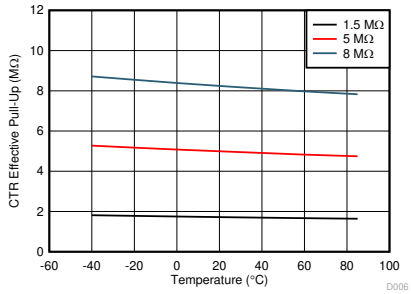

Figure 6-6. CTR Internal Pull-Up Resistor (if Configured) Across Temperature (VDD at 3.6V)

7 Detailed Description

7.1 Overview

The BQ298xx devices are high-side single-cell protectors designed to improve thermal performance by reducing power dissipation across the protection FETs. This is achieved with high-side protection with a built-in charge pump to provide higher Vgs to the FET gate voltage to reduce FET Rdson. Additionally, the device supports as low as a 1mΩ sense resistor with ±1mV accuracy, resulting in lower heat dissipation at the sense resistor without compromising current accuracy.

The BQ298xx device implements a CTR pin that allows external control to open the power FETs, as well as shut down the device for low power storage. Optionally, the CTR pin can be configured to connect to a PTC and be used for overtemperature protection.

7.1.1 Device Configurability

Table 7-1 provides guidance on possible configurations of the BQ2980 and BQ2982 devices.

Note

Texas Instruments preprograms devices: Devices are not intended to be further customized by the customer.

Table 7-1. Device Configuration Range

FAULT		RANGE	STEP SIZE	UNIT	DELAY SELECTION	CHG, DSG STATUS	RECOVERY DESCRIPTION (Non-Configurable)
OV	Overvoltage	3750 – 5200	50	mV	0.25, 1, 1.25, 4.5 s	CHG OFF	(200-mV hysteresis AND charger removal) OR (below OV threshold AND discharge load is detected)
UV	Undervoltage	2200 – 3000	50	mV	20, 96, 125, 144 ms	Option 1: UV_SHUT enable The device goes into SHUTDOWN.	(200-mV hysteresis AND discharge load is removed before device shuts down) OR (above UV threshold AND charger connection)
						Option 2: UV_SHUT disable DSG off, power consumption drops to I_{FETOFF}, and the device does not shut down.	(200-mV hysteresis) OR (above UV threshold AND charger connection)
OCC	Overcurrent in Charge	–64 – –4	2	mV	8, 16, 20, 48 ms	CHG OFF	Detect a charger removal (V_{BAT} – V_{PACK}) > 100-mV typical
OCD	Overcurrent in Discharge	4 – 64	2	mV		DSG OFF	Detect a discharge load removal (V_{BAT} – V_{PACK}) < 400-mV typical
SCD	Short circuit in discharge	10, 20, 30, 40, 60, 120, 200	—	mV	Fixed 250 µs		
OT	Overtemperature (through internal temperature sensor)	75, 85	—	°C	Fixed 4.5 s	CHG and DSG OFF	Fixed 15°C hysteresis
OT (PTC)	Internal pull-up resistor for OT with PTC (through external PTC on CTR pin)	1.5, 5, 8	—	MΩ	—	CHG and DSG OFF	Voltage on CTR pin drops below CTR V_{IL} level

Copyright © 2026 Texas Instruments Incorporated

7.2 Functional Block Diagram

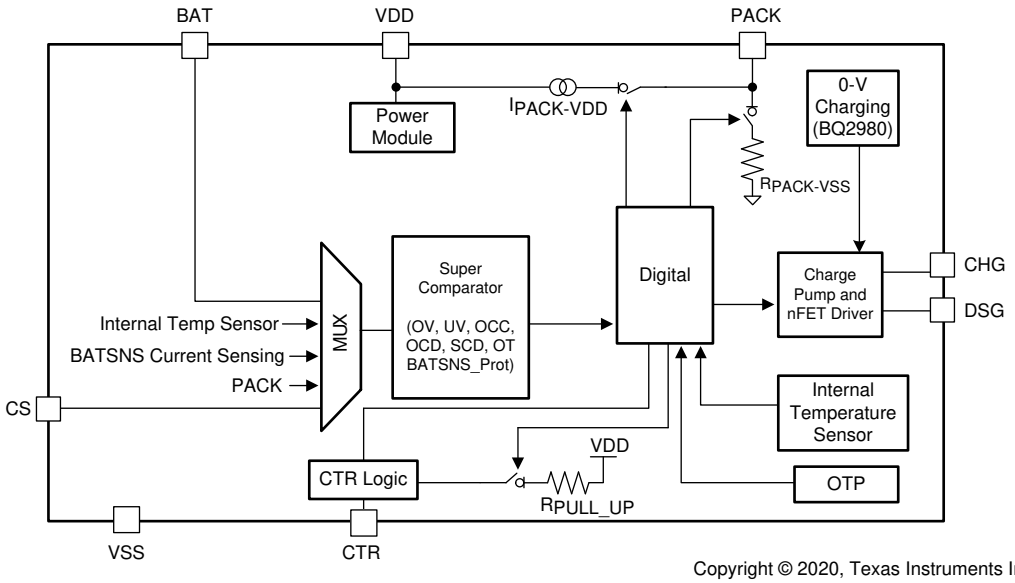

Copyright © 2020, Texas Instruments Incorporated

7.3 Feature Description

7.3.1 Overvoltage (OV) Status

The device detects an OV fault when V_{BAT} > V_{OVP} (OV threshold) during charging. If this condition exists for longer than the OV delay (t_{OVP}), the CHG output is driven to V_{FETOFF} to turn off the CHG FET.

The OV status is released and the CHG output rises to HIGH, that is, V_{CHG} = VDD × (1 + A_{FETON}), if one of the following conditions occurs:

- When V_{BAT} is < (V_{OVP} – V_{OVP_HYS}) and the charger is removed or
- When V_{BAT} is < V_{OVP} and a discharge load is detected.

The device detects the charger is removed if (V_{PACK} – V_{BAT}) < 100mv typical. To detect if a load is attached, the device checks if (V_{BAT} – V_{PACK}) > 400mv typical.

7.3.2 Undervoltage (UV) Status

The device detects a UV fault when the battery voltage measured is below the UV threshold (V_{UVP}). If this condition exists for longer than the UV delay (t_{UVP}), the DSG output is driven to V_{FETOFF} to turn off the DSG FET.

The device includes a UV_SHUT option which may be enabled during factory configuration. If this option is enabled, during the UV fault state the device goes into SHUTDOWN mode to preserve the battery. In SHUTDOWN mode, the BQ2980 will drive the CHG output to the PACK voltage, putting the device into ZVCHG mode (the BQ2982 does not enable this ZVCHG mode). That means, the CHG FET can be turned on if a charger is connected and both VDD and PACK meet the ZVCHG turn-on conditions (see *Section 7.3.9* for more details). The PACK pin is internally pulled to VSS through $R_{PACK-VSS}$. This is to determine if the charger is disconnected on the PACK+ terminal before shutting down the device. It is also to ensure the device does not falsely wake up from SHUTDOWN mode due to noise.

The UV status is released and the DSG output rises to HIGH, that is, V_{DSG} = VDD × (1 + A_{FETON}), if one of the following conditions occurs:

- When V_{BAT} is > (V_{UVP} + V_{UVP_HYS}) and the discharge load is removed or
- When V_{BAT} is > V_{UVP} and a charger is connected.

The device detects that the charger is attached if (V_{PACK} – V_{BAT}) > 700mV typical. To detect for load removal, the device checks if (V_{BAT} – V_{PACK}) < 400mV typical.

If the UV_SHUT option is disabled, during a UV fault DSG is turned off and the device does not go into SHUTDOWN. The power consumption is reduced to I_{FETOFF}. The PACK pin is still internally pulled to VSS through $R_{PACK-VSS}$. To recover UV with this option, one of the following conditions must occur:

- When V_{BAT} is > (V_{UVP} + V_{UVP_HYS}) or
- When V_{BAT} is > V_{UVP} and a charger is connected.

7.3.3 Overcurrent in Charge (OCC) Status

The BQ298xx device detects a current fault by monitoring the voltage drop across an external sense resistor (R_{SNS}) between the CS and VSS pins. The device detects an OCC fault when (V_{CS} – VSS) < OCC threshold (–V_{OC}). If this condition exists for longer than the OCC delay (t_{OC}), the CHG output is driven to V_{FETOFF} to turn off the CHG FET.

The OCC status is released and the CHG output rises to HIGH, that is V_{CHG} = VDD × (1 + A_{FETON}), if (V_{BAT} – V_{PACK}) > 100mV, indicating a charger is removed.

7.3.4 Overcurrent in Discharge (OCD) and Short Circuit in Discharge (SCD) Status

The BQ298xx device detects a current fault by monitoring the voltage drop across an external sense resistor (R_{SNS}) between the CS and VSS pins. The device applies the same method to detect OCD and SCD faults and applies the same recovery scheme to release the OCD and SCD faults.

The device detects an OCD fault when (V_{CS} – VSS) > OCD threshold (+V_{OC}). If this condition exists for longer than the OCD delay (t_{OC}), the DSG output is driven to V_{FETOFF} to turn off the DSG FET. The SCD detection is similar to OCD, but uses the SCD threshold (V_{SCD}) and SCD delay (t_{SCD}) time.

During an OCD or SCD state, the device turns on the recovery detection circuit. An internal current sink ($I_{PACK\ –\ VDD}$) is connected between the PACK and VDD pins, and the device consumes I_{OC_REC} during the OCD and SCD fault until recovery is detected.

The OCD or SCD status is released and the DSG output rises to HIGH, that is V_{DSG} = VDD × (1 + A_{FETON}), if (V_{BAT} – V_{PACK}) < 400mV, indicating a discharge load is removed.

7.3.5 Overtemperature (OT) Status

The device has a built-in internal temperature sensor for OT protection. The sensor detects OT when the internal temperature measurement is above the internal overtemperature threshold (T_{OT}). If this condition exists for longer than the OT delay (t_{OT}), both CHG and DSG outputs are driven to V_{FETOFF} to turn off the CHG and DSG FETs.

The OT state is released and the CHG and DSG outputs rise to HIGH, that is V_{CHG} and V_{DSG} = VDD × (1 + A_{FETON}), if the internal temperature measurement falls below (T_{OT} – T_{OT_HYS}).

7.3.6 Charge and Discharge Driver

The device has a built-in charge pump to support high-side protection using an NFET. When the drivers are on, the CHG and DSG pins are driven to the VDD × (1 + A_{FETON}) voltage level. This means the Vgs across the CHG or DSG FET is about (VDD × A_{FETON}). When the drivers are turned off and VDD ≥ V_{0INH}, the CHG and/or DSG output is driven to V_{FETOFF}.

The charge pump requires VDD > V_{DRIVER_SHUT} to operate. When VDD falls below V_{DRIVER_SHUT}-$V_{DRIVER_SHUT_HYS}$, the DSG output is off. The CHG output can be turned on in BQ2980 if the ZVCHG charging condition is met. See *Section 7.3.9* for more details.

7.3.7 CTR for FET Override and Device Shutdown

The CTR pin is an active-high input pin, which can be controlled by the host system to turn off both CHG and DSG outputs momentarily to reset the system, shut down the system for low-power storage, or as a necessary shutdown if the host detects a critical system error.

The CTR pin uses a 4.5s timer (same specification tolerance as the t_{OVP} delay 4.5s option) to differentiate a reset and shutdown signal. CHG and DSG are off when V_{CTR} > CTR V_{IH} for > 200µs. Counting from the start of

Copyright © 2026 Texas Instruments Incorporated

V_{CTR} > V_{IH}, if V_{CTR} drops below V_{IL} within 3.6s, CHG and DSG simply turn back on. If CTR remains HIGH for > 5.4s, the device enters SHUTDOWN mode.

With this timing control, the system designer can use an RC circuit to implement either a host-controlled power-on-reset or a system shutdown.

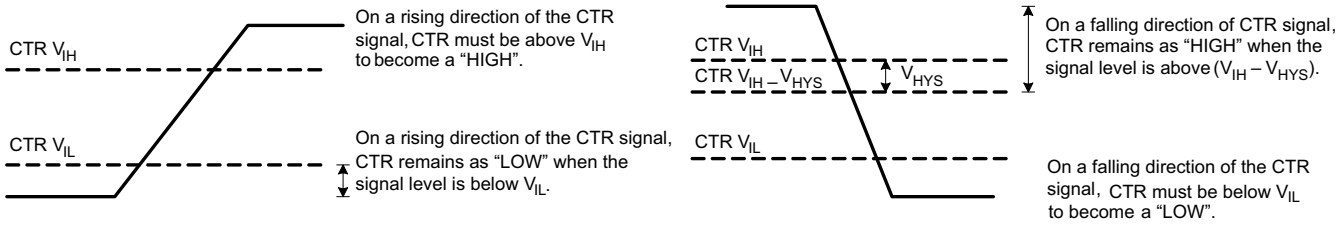

Figure 7-1. CTR Level in Rising and Falling Direction

Note

- CTR shuts down the device only when V_{CTR} is HIGH for > 5.4s AND when there is no OV or OT fault present.
- The CTR V_{IH} level is the voltage level at which the CTR pin is considered HIGH in the positive direction as voltage increases. There is a minimum hysteresis designed into the logic level; therefore, as voltage decreases, CTR is considered HIGH at the (V_{IH} – V_{HYS}) level.
- The FET override and the shutdown functions are not available if the CTR pull-up is enabled. See *Section 7.3.8* for details.

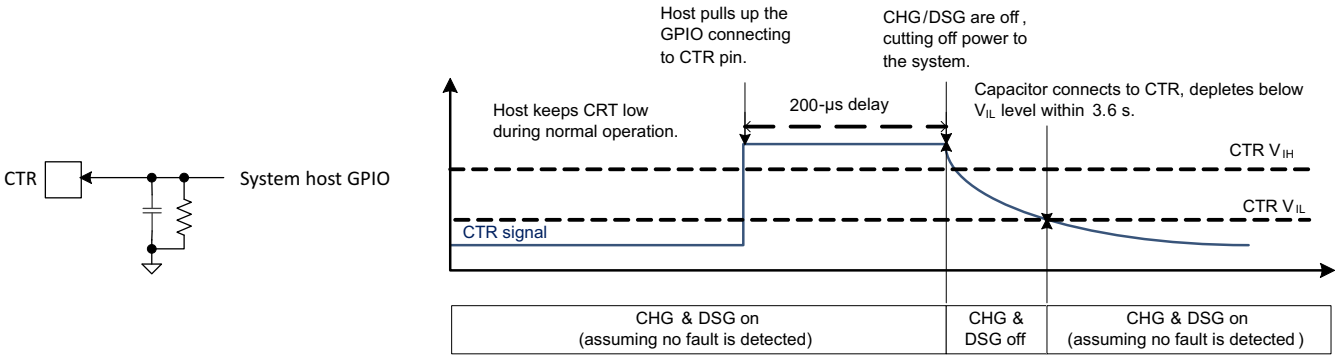

Figure 7-2. System Reset Function Implementation

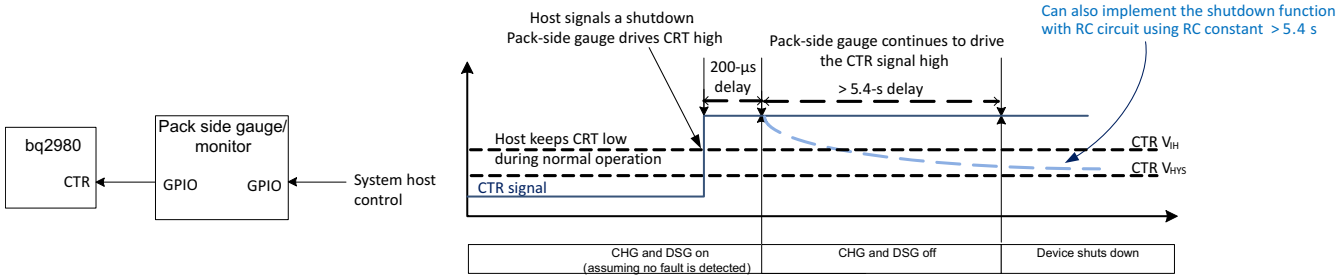

Figure 7-3. Potential System- Controlled Shutdown Implementation

7.3.8 CTR for PTC Connection

If any of the CTR pull-up resistors are selected, the device assumes a PTC is connected to the CTR pin. There are three internal pull-up options: 1.5MΩ, 5MΩ, or 8MΩ. The internal pull-up allows a PTC to be connected between the CTR pin and VSS. This turns the CTR pin to detect an overtemperature fault through an external PTC, as shown in Figure 7-4.

Copyright © 2026 Texas Instruments Incorporated

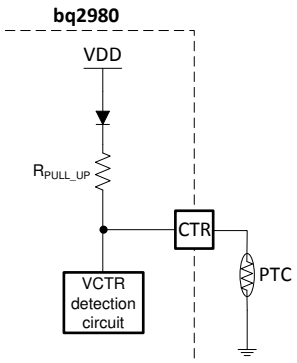

Copyright © 2017, Texas Instruments Incorporated

Figure 7-4. Connecting PTC to CTR Pin for Overtemperature Protection

When any of the CTR internal pull-up resistors are selected (factory configured), an active-high signal (V_{CTR} > CTR V_{IH}) on CTR turns off both CHG and DSG outputs, but it does not shut down the device.

As temperature goes up, the PTC resistance increases and when the voltage divided by the internal R_{PULL_UP} and the R_{PTC} is > CTR V_{IH}, the CHG and DSG outputs are turned off. As temperature falls and the PTC resistance decreases, the CHG and DSG outputs turn back on when (V_{CTR} < CTR V_{IL}).

7.3.9 ZVCHG (0V Charging)

ZVCHG (0-V charging) is a special function that allows charging a severely depleted battery that is below the FET driver charge pump shutdown voltage (V_{DRIVER_SHUT}). The BQ2980 has ZVCHG enabled, while the BQ2982 device has it disabled.

In BQ2980, if V_{BAT} > V_{0INH} and VDD < V_{DRIVER_SHUT}-$V_{DRIVER_SHUT_HYS}$ and the charger voltage at PACK+ is > V_{0CHGR}, then the CHG output will be driven to the voltage of the PACK pin, allowing charging. ZVCHG mode in the BQ2980 is exited when V_{BAT} > V_{DRIVER_SHUT}, at which point the charge pump is enabled, and CHG transitions to being driven by the charge pump. In the BQ2982, ZVCHG is entirely disabled, so charging is disabled whenever VDD < V_{DRIVER_SHUT}–$V_{DRIVER_SHUT_HYS}$.

For BQ2980 and BQ2982, when the voltage on VDD is below V_{0INH}, the CHG output becomes high impedance, and any leakage current flowing through the CHG FET may cause this voltage to rise and reenable charging. If this is undesired, a high impedance resistor can be included between the CHG FET gate and source to overcome any leakage and ensure the FET remains disabled in this case. This resistance should be as high as possible while still ensuring the FET is disabled, since it will increase the device operating current when the CHG driver is enabled. Because gate leakage is typically extremely low, a gate-source resistance of 50 MΩ to 100 MΩ may be sufficient to overcome the leakage.

7.4 Device Functional Modes

7.4.1 Power Modes

7.4.1.1 Power-On-Reset (POR)

The device powers up in SHUTDOWN mode, assuming a UV fault. To enter NORMAL mode, both V_{BAT} and V_{PACK} must meet the UV recovery requirement. In summary, if UV_SHUT is enabled, (V_{BAT} > V_{UVP}) and V_{PACK} detecting a charger connection are required to enter NORMAL mode. If UV_SHUT is disabled, (V_{BAT} > V_{UVP}) and (V_{PACK} > the minimum value of VDD) are required to enter NORMAL mode. See *Section 7.4.1.4* for more details.

During the ZVCHG operation mode (only available in BQ2980), the CHG pin is internally connected to PACK when the device is in SHUTDOWN mode. If both V_{BAT} and V_{PACK} meet the ZVCHG condition (see *Section 7.3.9* for details), CHG is on, even if UV recovery conditions are not met.

Copyright © 2026 Texas Instruments Incorporated

7.4.1.2 NORMAL Mode

In NORMAL mode, all configured protections are active. No fault is detected, and both CHG and DSG drivers are enabled. For the BQ298xx device, if none of the internal CTR pull-up resistor options is selected, V_{CTR} must be < CTR V_{IL} for CHG and DSG to be on.

7.4.1.3 FAULT Mode

If a protection fault is detected, the device enters FAULT mode. In this mode, the CHG or DSG driver is pulled to V_{FETOFF} to turn off the CHG or DSG FETs.

7.4.1.4 SHUTDOWN Mode

This mode is the lowest power-consumption state of the device, with both CHG and DSG turned off.

The two conditions to enter SHUTDOWN mode are as follows:

- Undervoltage (UV): If the device is configured with UV_SHUT enabled, when UV protection is triggered, the device enters SHUTDOWN mode. See *Section 7.3.2* for details.
- CTR control: When CTR is HIGH for > 5.4s, the device enters SHUTDOWN mode. See *Section 7.3.7* for details.

Note

If the internal CTR pull-up is enabled, a HIGH at CTR does not activate the shutdown process. This is because when the internal pull-up is enabled, the CTR pin is configured for use with an external PTC for overtemperature protection, and the CTR functionality is disabled.

8 Application and Implementation

Application Information Disclaimer

Note

Information in the following applications sections is not part of the TI component specification, and TI does not warrant its accuracy or completeness. TI's customers are responsible for determining suitability of components for their purposes, as well as validating and testing their design implementation to confirm system functionality.

8.1 Application Information

8.1.1 Test Circuits for Device Evaluation

1. *Test Power Consumption (Test Circuit 1)*

   This setup is suitable to test for device power consumption at different power modes. VS1 is a voltage source that simulates a battery cell. VS2 is used to simulate a charger and load under different power mode conditions.

   I1 is a current meter that monitors the device power consumption at different modes. I2 is a current meter that monitors the PACK pin current. The I_{PACK} current is insignificant in most operation modes. If a charger is connected (VS2 has a positive voltage), but the device is still in SHUTDOWN mode, I2 reflects the I_{PACK} current drawing from the charger due to the internal $R_{PACK-VSS}$ resistor.
2. *Test CHG and DSG Voltage and Status (Test Circuit 2)*

   This setup is suitable to test V_{CHG} and V_{DSG} levels or monitor the CHG and DSG status at different operation modes. It is not suitable to measure power consumption of the device, because the meters (or scope probes) connected to CHG and/or DSG increase the charge pump loading beyond the normal application condition. Therefore, the current consumption of the device under this setup is greatly increased.
3. *Test for Fault Protection (Test Circuit 3)*

Copyright © 2026 Texas Instruments Incorporated

This setup is suitable to test OV, UV, OCD, OCD, and SCD protections.

Voltage protection:

Adjust VS1 to simulation OV and UV. TI recommends having 0V on VS3 during the voltage test to avoid generating multiple faults. Adjust VS2 to simulate the charger/load connection or disconnection. Combine with test circuit 1 to monitor power consumption, or combine with test circuit 2 to monitor CHG and DSG status.

Test example for OV fault and OV recovery by charger removal:

a. Adjust both VS1 and VS2 > OVP threshold.
b. As the device triggers for OVP and CHG is open, VS2 can be set to a maximum expected charger voltage as if in an actual application when CHG is open, and charger voltage may regulate to the maximum setting.
c. To test for OV recovery, adjust VS1 below (V_{OVP} – V_{OVP_Hys}). Reduce the VS2 voltage so that (VS2 – VS1) < 100 mV (to emulate removal of a charger).

Current protection:

Similar to the voltage protection test, adjust VS3 to simulate OCC, OCD, and SCD thresholds. Use VS2 to simulate a charger/load status. TI recommends setting VS1 to the normal level to avoid triggering multiple faults.

Note

It is normal to observe CHG or DSG flipping on and off if VS2 is not set up properly to simulate a charger or load connection/disconnection, especially when the voltage source is used to simulate fault conditions. It is because an improper VS2 setting may mislead the device to sense a recovery condition immediately after a fault protection is triggered.

4. *Test for CTR Control (Test Circuit 4)*

This setup is suitable to test for CTR control. Adjust VS4 above or below the CTR V_{IH} or V_{IL} level. Combine with test circuit 1 to observe the power consumption, or combine with test circuit 2 to observe the CHG and DSG status.

8.1.2 Test Circuit Diagrams

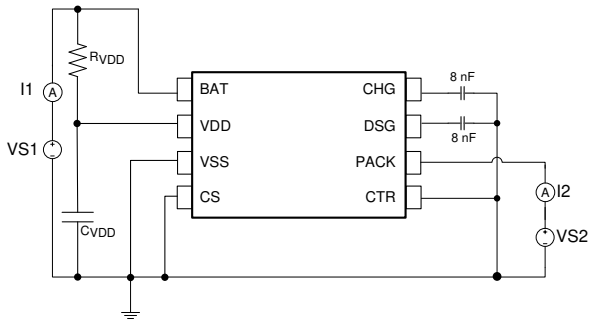

Copyright © 2017, Texas Instruments Incorporated

Figure 8-1. Test Circuit 1

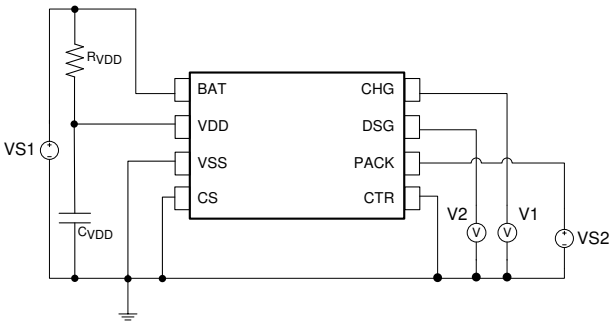

Copyright © 2017, Texas Instruments Incorporated

Figure 8-2. Test Circuit 2

Copyright © 2026 Texas Instruments Incorporated

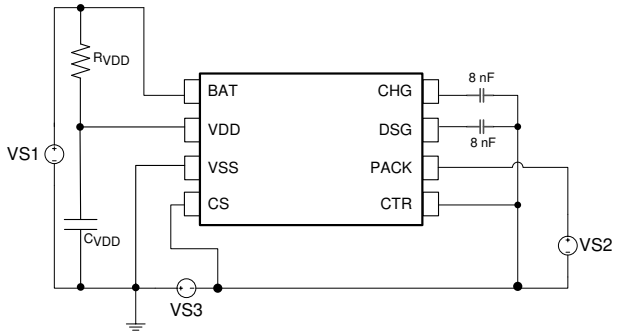

Copyright © 2017, Texas Instruments Incorporated

Figure 8-3. Test Circuit 3

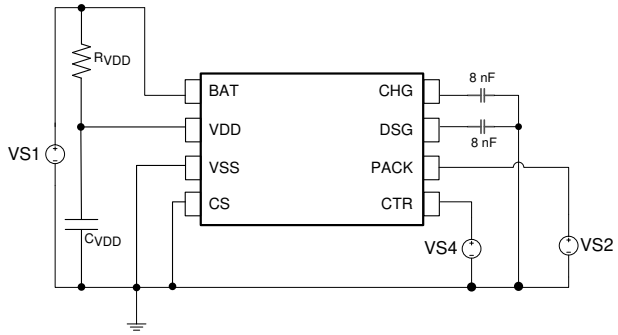

Copyright © 2017, Texas Instruments Incorporated

Figure 8-4. Test Circuit 4

8.1.3 Using CTR as FET Driver On/Off Control

Normally, CTR is not designed as a purely on/off control of the FET drivers, because there is a timing constriction on the pin. The following is a list of workarounds to implement the CTR as an on/off switch to the FET drivers.

1. *Switching CTR from high to low with less than 3.6s:*

   If the application only requires turning off the FET drivers in < 3.6s, then the CTR pin can simply be viewed as an on/off switch of the FET drivers. That means, after the CTR pin is pulled high, the application will pull the CTR pin back low in < 3.6s.
2. *Applying a voltage on PACK to prevent the device from entering SHUTDOWN mode:*

   When the CTR pin is be pulled high for > 3.6s, there is a chance the device may go into SHUTDOWN mode. If the CTR pin is high for > 5.4s, the device will be in SHUTDOWN mode. For applications that may use the CTR to keep the FET drivers off for > 3.6s, the workaround is to keep V_{PACK} within the VDD recommended operating range while the CTR is pulled high to prevent the device from entering SHUTDOWN mode. The device is forced to stay in NORMAL mode with this method.

   Because the PACK pin is also connected to the PACK terminal, the system designer should have a blocking diode to protect the GPIO (that controls the CTR pin) from high voltage.

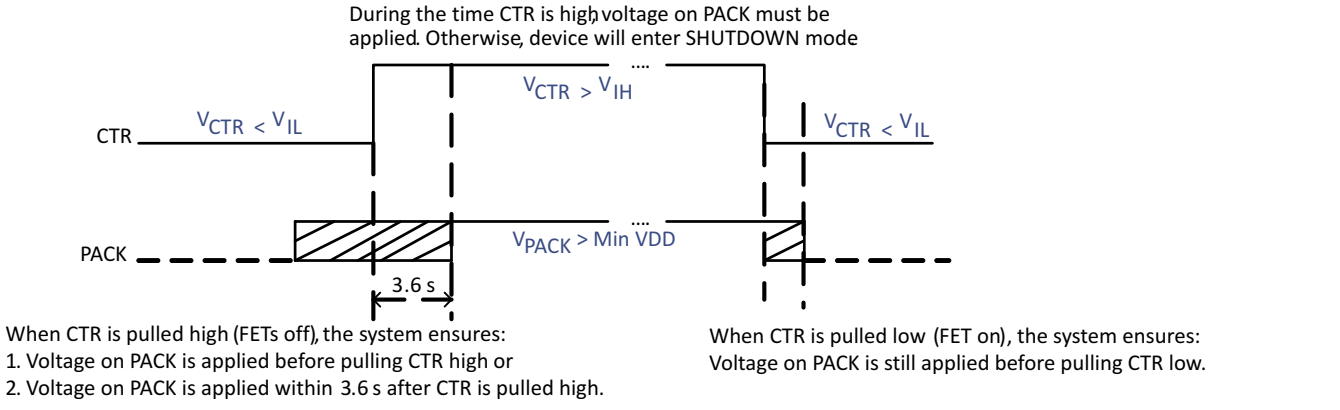

Copyright ©2017, Texas Instruments Incorporated

Figure 8-5. PACK Voltage Timing with Switching CTR as On/Off Control of FET Drivers

8.2 Typical Applications

8.2.1 BQ298xx Configuration 1: System-Controlled Reset/Shutdown Function

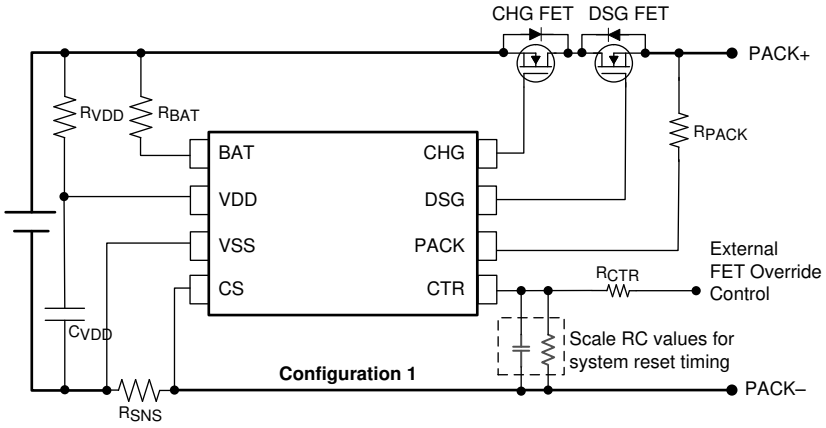

Figure 8-6. BQ298xx Reference Schematic Configuration 1

8.2.1.1 Design Requirements

For this design example, use the parameters listed Table 8-1.

Table 8-1. Recommended Component Selection

PARAMETER		TYP	MAX	UNIT	COMMENT
R_{PACK}	PACK resistor	—	2	kΩ	This resistor is used to protect the PACK pin from a reserve charging current condition.
R_{VDD}	VDD filter resistor	—	300	Ω	
C_{VDD}	VDD filter capacitor	0.1	1	µF	
R_{BAT}	BAT resistor (for safety. To limit current if BAT pin is shorted internally)	20	—	Ω	This resistor limits current if the BAT pin is shorted to ground internally. BAT is used for voltage measurement for OV and UV. A larger resistor value can impact the voltage measurement accuracy.
R_{CTR}	CTR resistor (optional for ESD)	100	—	Ω	This is optional for ESD protection and is highly dependent on the PCB layout.

8.2.1.2 Detailed Design Procedure

- Determine if a CTR for FET override or an improved voltage measurement function is required in the battery pack design.
- See Figure 8-6 for the schematic design.
- Check the cell specification and system requirement to determine OV and UV levels.
- Define the sense resistor value and system requirement to determine OCC, OCD, and SCD levels. For example, with a 1mΩ sense resistor and OCC, OCD, and SCD, the requirement is 6A, 8A, and 20A, respectively. The OCC threshold should be set to 6mV, the OCD threshold should be at 8mV, and the SCD threshold should be at 20mV.
- Determine the required OT protection threshold. The OT fault turns off the CHG and the DSG, so the threshold must account for the highest allowable charge and discharge temperature range.
- When a decision is made on the various thresholds, search for whether a device configuration is available or contact the local sales office for more information.

8.2.1.3 Selection of Power FET

The high-side driver of the BQ298xx device limits the Vgs below 8V with a 4.4V battery cell. This means the device can work with a power FET with an absolute maximum rating as low as ±8V Vgs, which is common in smartphone applications.

Copyright © 2026 Texas Instruments Incorporated

Additionally, TI highly recommends using a low gate leakage FET around 6V to 7V Vgs range. The power FET on the BQ298xx evaluation module has the following typical gate leakage. TI recommends selecting a similar gate leakage FET for the design.

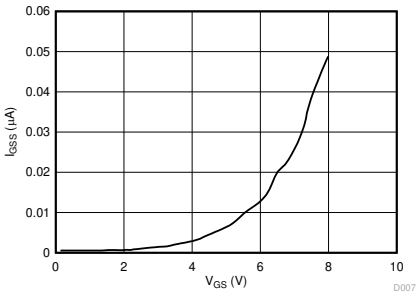

Figure 8-7. Power FET (on BQ2980 EVM) Gate Leakage Versus Vgs

8.2.1.4 Application Curves

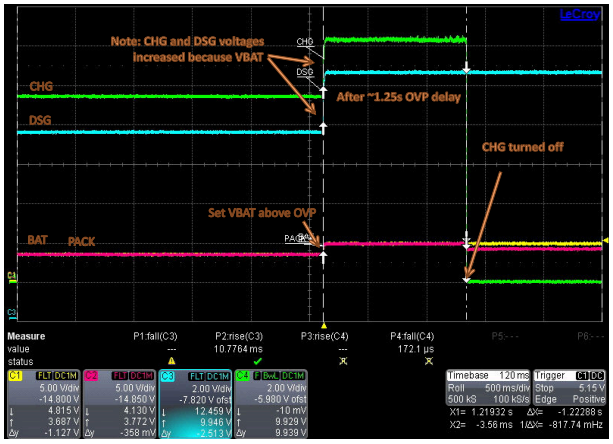

Figure 8-8. Overvoltage (OV) Protection

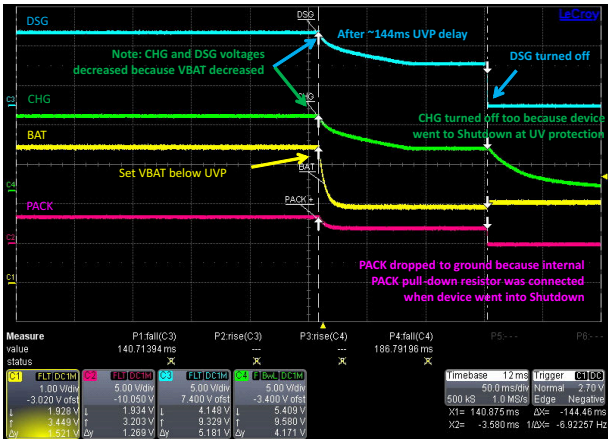

Figure 8-9. Undervoltage (UV) Protection

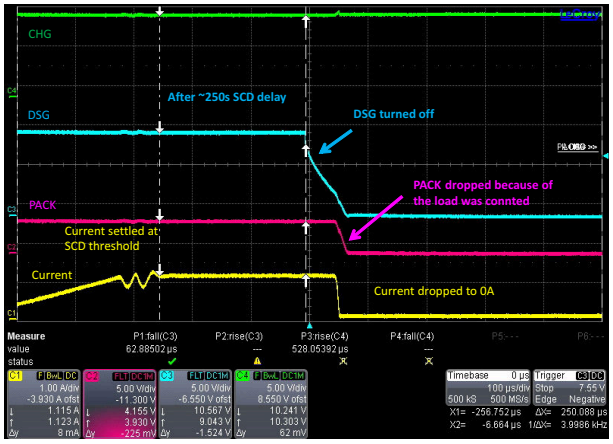

Figure 8-10. Short Circuit (SCD) Protection

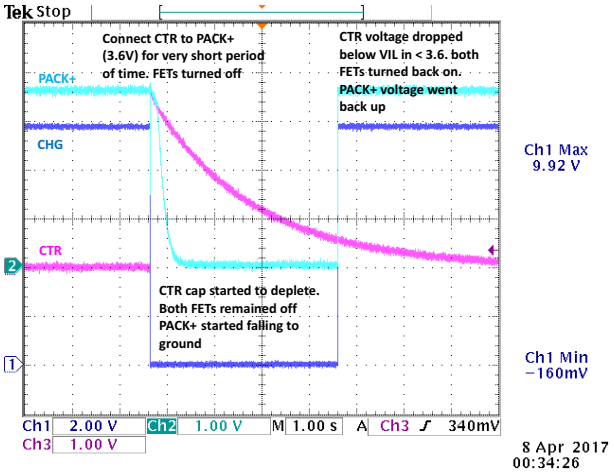

The RC values used in this example are for reference only. System designers should depend on their pull-up voltage and RC tolerance to add any additional margin. TI also recommends users keep the delay time below 3.6s, if possible, for the reset function.

Figure 8-11. Setup CTR for System Reset (Using 5MΩ and 1µF RC)

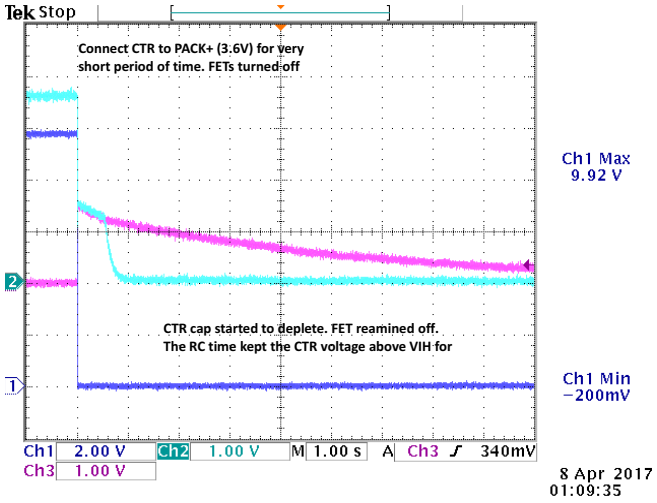

The RC values used in this example are for reference only. System designers should depend on their pull-up voltage and RC tolerance to add any additional margin. TI also recommends users keep the delay time below 5.4s, if possible, for the shutdown function.

Figure 8-12. Setup CTR for System Shutdown (Using 5MΩ and 1µF RC)

Copyright © 2026 Texas Instruments Incorporated

8.2.2 BQ298xx Configuration 2: CTR Function Disabled

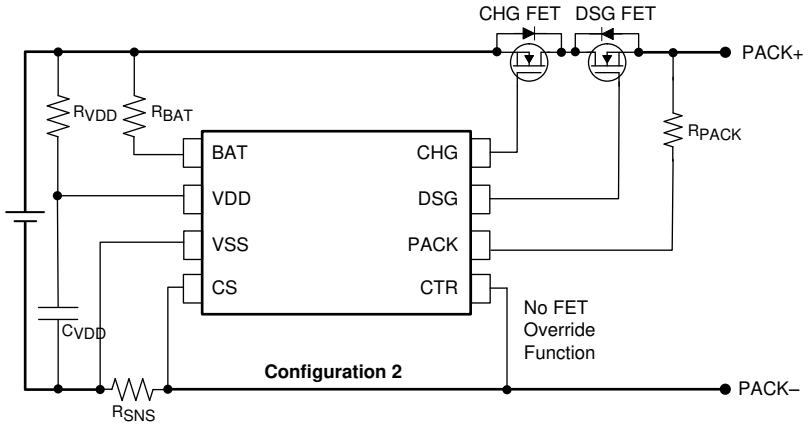

Figure 8-13. BQ298xx Reference Schematic Configuration 2

8.2.3 BQ298xx Configuration 3: PTC Thermistor Protection

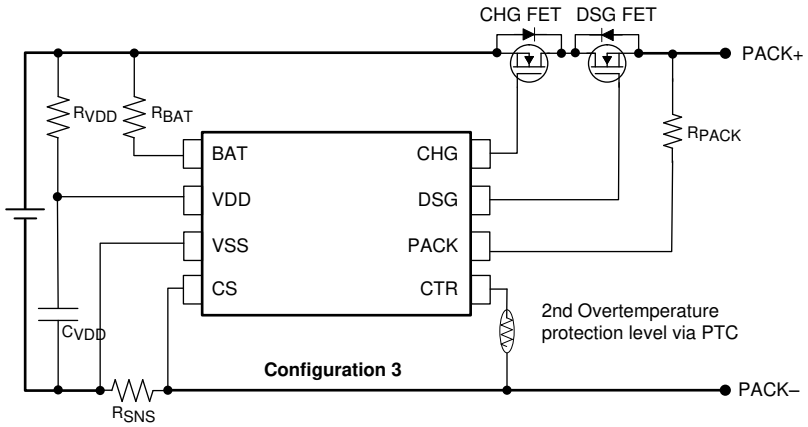

Figure 8-14. BQ298xx Reference Schematic Configuration 3

9 Power Supply Recommendations

The device supports single-cell li-ion and li-polymer batteries of various chemistries with a maximum VDD below 5.5V.

Copyright © 2026 Texas Instruments Incorporated

10 Layout

10.1 Layout Guidelines

1. Place the components to optimize the layout. For example, group the high-power components like cell pads, PACK+ and PACK– pads, power FETs, and R_{SNS} together, allowing the layout to optimize the power traces for the best thermal heat spreading.
2. Separate the device's VSS and low-power components to a low-current ground plane. Both grounds can meet at R_{SNS}.
3. Place the VDD RC filter close to the device's VDD pin.

10.2 Layout Example

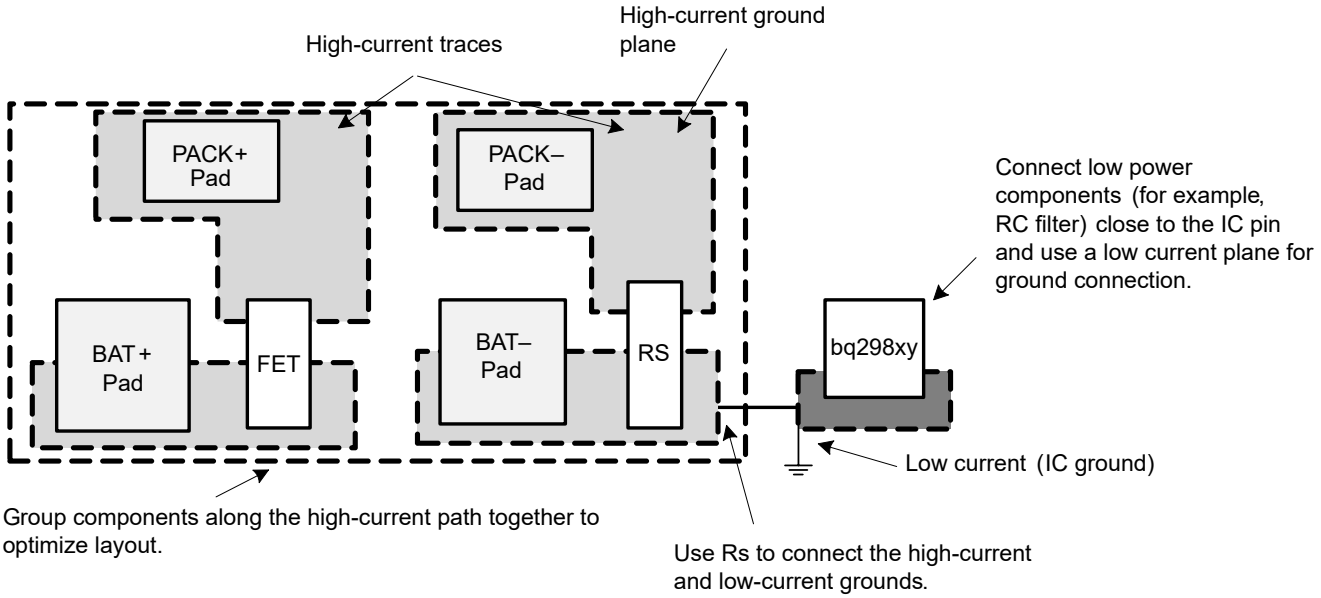

Figure 10-1. Component Placement and Grounding Pattern Example

Copyright © 2026 Texas Instruments Incorporated

11 Device and Documentation Support

11.1 Third-Party Products Disclaimer

TI'S PUBLICATION OF INFORMATION REGARDING THIRD-PARTY PRODUCTS OR SERVICES DOES NOT CONSTITUTE AN ENDORSEMENT REGARDING THE SUITABILITY OF SUCH PRODUCTS OR SERVICES OR A WARRANTY, REPRESENTATION OR ENDORSEMENT OF SUCH PRODUCTS OR SERVICES, EITHER ALONE OR IN COMBINATION WITH ANY TI PRODUCT OR SERVICE.

11.2 Receiving Notification of Documentation Updates

To receive notification of documentation updates, navigate to the device product folder on ti.com. Click on *Notifications* to register and receive a weekly digest of any product information that has changed. For change details, review the revision history included in any revised document.

11.3 Support Resources

TI E2E™ support forums are an engineer's go-to source for fast, verified answers and design help — straight from the experts. Search existing answers or ask your own question to get the quick design help you need.

Linked content is provided "AS IS" by the respective contributors. They do not constitute TI specifications and do not necessarily reflect TI's views; see TI's Terms of Use.

11.4 Trademarks

TI E2E™ is a trademark of Texas Instruments.
All trademarks are the property of their respective owners.

11.5 Electrostatic Discharge Caution



This integrated circuit can be damaged by ESD. Texas Instruments recommends that all integrated circuits be handled with appropriate precautions. Failure to observe proper handling and installation procedures can cause damage.

ESD damage can range from subtle performance degradation to complete device failure. Precision integrated circuits may be more susceptible to damage because very small parametric changes could cause the device not to meet its published specifications.

11.6 Glossary

TI Glossary	This glossary lists and explains terms, acronyms, and definitions.

12 Revision History

NOTE: Page numbers for previous revisions may differ from page numbers in the current version.

Changes from Revision L (March 2025) to Revision M (November 2026)	Page
• Added the BQ298014 device to the *Device Comparison Table*	3

Changes from Revision K (July 2024) to Revision L (March 2025)	Page
• Added the BQ298023 device to the *Device Comparison Table*	3

Changes from Revision J (December 2022) to Revision K (July 2024)	Page
• Added the BQ298218 device to the *Device Comparison Table*	3

Copyright © 2026 Texas Instruments Incorporated

Changes from Revision I (November 2021) to Revision J (December 2022) **Page**

- Added the BQ298217 device to the *Device Comparison Table* 3

Changes from Revision H (July 2021) to Revision I (November 2021) **Page**

- Changed the *Device Comparison Table* 3

Changes from Revision G (May 2021) to Revision H (July 2021) **Page**

- Changed the BQ298019 device from PRODUCT PREVIEW to Production Data in the *Device Comparison Table* 3

Changes from Revision F (December 2020) to Revision G (May 2021) **Page**

- Removed "Product Preview" footnote from BQ2982 in *Description* 1
- Changed the *Device Comparison Table* 3
- Removed PRODUCT PREVIEW footnote from BQ2982xy in *Thermal Information* 6
- Clarified CHG driver at low VDD in *Electrical Characteristics* 6
- Clarified VDD condition in *Charge and Discharge Driver* 12
- Clarified ZVCHG in *Section 7.3.9* 14

Changes from Revision E (January 2020) to Revision F (December 2020) **Page**

- Added *BQ2982xy* in the title and throughout the document text 1
- Added the note that only BQ2980 supports 0-V charging to *Features* 1
- Added the description of the difference between the BQ2980 and BQ2982 in *Description* 1
- Added the BQ2982 device family to the *Device Information Table* 1
- Added the BQ298018 and BQ298215 devices to the *Device Comparison Table*; changed BQ298006, BQ298009, and BQ298015 devices from custom to catalog devices; added a table footnote for clarity regarding the CTR R_{PULL_UP} 3
- Included BQ2982xy in *Thermal Information* 6
- Added clarification that ZVCHG and associated specifications only apply to BQ2980xy, not to BQ2982xy in *Electrical Characteristics* 6
- Changed specification for V_{UVP_ACC} in *Electrical Characteristics* 6
- Corrected units for V_{UVP_HYS} specification in *Electrical Characteristics* 6
- Clarified description of $V_{DRIVER_SHUT_HYS}$ and added $V_{DRIVER_SHUT_HYS}$ specification in *Electrical Characteristics* 6
- Corrected error in *Device Configuration Range* table 10
- Added clarification on UV_SHUT and ZVCHG options in *Undervoltage (UV) Status* 11
- Added clarification regarding ZVCHG in *Charge and Discharge Driver* 12
- Clarified ZVCHG in *Section 7.3.9* 14
- Added clarification regarding ZVCHG in the BQ2980 device in *Power-On-Reset (POR)* 14

Copyright © 2026 Texas Instruments Incorporated

Changes from Revision D (August 2019) to Revision E (January 2020) **Page**

- Deleted Undertemperature (UT) 1
- Changed the *Device Comparison Table* 3
- Changed BQ298010 and BQ298012 devices from custom to catalog devices 3

Changes from Revision C (May 2018) to Revision D (August 2019) **Page**

- Replaced the battery icon with the battery schematic symbol in the *Simplified Schematic* 1
- Added the battery schematic symbol in BQ298xx Reference Schematic Configuration 1 18
- Added the battery schematic symbol in Figure 8-13 21
- Added the battery schematic symbol in Figure 8-14 21

Changes from Revision B (February 2018) to Revision C (May 2018) **Page**

- Added 0-V charging to *Features* 1
- Changed the *Device Comparison Table* 3
- Changed *Undervoltage (UV) Status* 11

Changes from Revision A (January 2018) to Revision B (February 2018) **Page**

- Changed the *Device Comparison Table* 3

Changes from Revision * (October 2017) to Revision A (January 2018) **Page**

- Changed the *Device Comparison Table* 3
- Changed I_{NORMAL} test conditions in *Electrical Characteristics* 6
- Changed V_{OC} test conditions in *Electrical Characteristics* 6
- Changed I_{OCD_REC} in *Electrical Characteristics* 6

13 Mechanical, Packaging, and Orderable Information

The following pages include mechanical, packaging, and orderable information. This information is the most current data available for the designated devices. This data is subject to change without notice and revision of this document. For browser-based versions of this data sheet, refer to the left-hand navigation.

Copyright © 2026 Texas Instruments Incorporated

PACKAGING INFORMATION

Orderable part number	Status (1)	Material type (2)	Package | Pins	Package qty | Carrier	RoHS (3)	Lead finish/ Ball material (4)	MSL rating/ Peak reflow (5)	Op temp (°C)	Part marking (6)
BQ298000RUGR	Active	Production	X2QFN (RUG) | 8	3000 | LARGE T&R	Yes	NIPDAU	Level-1-260C-UNLIM	-40 to 85	5I
BQ298000RUGR.A	Active	Production	X2QFN (RUG) | 8	3000 | LARGE T&R	Yes	NIPDAU	Level-1-260C-UNLIM	-40 to 85	5I
BQ298000RUGT	Active	Production	X2QFN (RUG) | 8	250 | SMALL T&R	Yes	NIPDAU	Level-1-260C-UNLIM	-40 to 85	5I
BQ298000RUGT.A	Active	Production	X2QFN (RUG) | 8	250 | SMALL T&R	Yes	NIPDAU	Level-1-260C-UNLIM	-40 to 85	5I
BQ298006RUGR	Active	Production	X2QFN (RUG) | 8	3000 | LARGE T&R	Yes	NIPDAU	Level-1-260C-UNLIM	-40 to 85	5I 06
BQ298006RUGR.A	Active	Production	X2QFN (RUG) | 8	3000 | LARGE T&R	Yes	NIPDAU	Level-1-260C-UNLIM	-40 to 85	5I 06
BQ298006RUGT	Active	Production	X2QFN (RUG) | 8	250 | SMALL T&R	Yes	NIPDAU	Level-1-260C-UNLIM	-40 to 85	5I 06
BQ298006RUGT.A	Active	Production	X2QFN (RUG) | 8	250 | SMALL T&R	Yes	NIPDAU	Level-1-260C-UNLIM	-40 to 85	5I 06
BQ298009RUGR	Active	Production	X2QFN (RUG) | 8	3000 | LARGE T&R	Yes	NIPDAU	Level-1-260C-UNLIM	-40 to 85	5I 09
BQ298009RUGR.A	Active	Production	X2QFN (RUG) | 8	3000 | LARGE T&R	Yes	NIPDAU	Level-1-260C-UNLIM	-40 to 85	5I 09
BQ298009RUGT	Active	Production	X2QFN (RUG) | 8	250 | SMALL T&R	Yes	NIPDAU	Level-1-260C-UNLIM	-40 to 85	5I 09
BQ298009RUGT.A	Active	Production	X2QFN (RUG) | 8	250 | SMALL T&R	Yes	NIPDAU	Level-1-260C-UNLIM	-40 to 85	5I 09
BQ298010RUGR	Active	Production	X2QFN (RUG) | 8	3000 | LARGE T&R	Yes	NIPDAU	Level-1-260C-UNLIM	-40 to 85	5I 10
BQ298010RUGR.A	Active	Production	X2QFN (RUG) | 8	3000 | LARGE T&R	Yes	NIPDAU	Level-1-260C-UNLIM	-40 to 85	5I 10
BQ298010RUGT	Active	Production	X2QFN (RUG) | 8	250 | SMALL T&R	Yes	NIPDAU	Level-1-260C-UNLIM	-40 to 85	5I 10
BQ298010RUGT.A	Active	Production	X2QFN (RUG) | 8	250 | SMALL T&R	Yes	NIPDAU	Level-1-260C-UNLIM	-40 to 85	5I 10
BQ298012RUGR	Active	Production	X2QFN (RUG) | 8	3000 | LARGE T&R	Yes	NIPDAU	Level-1-260C-UNLIM	-40 to 85	5I 12
BQ298012RUGR.A	Active	Production	X2QFN (RUG) | 8	3000 | LARGE T&R	Yes	NIPDAU	Level-1-260C-UNLIM	-40 to 85	5I 12

Orderable part number	Status (1)	Material type (2)	Package | Pins	Package qty | Carrier	RoHS (3)	Lead finish/ Ball material (4)	MSL rating/ Peak reflow (5)	Op temp (°C)	Part marking (6)
BQ298012RUGT	Active	Production	X2QFN (RUG) | 8	250 | SMALL T&R	Yes	NIPDAU	Level-1-260C-UNLIM	-40 to 85	5I 12
BQ298012RUGT.A	Active	Production	X2QFN (RUG) | 8	250 | SMALL T&R	Yes	NIPDAU	Level-1-260C-UNLIM	-40 to 85	5I 12
BQ298015RUGR	Active	Production	X2QFN (RUG) | 8	3000 | LARGE T&R	Yes	NIPDAU	Level-1-260C-UNLIM	-40 to 85	5I 15
BQ298015RUGR.A	Active	Production	X2QFN (RUG) | 8	3000 | LARGE T&R	Yes	NIPDAU	Level-1-260C-UNLIM	-40 to 85	5I 15
BQ298015RUGT	Active	Production	X2QFN (RUG) | 8	250 | SMALL T&R	Yes	NIPDAU	Level-1-260C-UNLIM	-40 to 85	5I 15
BQ298015RUGT.A	Active	Production	X2QFN (RUG) | 8	250 | SMALL T&R	Yes	NIPDAU	Level-1-260C-UNLIM	-40 to 85	5I 15
BQ298018RUGR	Active	Production	X2QFN (RUG) | 8	3000 | LARGE T&R	Yes	NIPDAU	Level-1-260C-UNLIM	-40 to 85	5I 18
BQ298018RUGR.A	Active	Production	X2QFN (RUG) | 8	3000 | LARGE T&R	Yes	NIPDAU	Level-1-260C-UNLIM	-40 to 85	5I 18
BQ298019RUGR	Active	Production	X2QFN (RUG) | 8	3000 | LARGE T&R	Yes	NIPDAU	Level-1-260C-UNLIM	-40 to 85	5I 19
BQ298019RUGR.A	Active	Production	X2QFN (RUG) | 8	3000 | LARGE T&R	Yes	NIPDAU	Level-1-260C-UNLIM	-40 to 85	5I 19
BQ298023RUGR	Active	Production	X2QFN (RUG) | 8	3000 | LARGE T&R	Yes	NIPDAU	Level-1-260C-UNLIM	-40 to 85	5I 23
BQ298023RUGR.A	Active	Production	X2QFN (RUG) | 8	3000 | LARGE T&R	Yes	NIPDAU	Level-1-260C-UNLIM	-40 to 85	5I 23
BQ298215RUGR	Active	Production	X2QFN (RUG) | 8	3000 | LARGE T&R	Yes	NIPDAU	Level-1-260C-UNLIM	-40 to 85	82 15
BQ298215RUGR.A	Active	Production	X2QFN (RUG) | 8	3000 | LARGE T&R	Yes	NIPDAU	Level-1-260C-UNLIM	-40 to 85	82 15
BQ298216RUGR	Active	Production	X2QFN (RUG) | 8	3000 | LARGE T&R	Yes	NIPDAU	Level-1-260C-UNLIM	-40 to 85	82 16
BQ298216RUGR.A	Active	Production	X2QFN (RUG) | 8	3000 | LARGE T&R	Yes	NIPDAU	Level-1-260C-UNLIM	-40 to 85	82 16
BQ298217RUGR	Active	Production	X2QFN (RUG) | 8	3000 | LARGE T&R	Yes	NIPDAU	Level-1-260C-UNLIM	-40 to 85	82 17

Orderable part number	Status (1)	Material type (2)	Package | Pins	Package qty | Carrier	RoHS (3)	Lead finish/ Ball material (4)	MSL rating/ Peak reflow (5)	Op temp (°C)	Part marking (6)
BQ298217RUGR.A	Active	Production	X2QFN (RUG) | 8	3000 | LARGE T&R	Yes	NIPDAU	Level-1-260C-UNLIM	-40 to 85	82 17
BQ298218RUGR	Active	Production	X2QFN (RUG) | 8	3000 | LARGE T&R	Yes	NIPDAU	Level-1-260C-UNLIM	-40 to 85	82 18
BQ298218RUGR.A	Active	Production	X2QFN (RUG) | 8	3000 | LARGE T&R	Yes	NIPDAU	Level-1-260C-UNLIM	-40 to 85	82 18

(1) **Status:** For more details on status, see our product life cycle.

(2) **Material type:** When designated, preproduction parts are prototypes/experimental devices, and are not yet approved or released for full production. Testing and final process, including without limitation quality assurance, reliability performance testing, and/or process qualification, may not yet be complete, and this item is subject to further changes or possible discontinuation. If available for ordering, purchases will be subject to an additional waiver at checkout, and are intended for early internal evaluation purposes only. These items are sold without warranties of any kind.

(3) **RoHS values:** Yes, No, RoHS Exempt. See the TI RoHS Statement for additional information and value definition.

(4) **Lead finish/Ball material:** Parts may have multiple material finish options. Finish options are separated by a vertical ruled line. Lead finish/Ball material values may wrap to two lines if the finish value exceeds the maximum column width.

(5) **MSL rating/Peak reflow:** The moisture sensitivity level ratings and peak solder (reflow) temperatures. In the event that a part has multiple moisture sensitivity ratings, only the lowest level per JEDEC standards is shown. Refer to the shipping label for the actual reflow temperature that will be used to mount the part to the printed circuit board.

(6) **Part marking:** There may be an additional marking, which relates to the logo, the lot trace code information, or the environmental category of the part.

Multiple part markings will be inside parentheses. Only one part marking contained in parentheses and separated by a "~" will appear on a part. If a line is indented then it is a continuation of the previous line and the two combined represent the entire part marking for that device.

Important Information and Disclaimer: The information provided on this page represents TI's knowledge and belief as of the date that it is provided. TI bases its knowledge and belief on information provided by third parties, and makes no representation or warranty as to the accuracy of such information. Efforts are underway to better integrate information from third parties. TI has taken and continues to take reasonable steps to provide representative and accurate information but may not have conducted destructive testing or chemical analysis on incoming materials and chemicals. TI and TI suppliers consider certain information to be proprietary, and thus CAS numbers and other limited information may not be available for release.

In no event shall TI's liability arising out of such information exceed the total purchase price of the TI part(s) at issue in this document sold by TI to Customer on an annual basis.

TAPE AND REEL INFORMATION

REEL DIMENSIONS

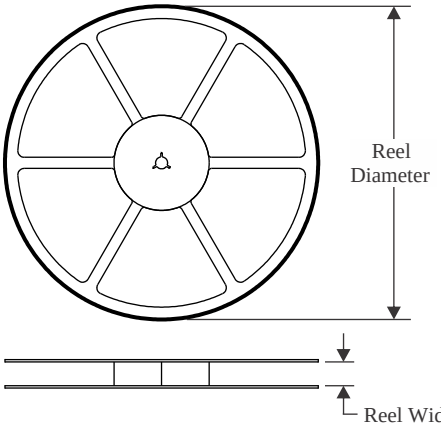

TAPE DIMENSIONS

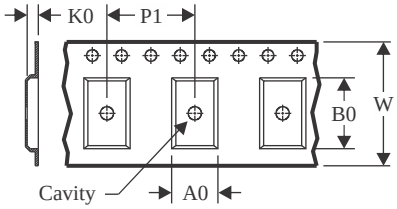

A0	Dimension designed to accommodate the component width
B0	Dimension designed to accommodate the component length
K0	Dimension designed to accommodate the component thickness
W	Overall width of the carrier tape
P1	Pitch between successive cavity centers

QUADRANT ASSIGNMENTS FOR PIN 1 ORIENTATION IN TAPE

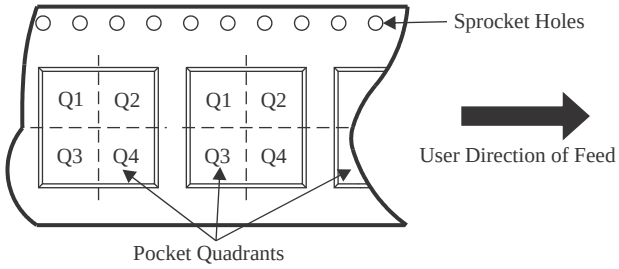

*All dimensions are nominal

Device	Package Type	Package Drawing	Pins	SPQ	Reel Diameter (mm)	Reel Width W1 (mm)	A0 (mm)	B0 (mm)	K0 (mm)	P1 (mm)	W (mm)	Pin1 Quadrant
BQ298000RUGR	X2QFN	RUG	8	3000	180.0	9.5	1.69	1.69	0.63	4.0	8.0	Q2
BQ298000RUGT	X2QFN	RUG	8	250	180.0	9.5	1.69	1.69	0.63	4.0	8.0	Q2
BQ298006RUGR	X2QFN	RUG	8	3000	180.0	9.5	1.69	1.69	0.63	4.0	8.0	Q2
BQ298006RUGT	X2QFN	RUG	8	250	180.0	9.5	1.69	1.69	0.63	4.0	8.0	Q2
BQ298009RUGR	X2QFN	RUG	8	3000	180.0	9.5	1.69	1.69	0.63	4.0	8.0	Q2
BQ298009RUGT	X2QFN	RUG	8	250	180.0	9.5	1.69	1.69	0.63	4.0	8.0	Q2
BQ298010RUGR	X2QFN	RUG	8	3000	180.0	9.5	1.69	1.69	0.63	4.0	8.0	Q2
BQ298010RUGT	X2QFN	RUG	8	250	180.0	9.5	1.69	1.69	0.63	4.0	8.0	Q2
BQ298012RUGR	X2QFN	RUG	8	3000	180.0	9.5	1.69	1.69	0.63	4.0	8.0	Q2
BQ298012RUGT	X2QFN	RUG	8	250	180.0	9.5	1.69	1.69	0.63	4.0	8.0	Q2
BQ298015RUGR	X2QFN	RUG	8	3000	180.0	9.5	1.69	1.69	0.63	4.0	8.0	Q2
BQ298015RUGT	X2QFN	RUG	8	250	180.0	9.5	1.69	1.69	0.63	4.0	8.0	Q2
BQ298018RUGR	X2QFN	RUG	8	3000	180.0	9.5	1.69	1.69	0.63	4.0	8.0	Q2
BQ298019RUGR	X2QFN	RUG	8	3000	180.0	9.5	1.69	1.69	0.63	4.0	8.0	Q2
BQ298023RUGR	X2QFN	RUG	8	3000	180.0	9.5	1.69	1.69	0.63	4.0	8.0	Q2
BQ298215RUGR	X2QFN	RUG	8	3000	180.0	9.5	1.69	1.69	0.63	4.0	8.0	Q2

Device	Package Type	Package Drawing	Pins	SPQ	Reel Diameter (mm)	Reel Width W1 (mm)	A0 (mm)	B0 (mm)	K0 (mm)	P1 (mm)	W (mm)	Pin1 Quadrant
BQ298216RUGR	X2QFN	RUG	8	3000	180.0	9.5	1.69	1.69	0.63	4.0	8.0	Q2
BQ298217RUGR	X2QFN	RUG	8	3000	180.0	9.5	1.69	1.69	0.63	4.0	8.0	Q2
BQ298218RUGR	X2QFN	RUG	8	3000	180.0	9.5	1.69	1.69	0.63	4.0	8.0	Q2

TAPE AND REEL BOX DIMENSIONS

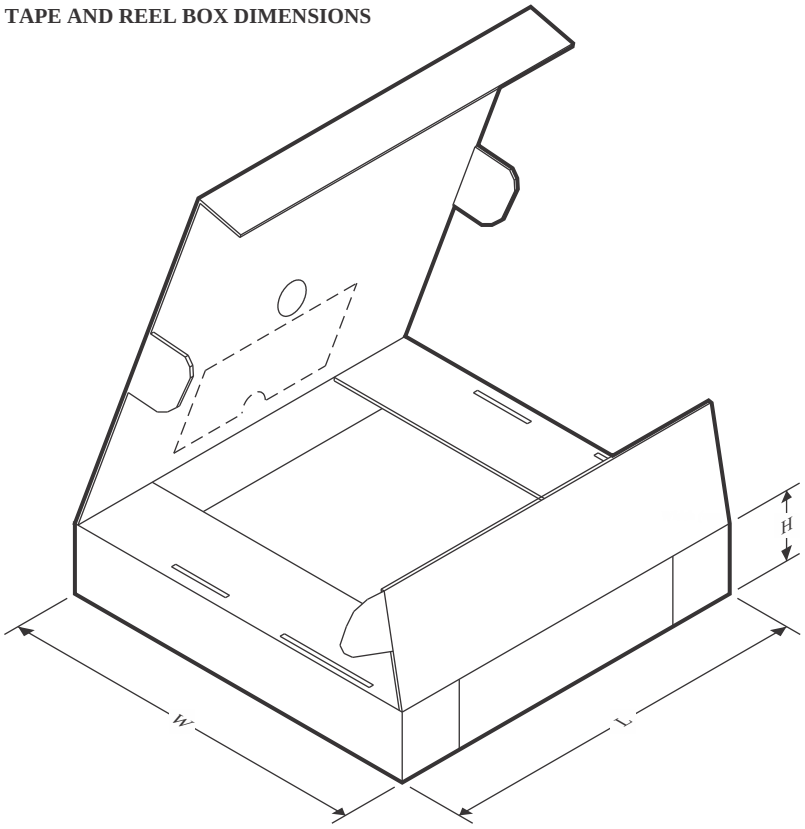

*All dimensions are nominal

Device	Package Type	Package Drawing	Pins	SPQ	Length (mm)	Width (mm)	Height (mm)
BQ298000RUGR	X2QFN	RUG	8	3000	189.0	185.0	36.0
BQ298000RUGT	X2QFN	RUG	8	250	189.0	185.0	36.0
BQ298006RUGR	X2QFN	RUG	8	3000	189.0	185.0	36.0
BQ298006RUGT	X2QFN	RUG	8	250	189.0	185.0	36.0
BQ298009RUGR	X2QFN	RUG	8	3000	189.0	185.0	36.0
BQ298009RUGT	X2QFN	RUG	8	250	189.0	185.0	36.0
BQ298010RUGR	X2QFN	RUG	8	3000	189.0	185.0	36.0
BQ298010RUGT	X2QFN	RUG	8	250	189.0	185.0	36.0
BQ298012RUGR	X2QFN	RUG	8	3000	189.0	185.0	36.0
BQ298012RUGT	X2QFN	RUG	8	250	189.0	185.0	36.0
BQ298015RUGR	X2QFN	RUG	8	3000	189.0	185.0	36.0
BQ298015RUGT	X2QFN	RUG	8	250	189.0	185.0	36.0
BQ298018RUGR	X2QFN	RUG	8	3000	189.0	185.0	36.0
BQ298019RUGR	X2QFN	RUG	8	3000	189.0	185.0	36.0
BQ298023RUGR	X2QFN	RUG	8	3000	189.0	185.0	36.0
BQ298215RUGR	X2QFN	RUG	8	3000	189.0	185.0	36.0
BQ298216RUGR	X2QFN	RUG	8	3000	189.0	185.0	36.0
BQ298217RUGR	X2QFN	RUG	8	3000	189.0	185.0	36.0

Device	Package Type	Package Drawing	Pins	SPQ	Length (mm)	Width (mm)	Height (mm)
BQ298218RUGR	X2QFN	RUG	8	3000	189.0	185.0	36.0

RUG (S–PQFP–N8) PLASTIC QUAD FLATPACK

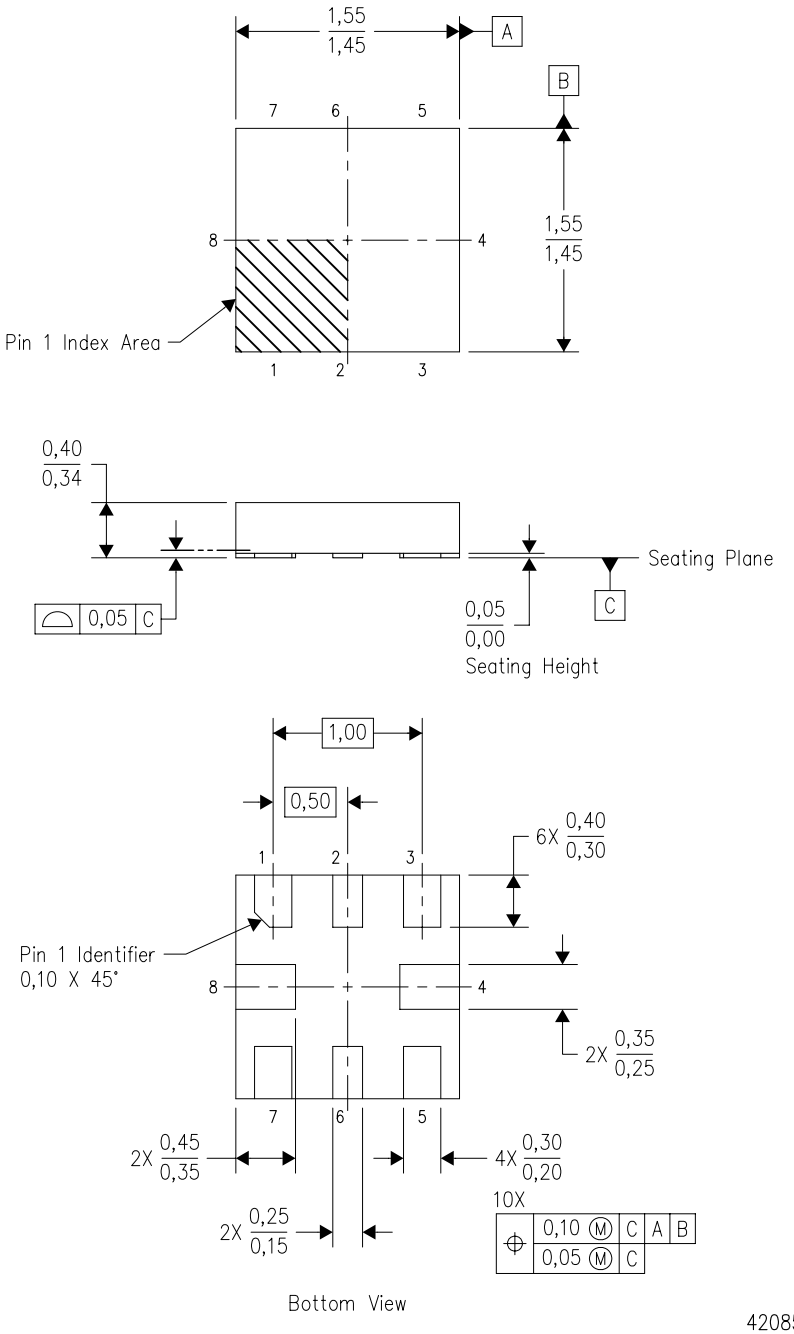

4208528–2/B 04/2008

NOTES:
A. All linear dimensions are in millimeters. Dimensioning and tolerancing per ASME Y14.5M–1994.
B. This drawing is subject to change without notice.
C. QFN (Quad Flatpack No–Lead) package configuration.
D. This package complies to JEDEC MO–288 variation X2ECD.

RUG (R–PQFP–N8)

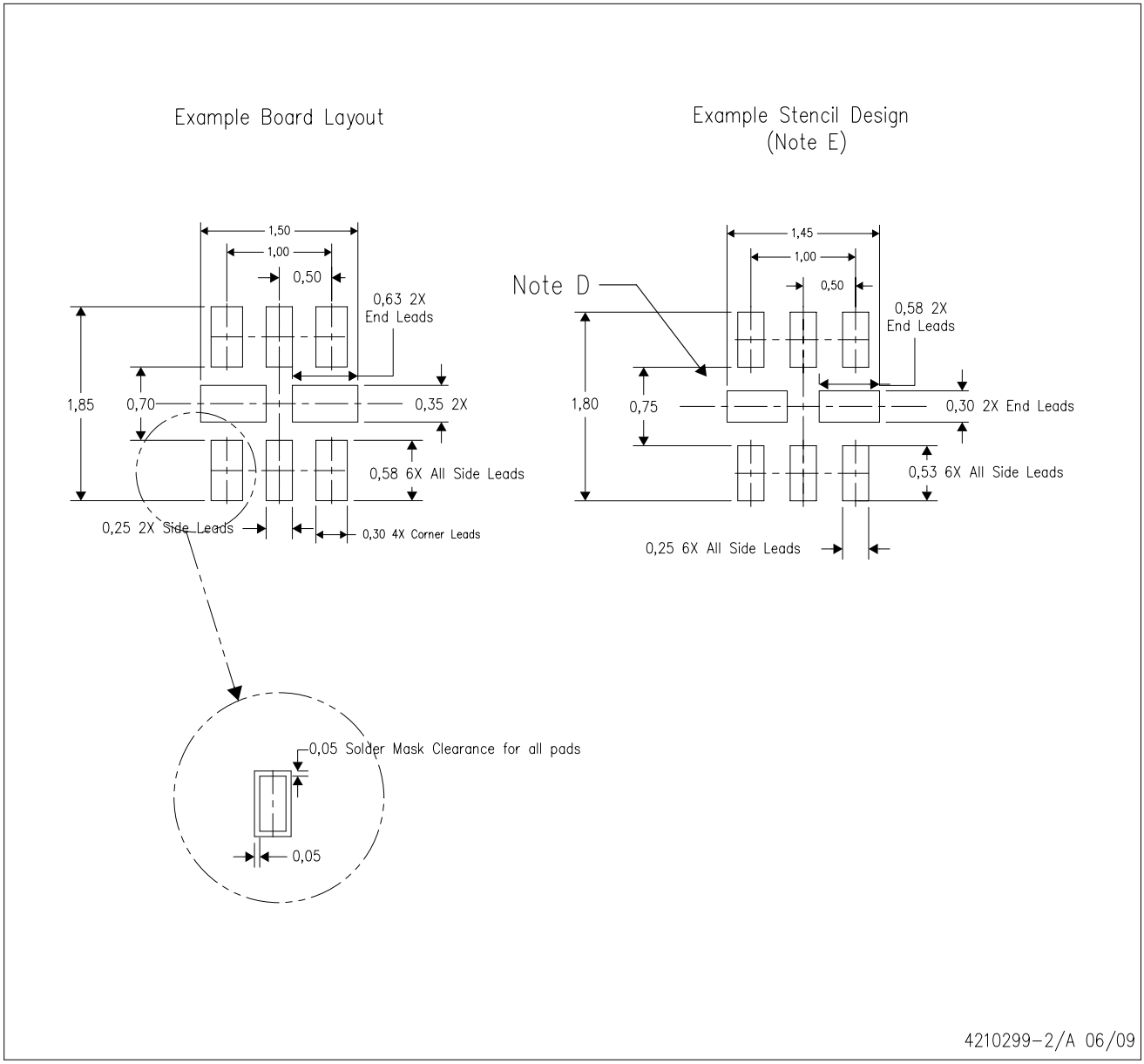

NOTES:
A. All linear dimensions are in millimeters.
B. This drawing is subject to change without notice.
C. Publication IPC–7351 is recommended for alternate designs.
D. Customers should contact their board fabrication site for minimum solder mask web tolerances between signal pads.
E. Maximum stencil thickness 0,127 mm (5 mils). All linear dimensions are in millimeters.
F. Laser cutting apertures with trapezoidal walls and also rounding corners will offer better paste release. Customers should contact their board assembly site for stencil design recommendations. Refer to IPC 7525 for stencil design considerations.
G. Side aperture dimensions over–print land for acceptable area ratio > 0.66. Customer may reduce side aperture dimensions if stencil manufacturing process allows for sufficient release at smaller opening.

IMPORTANT NOTICE AND DISCLAIMER

TI PROVIDES TECHNICAL AND RELIABILITY DATA (INCLUDING DATASHEETS), DESIGN RESOURCES (INCLUDING REFERENCE DESIGNS), APPLICATION OR OTHER DESIGN ADVICE, WEB TOOLS, SAFETY INFORMATION, AND OTHER RESOURCES “AS IS” AND WITH ALL FAULTS, AND DISCLAIMS ALL WARRANTIES, EXPRESS AND IMPLIED, INCLUDING WITHOUT LIMITATION ANY IMPLIED WARRANTIES OF MERCHANTABILITY, FITNESS FOR A PARTICULAR PURPOSE OR NON-INFRINGEMENT OF THIRD PARTY INTELLECTUAL PROPERTY RIGHTS.

These resources are intended for skilled developers designing with TI products. You are solely responsible for (1) selecting the appropriate TI products for your application, (2) designing, validating and testing your application, and (3) ensuring your application meets applicable standards, and any other safety, security, regulatory or other requirements.

These resources are subject to change without notice. TI grants you permission to use these resources only for development of an application that uses the TI products described in the resource. Other reproduction and display of these resources is prohibited. No license is granted to any other TI intellectual property right or to any third party intellectual property right. TI disclaims responsibility for, and you fully indemnify TI and its representatives against any claims, damages, costs, losses, and liabilities arising out of your use of these resources.

TI’s products are provided subject to TI’s Terms of Sale, TI’s General Quality Guidelines, or other applicable terms available either on ti.com or provided in conjunction with such TI products. TI’s provision of these resources does not expand or otherwise alter TI’s applicable warranties or warranty disclaimers for TI products. Unless TI explicitly designates a product as custom or customer-specified, TI products are standard, catalog, general purpose devices.

TI objects to and rejects any additional or different terms you may propose.

Copyright © 2026, Texas Instruments Incorporated

Last updated 10/2025

ENTEGRECİ

Bu belge www.entegreci.com üzerinden sunulmaktadır.

Elektronik komponent tedarikinde Entegreci

Entegreci, Eskişehir merkezli, Türkiye geneline satış yapan bir elektronik komponent mağazasıdır. Entegreler (IC), mikrodenetleyiciler, transistörler, diyotlar, pasif elemanlar, konnektörler, modüller ve geliştirme kartları tek adetten seri üretim adetlerine kadar satılır. Ürün sayfalarında güncel stok durumunu, fiyatı ve datasheet bağlantısını bulabilirsiniz.

Parça koduyla arama

Üretici parça numarasını yazın; stok ve fiyatı hemen görün.

www.entegreci.com

Ürün kategorileri

Entegreden kapasitöre tüm elektronik komponent kategorileri.

Kategorilere göz atın

Üreticiler

Aradığınız üreticinin ürünlerini tek sayfada inceleyin.

Üreticileri görün

Toplu alım ve teklif

Listede olmayan ya da yüksek adetli parçalar için teklif isteyin.

Teklif isteyin

www.entegreci.com | **destek@entegreci.com** | **0850 305 90 34**

Entegreci is an online electronic components store based in Türkiye. Search by manufacturer part number to see stock, prices and datasheets for integrated circuits, microcontrollers, transistors, passive components and connectors, or request a quote for parts that are not listed.

Bu sayfa Entegreci tarafından eklenmiştir. Belgenin önceki sayfaları asıl yayıncısına aittir ve içeriği değiştirilmemiştir; en güncel sürüm için belgenin yayıncısına başvurun.