BQ2947 Overvoltage Protection for 2-Series to 4-Series Cell Li-Ion Batteries With External Delay Capacitor

1 Features

- 2-, 3-, and 4-series cell overvoltage protection
- External capacitor-programmed delay timer
- Factory programmed OVP threshold (threshold range 3.85V to 4.6V)
- Output options: active high or open drain active low
- High-accuracy overvoltage protection: ±10mV
- Low power consumption I_{CC} ≈ 1µA ($V_{CELL(ALL)}$ < $V_{PROTECT}$)
- Low leakage current per cell input < 100nA
- Small package footprint
  - 8-pin WSON (2.00mm × 2.00mm)

2 Applications

- Notebooks
- UPS battery backup

3 Description

The BQ2947 family is an overvoltage monitor and protector for Li-Ion battery pack systems. Each cell is monitored independently for an overvoltage condition.

In the BQ2947 device, an external delay timer is initiated upon detection of an overvoltage condition on any cell. Upon expiration of the delay timer, the output is triggered into the active state (either high or low, depending on the configuration). The external delay timer feature also includes the ability to detect an open or shorted delay capacitor on the CD pin, which similarly triggers the output driver in an overvoltage condition.

For quicker production-line testing, the BQ2947 device provides a customer test mode with 67 reduced delay time.

Package Information

PART NUMBER(1)	PACKAGE	PACKAGE SIZE(2)
BQ2947	DSG (WSON, 8)	2mm × 2mm

(1) For more information, see Section 11.
(2) The package size (length × width) is a nominal value and includes pins, where applicable.

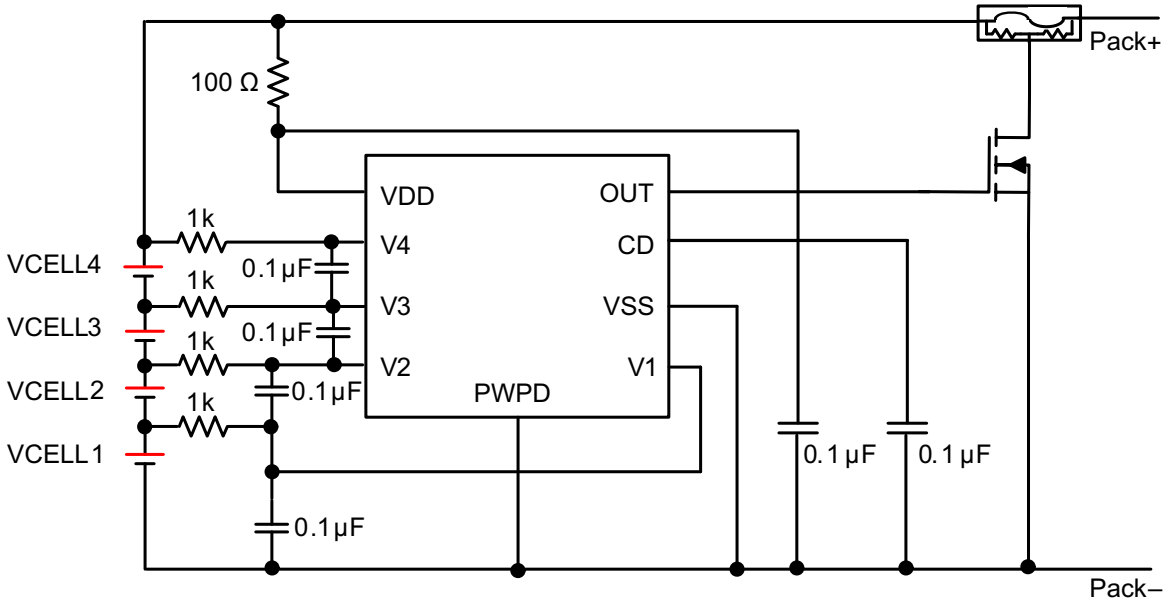

Copyright © 2017, Texas Instruments Incorporated

Simplified Schematic

An IMPORTANT NOTICE at the end of this data sheet addresses availability, warranty, changes, use in safety-critical applications, intellectual property matters and other important disclaimers. PRODUCTION DATA.

Table of Contents

1 Features....1
2 Applications....1
3 Description....1
4 Device Comparison Table....3
5 Pin Configuration and Functions....4
6 Specifications....5
6.1 Absolute Maximum Ratings....5
6.2 ESD Ratings....5
6.3 Recommended Operating Conditions....5
6.4 Thermal Information....5
6.5 Electrical Characteristics....6
6.6 Typical Characteristics....8
7 Detailed Description....9
7.1 Overview....9
7.2 Functional Block Diagram....9
7.3 Feature Description....9
7.4 Device Functional Modes....11
8 Application and Implementation....13
8.1 Application Information....13
8.2 Typical Applications....13
8.3 Power Supply Recommendations....16
8.4 Layout....16
9 Device and Documentation Support....17
9.1 Device Support....17
9.2 Documentation Support....17
9.3 Receiving Notification of Documentation Updates....17
9.4 Support Resources....17
9.5 Trademarks....17
9.6 Electrostatic Discharge Caution....17
9.7 Glossary....17
10 Revision History....17
11 Mechanical, Packaging, and Orderable Information....18

Copyright © 2026 Texas Instruments Incorporated

4 Device Comparison Table

PART NUMBER	OVP (V)	OV HYSTERESIS	OUTPUT DRIVE
BQ294700	4.350	0.300	CMOS Active High
BQ294701	4.250	0.300	CMOS Active High
BQ294702	4.300	0.300	CMOS Active High
BQ294703	4.325	0.300	CMOS Active High
BQ294704	4.400	0.300	CMOS Active High
BQ294705	4.450	0.300	CMOS Active High
BQ294706	4.550	0.300	CMOS Active High
BQ294707	4.225	0.050	NCH Open Drain Active Low
BQ294708	4.500	0.300	CMOS Active High
BQ294711	4.220	0.300	CMOS Active High
BQ294712	4.125	0.300	CMOS Active High
BQ294713	4.600	0.300	CMOS Active High
BQ294715	3.975	0.050	CMOS Active High
BQ2947	3.850–4.60	0–0.300	CMOS Active High or Open Drain Active Low

Copyright © 2026 Texas Instruments Incorporated

5 Pin Configuration and Functions

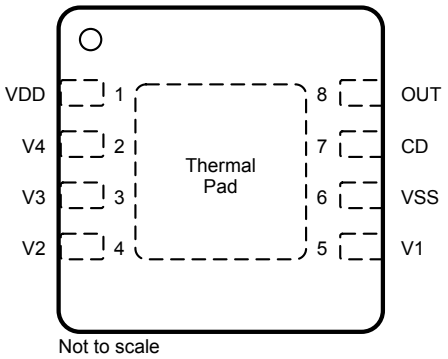

Figure 5-1. DSG Package 8-Pin WSON Top View

Table 5-1. Pin Functions

NUMBER	NAME	TYPE[1]	DESCRIPTION
1	VDD	P	Power supply input
2	V4	IA	Sense input for positive voltage of the fourth cell from the bottom of the stack
3	V3	IA	Sense input for positive voltage of the third cell from the bottom of the stack
4	V2	IA	Sense input for positive voltage of the second cell from the bottom of the stack
5	V1	IA	Sense input for positive voltage of the lowest cell in the stack
6	VSS	P	Electrically connected to IC ground and negative terminal of the lowest cell in the stack
7	CD	OA	External capacitor connection for delay timer
8	OUT	OA	Analog Output drive for overvoltage fault signal. Active High or Open Drain Active Low
PowerPAD™		P	TI recommends connecting the exposed pad to VSS on the PCB.

(1) IA = Input Analog, OA = Output Analog, P = Power Connection

Copyright © 2026 Texas Instruments Incorporated

6 Specifications

6.1 Absolute Maximum Ratings

Over operating free-air temperature range (unless otherwise noted)(1)

		MIN	MAX	UNIT
Supply voltage	VDD–VSS	–0.3	30	V
Input voltage	V4V3, V3V2, V2V1, V1–VSS, or CD–VSS	–0.3	30	V
Output voltage	OUT–VSS	–0.3	30	V
Continuous total power dissipation, P_{TOT}		See *Thermal Information*		
Lead temperature (soldering, 10s), T_{SOLDER}			300	°C
Storage temperature, T_{stg}		–65	150	

(1) Stresses beyond those listed under *Absolute Maximum Ratings* may cause permanent damage to the device. These are stress ratings only, which do not imply functional operation of the device at these or any other conditions beyond those indicated under *Recommended Operating Conditions*. Exposure to absolute-maximum-rated conditions for extended periods may affect device reliability.

6.2 ESD Ratings

			VALUE	UNIT
$V_{(ESD)}$	Electrostatic discharge	Human body model (HBM), per ANSI/ESDA/JEDEC JS-001(1)	±2000	V
		Charged device model (CDM), per JEDEC specification JESD22C101(2)	±500	

(1) JEDEC document JEP155 states that 500V HBM allows safe manufacturing with a standard ESD control process.
(2) JEDEC document JEP157 states that 250V CDM allows safe manufacturing with a standard ESD control process.

6.3 Recommended Operating Conditions

Over-operating free-air temperature range (unless otherwise noted)

		MIN	MAX	UNIT
Supply voltage, V_{DD}		3	20	V
Input voltage range	V4V3, V3V2, V2V1, V1–VSS, or CD–VSS	0	5	V
Operating ambient temperature range, T_A		–40	110	°C

6.4 Thermal Information

THERMAL METRIC(1)		BQ2947 WSON 8 PINS	UNIT
$R_{\theta JA}$	Junction-to-ambient thermal resistance	62	°C/W
$R_{\theta JC(top)}$	Junction-to-case(top) thermal resistance	72	°C/W
$R_{\theta JB}$	Junction-to-board thermal resistance	32.5	°C/W
ψ_{JT}	Junction-to-top characterization parameter	1.6	°C/W
ψ_{JB}	Junction-to-board characterization parameter	33	°C/W
$R_{\theta JC(bottom)}$	Junction-to-case(bottom) thermal resistance	10	°C/W

(1) For more information about traditional and new thermal metrics, see the *Semiconductor and IC Package Thermal Metrics* application report.

Copyright © 2026 Texas Instruments Incorporated

6.5 Electrical Characteristics

Typical values stated where T_A = 25°C and VDD = 14.4V, MIN/MAX values stated where T_A = –40°C to +110°C and V_{DD} = 3 V to 20V (unless otherwise noted).

PARAMETER		TEST CONDITIONS	MIN	TYP	MAX	UNIT
VOLTAGE PROTECTION THRESHOLDS						
V_{OV}	$V_{(PROTECT)}$ Overvoltage Detection	BQ294700, R_{IN} = 1kΩ		4.350		V
		BQ294701, R_{IN} = 1kΩ		4.250		V
		BQ294702, R_{IN} = 1kΩ		4.300		V
		BQ294703, R_{IN} = 1kΩ		4.325		V
		BQ294704, R_{IN} = 1kΩ		4.400		V
		BQ294705, R_{IN} = 1kΩ		4.450		V
		BQ294706, R_{IN} = 1kΩ		4.550		V
		BQ294707, R_{IN} = 1kΩ		4.225		V
		BQ294708, R_{IN} = 1kΩ		4.500		V
		BQ294711, R_{IN} = 1kΩ		4.220		V
		BQ294712, R_{IN} = 1kΩ		4.125		V
		BQ294713, R_{IN} = 1kΩ		4.600		V
		BQ294715, R_{IN} = 1kΩ		3.975		V
V_{HYS}	OV Detection Hysteresis	BQ2947[(1)]	250	300	400	mV
V_{OA}	OV Detection Accuracy	T_A = 25°C	–10		10	mV
$V_{OADRIFT}$	OV Detection Accuracy Across Temperature	T_A = –40°C	–40		40	mV
		T_A = 0°C	–20		20	mV
		T_A = 60°C	–24		24	mV
		T_A = 110°C	–54		54	mV
SUPPLY AND LEAKAGE CURRENT						
I_{DD}	Supply Current	(V4V3) = (V3V2) = (V2V1) = (V1–VSS) = 4.0V at T_A = 25°C (See Figure 7-4.)		1	2	µA
I_{IN}	Input Current at Vx Pins	(V4V3) = (V3V2) = (V2V1) = (V1–VSS) = 4.0V at T_A = 25°C (See Figure 7-4.)	–0.1		0.1	µA
I_{CELL}	Input Current (ALL Vx and VDD Input Pins)	Current Consumption at Power down, (V4V3) = (V3V2) = (V2V1) = (V1–VSS) = 2.30V at T_A = 25°C		1.1		µA
OUTPUT DRIVE OUT, CMOS ACTIVE HIGH VERSIONS ONLY						
V_{OUT}	Output Drive Voltage, Active High	(V4V3), (V3V2), (V2V1), or (V1–VSS) > V_{OV}, VDD = 14.4V, I_{OH} = 100 µA	6			V
		If three of four cells are short circuited, only one cell remains powered and > V_{OV}, VDD = Vx (cell voltage), I_{OH} = 100 µA		VDD – 0.3		V
		(V4V3), (V3V2), (V2V1), and (V1–VSS) < V_{OV}, VDD = 14.4V, I_{OL} = 100 µA measured into OUT pin.		250	400	mV
I_{OUTH}	OUT Source Current (during OV)	(V4V3), (V3V2), (V2V1), or (V1–VSS) > V_{OV}, VDD = 14.4V, OUT = 0V, measured out of OUT pin.			4.5	mA
I_{OUTL}	OUT Sink Current (no OV)	(V4V3), (V3V2), (V2V1), and (V1–VSS) < V_{OV}, VDD = 14.4V, OUT = VDD, measured into OUT pin .Pull resistor R_{PU} = 5kΩ to VDD = 14.4V	0.5		14	mA
OUTPUT DRIVE OUT, CMOS OPEN DRAIN ACTIVE LOW VERSIONS ONLY						
V_{OUT}	Output Drive Voltage, Active High	(V4V3), (V3V2), (V2V1), and (V1–VSS) < V_{OV}, VDD = 14.4V, I_{OL} = 100 µA measured into OUT pin.		250	400	mV

Copyright © 2026 Texas Instruments Incorporated

6.5 Electrical Characteristics (continued)

Typical values stated where T_A = 25°C and VDD = 14.4V, MIN/MAX values stated where T_A = –40°C to +110°C and V_{DD} = 3 V to 20V (unless otherwise noted).

PARAMETER		TEST CONDITIONS	MIN	TYP	MAX	UNIT
I_{OUTL}	OUT Sink Current (no OV)	(V4V3), (V3V2), (V2V1), and (V1–VSS) < V_{OV}, VDD = 14.4V, OUT = VDD, measured into OUT pin. Pull resistor R_{PU} = 5kΩ to VDD = 14.4V	0.5		14	mA
I_{OUTLK}	OUT pin leakage	(V4V3), (V3V2), (V2V1), and (V1–VSS) < V_{OV}, VDD = 14.4V, OUT = VDD, measured into OUT pin.			100	nA
DELAY TIMER						
t_{CD}	OV Delay Time	C_{CD} = 0.1 µF (see External Delay Capacitor, CD)	1	1.5	2	s
t_{CD_GND}	OV Delay Time with CD pin = 0V	Delay due to C_{CD} capacitor shorted to ground for Customer Test Mode	20		170	ms

(1) Future option, contact TI.

Copyright © 2026 Texas Instruments Incorporated

6.6 Typical Characteristics

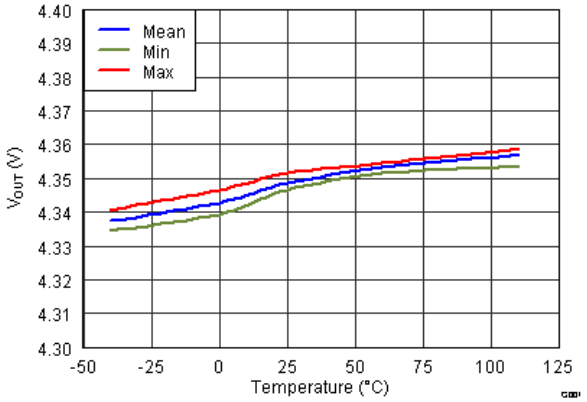

Figure 6-1. Overvoltage Threshold (Nominal = 4.35V) vs Temperature

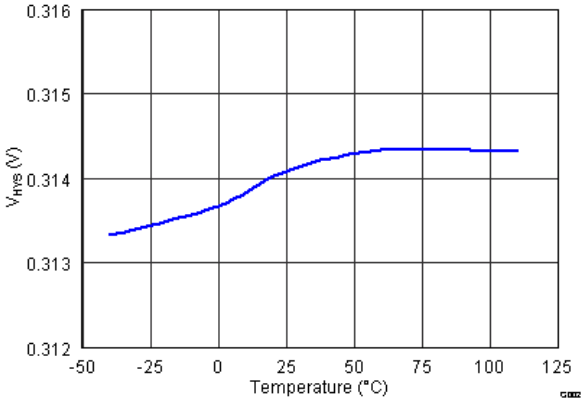

Figure 6-2. Hysteresis V_{HYS} vs. Temperature

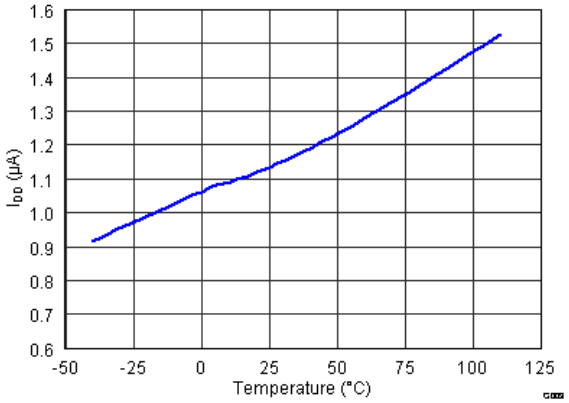

Figure 6-3. I_{DD} Current Consumption vs Temperature at VDD = 16V

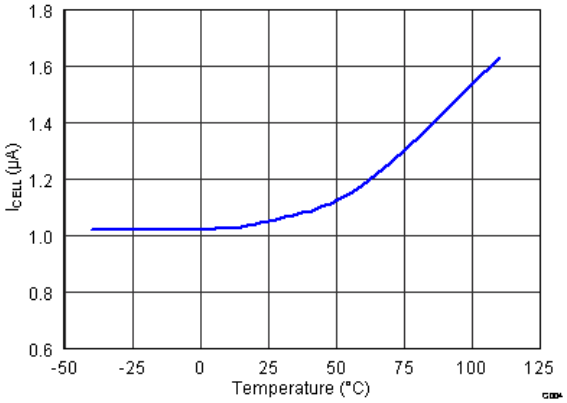

Figure 6-4. I_{CELL} vs Temperature at V_{CELL}= 9.2V

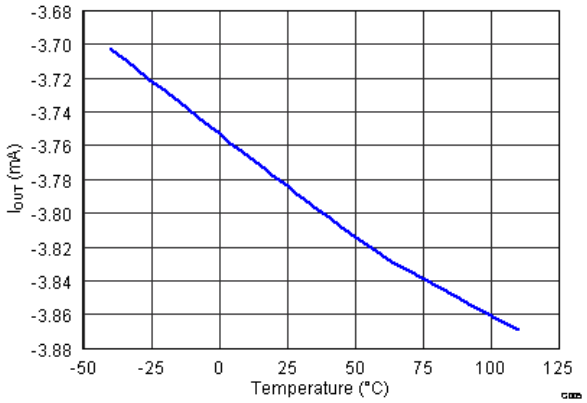

Figure 6-5. Output Current I_{OUT} vs Temperature

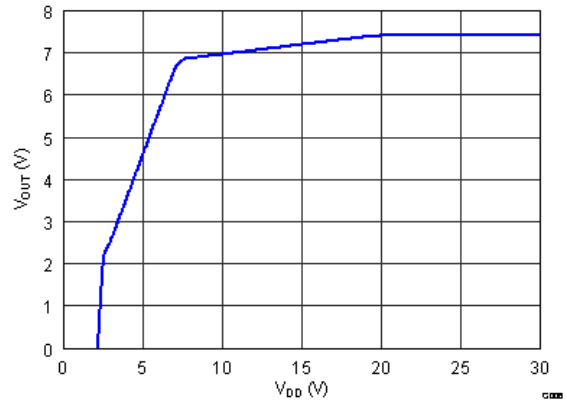

Figure 6-6. V_{OUT} vs V_{DD}

Copyright © 2026 Texas Instruments Incorporated

7 Detailed Description

7.1 Overview

The BQ2947 is a second level overvoltage (OV) protector. Each cell is monitored independently by comparing the actual cell voltage to a protection voltage threshold, V_{OV}. The protection threshold is preprogrammed at the factory with a range between 3.85V and 4.65V.

7.2 Functional Block Diagram

The Functional Block Diagram shows a CMOS Active High configuration.

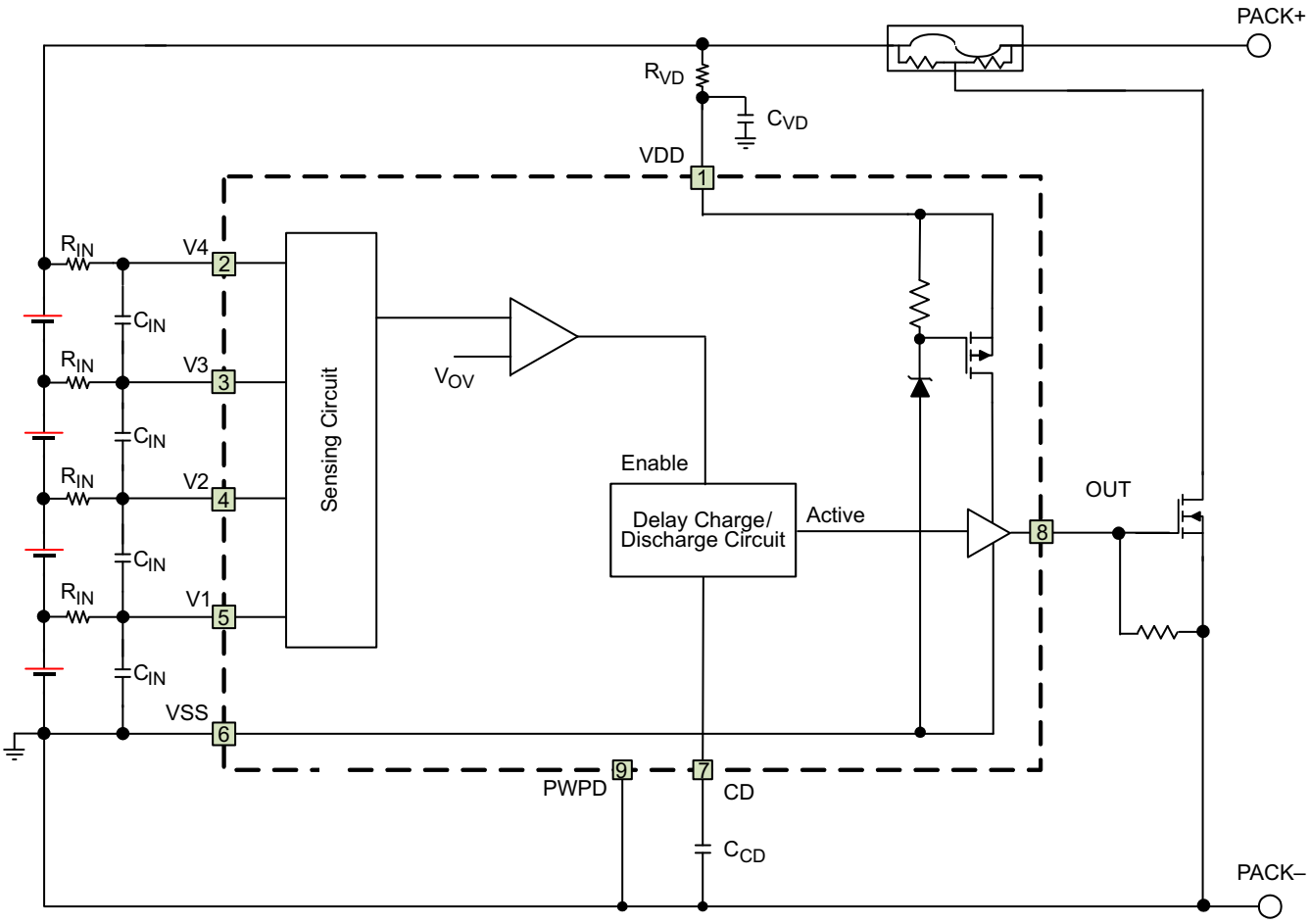

Note

In the case of an Open Drain Active Low configuration, an external pull-up resistor is required on the OUT terminal.

7.3 Feature Description

In the BQ2947 family of devices, if any cell voltage exceeds the programmed OV value, a timer circuit is activated. This timer circuit charges the CD pin to a nominal value, then slowly discharges it with a fixed current back down to VSS. When the CD pin falls below a nominal threshold near VSS, the OUT terminal goes from inactive to active state. Additionally, a timeout detection circuit checks to make sure that the CD pin successfully begins charging to above VSS and subsequently drops back down to VSS, and if a timeout error is detected in either direction, this detection similarly triggers the OUT pin to become active. See Figure 7-2 for details on CD and OUT pin behavior during an overvoltage event.

Copyright © 2026 Texas Instruments Incorporated

For an NCH Open Drain Active Low configuration, the OUT pin pulls down to VSS when active (OV present) and is high impedance when inactive (no OV).

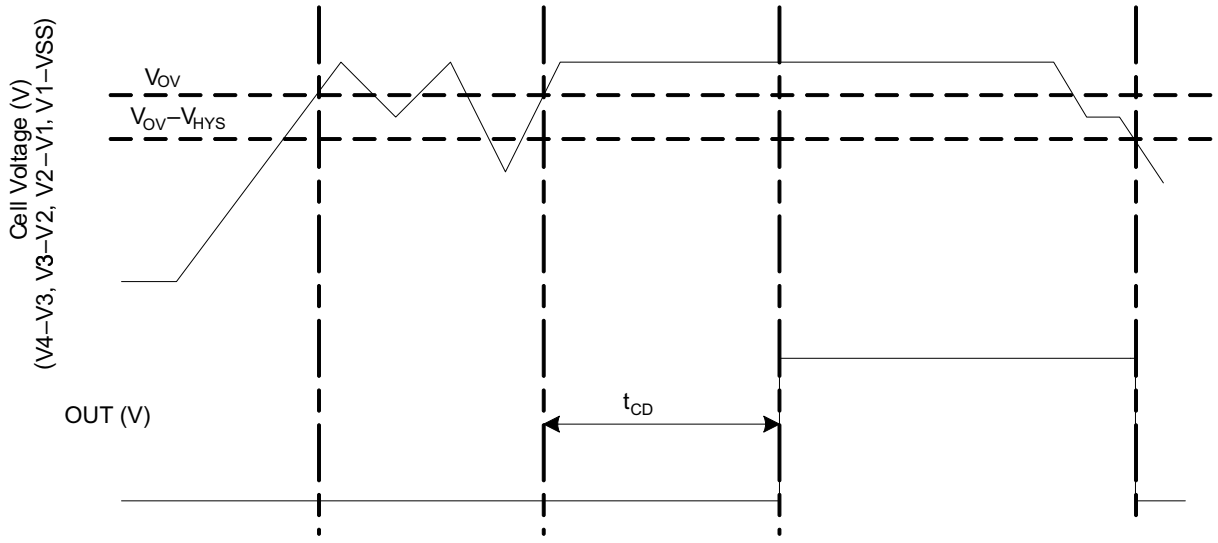

Figure 7-1. Timing for Overvoltage Sensing (OUT Pin Is Active High)

Figure 7-2 shows the behavior of CD pin during an OV sequence.

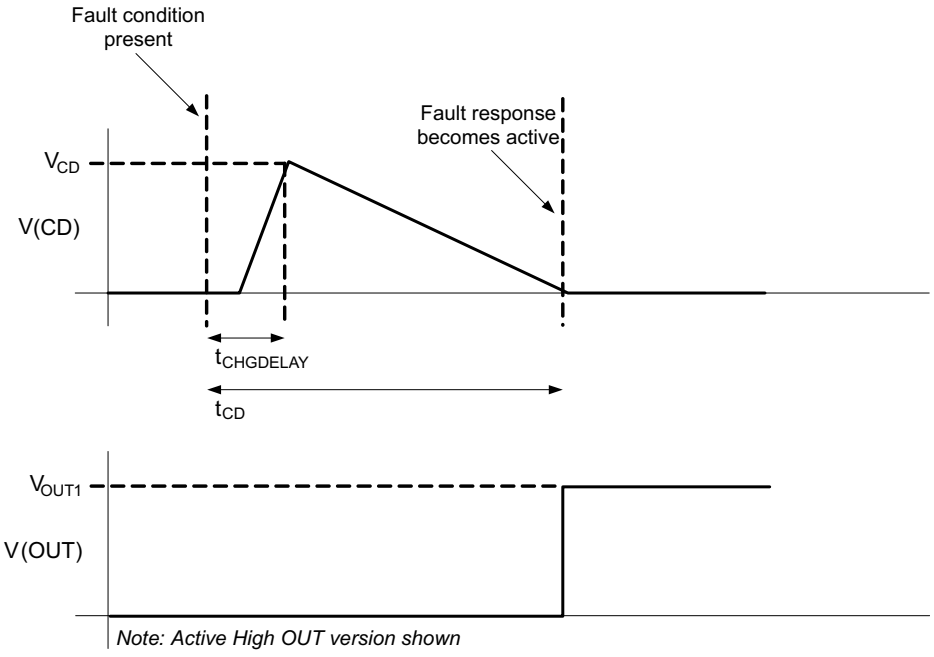

Figure 7-2. CD Pin Mechanism (OUT Pin Is Active High)

Note

In the case of an Open Drain Active Low version, the V_{OUT} signal is high and transitions to low state when the voltage on the V_{CD} capacitor discharges to the set level based on the t_{CD} timer.

Copyright © 2026 Texas Instruments Incorporated

7.3.1 Pin Details

7.3.1.1 Input Sense Voltage, Vx

These inputs sense each battery cell voltage. A series resistor and a capacitor across the cell for each input is required for noise filtering and stable voltage monitoring.

7.3.1.2 Output Drive, OUT

This terminal serves as the fault signal output, and may be ordered in either Active High or Open Drain Active Low options.

7.3.1.3 Supply Input, VDD

This terminal is the unregulated input power source for the IC. A series resistor is connected to limit the current, and a capacitor is connected to ground for noise filtering.

7.3.1.4 External Delay Capacitor, CD

This terminal is connected to an external capacitor that sets the delay timer during an overvoltage fault event.

The CD pin includes a timeout detection circuit to ensure that the output drives active even with a shorted or open capacitor during an overvoltage event.

The capacitor connected on the CD pin rapidly charges to a voltage if any one of the cell inputs exceeds the OV threshold. Then the delay circuit gradually discharges the capacitor on the CD pin. Once this capacitor discharges below a set voltage, the OUT transitions from an inactive to active state.

To calculate the delay, use the following equation:

$$t_{CD}\ (\text{sec}) = K \times C_{CD}\ (\mu\text{F}),\ \text{where K = 10 to 20 range.} \quad (1)$$

Example: If C_{CD}= 0.1 µF (typical), then the delay timer range is

t_{CD} (s) = 10 × 0.1 = 1s (Minimum)

t_{CD} (s) = 20 × 0.1 = 2s (Maximum)

Note

The tolerance on the capacitor used for C_{CD} increases the range of the t_{CD} timer.

7.4 Device Functional Modes

7.4.1 Normal Mode

When all of the cell voltages are below the overvoltage threshold, V_{OV}, the device operates in normal mode. The device monitors the differential cell voltages connected across (V1–VSS), (V2–V1), (V3–V2), and (V4–V3). The OUT pin is inactive, and is low if configured active high, or, if configured active low, is an open drain being externally pulled up.

7.4.2 Overvoltage Mode

Overvoltage mode is detected if any of the cell voltage exceeds the overvoltage threshold, V_{OV} for configured OV delay time. The OUT pin is activated after a delay time set by the capacitance in the CD pin. The OUT pin either pulls high internally, if configured as active high, or pulls low internally if configured as active low. An external FET is then turned on, shorting the fuse to ground, which allows the battery and/or charger power to blow the fuse. When all of the cell voltages fall below the (V_{OV}–V_{HYS}), the device returns to NORMAL mode.

7.4.3 Customer Test Mode

It is possible to reduce test time for checking the overvoltage function by simply shorting the external CD capacitor to VSS. In this case, the OV delay can be reduced to the $t_{(CD_GND)}$ value, which has a maximum of 170 ms.

Copyright © 2026 Texas Instruments Incorporated

Figure 7-3 shows the timing for the Customer Test Mode.

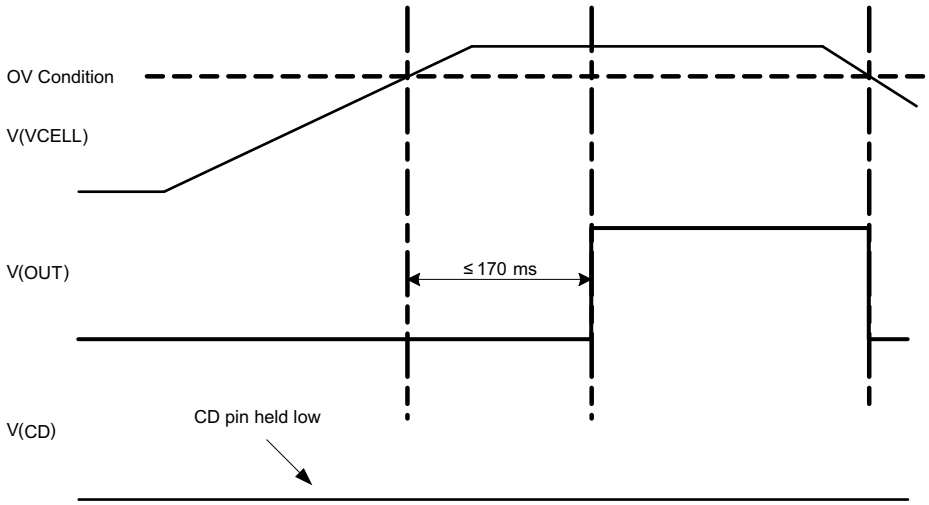

Figure 7-3. Timing for Customer Test Mode

Figure 7-4 shows the measurement for current consumption of the product for both VDD and Vx.

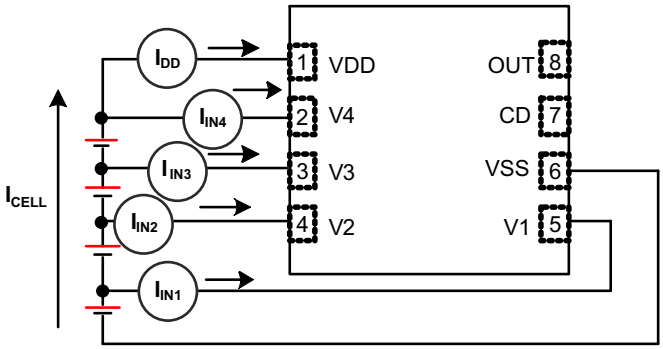

$I_{CELL} = I_{DD} + I_{IN1} + I_{IN2} + I_{IN3} + I_{IN4}$

Figure 7-4. Configuration for IC Current Consumption Test

Copyright © 2026 Texas Instruments Incorporated

8 Application and Implementation

Note

Information in the following applications sections is not part of the TI component specification, and TI does not warrant its accuracy or completeness. TI's customers are responsible for determining suitability of components for their purposes, as well as validating and testing their design implementation to confirm system functionality.

8.1 Application Information

The BQ2947 devices are a family of second-level protectors used for overvoltage protection of the battery pack in the application. The device, when configuring the OUT pin with active high, drives a NMOS FET that connects the fuse to ground in the event of a fault condition. This provides a shorted path to use the battery and/or charger power to blow the fuse and cut the power path. The OUT pin, when configured as active low, can be used to drive a PMOS FET to connect the fuse to ground instead.

8.2 Typical Applications

8.2.1 Application Configuration for Active High

Figure 8-1 shows the recommended reference design components.

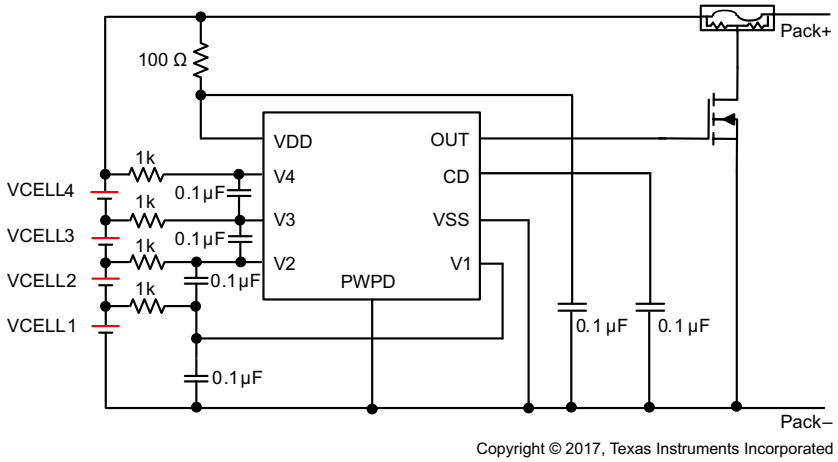

Figure 8-1. Application Configuration for Active High

8.2.1.1 Design Requirements

Note

In the case of an Open Drain Active Low configuration, an external pullup resistor is required on the OUT terminal.

Changes to the ranges stated in Table 8-1 impact the accuracy of the cell measurements.

Table 8-1. Parameters

PARAMETER	EXTERNAL COMPONENT	MIN	NOM	MAX	UNIT
Voltage monitor filter resistance	R_{IN}	900	1000	4700	Ω
Voltage monitor filter capacitance	C_{IN}	0.01	0.1	1.0	µF
Supply voltage filter resistance	R_{VD}	100		1000	Ω
Supply voltage filter capacitance	C_{VD}		0.1	1.0	µF
CD external delay capacitance	C_{CD}		0.1	1.0	µF

Note

The device is calibrated using an R_{IN} value = 1 kΩ. Using a value other than this recommended value changes the accuracy of the cell voltage measurements and V_{OV} trigger level.

8.2.1.2 Detailed Design Procedure

1. Determine the number of cell in series.

   The device supports 2S to 4S cell configuration. For 2S and 3S, the top unused pin(s) must be shorted as shown in Figure 8-2 and Figure 8-3.
2. Determine the overvoltage protection delay.

   Follow the calculation example described in CD pin description. Select the right capacitor to connect to the CD pin.
3. Follow the application schematic to connect the device. If the OUT pin is configured to open drain, an external pull up resistor must be used.

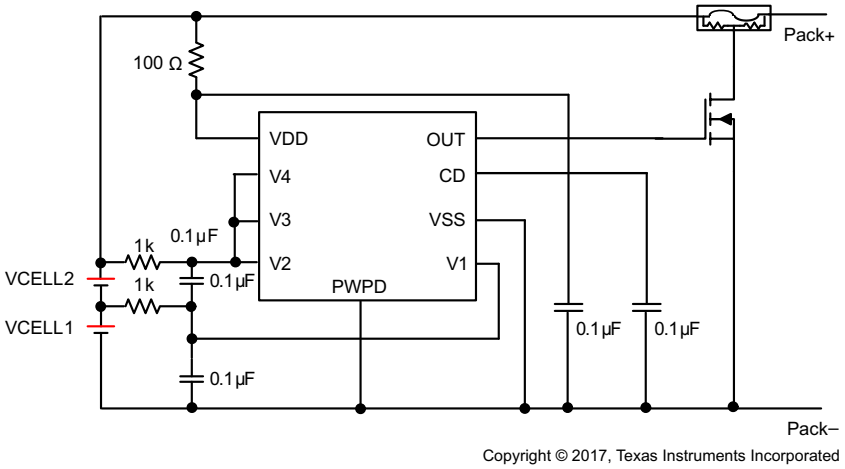

Figure 8-2. 2-Series Cell Configuration

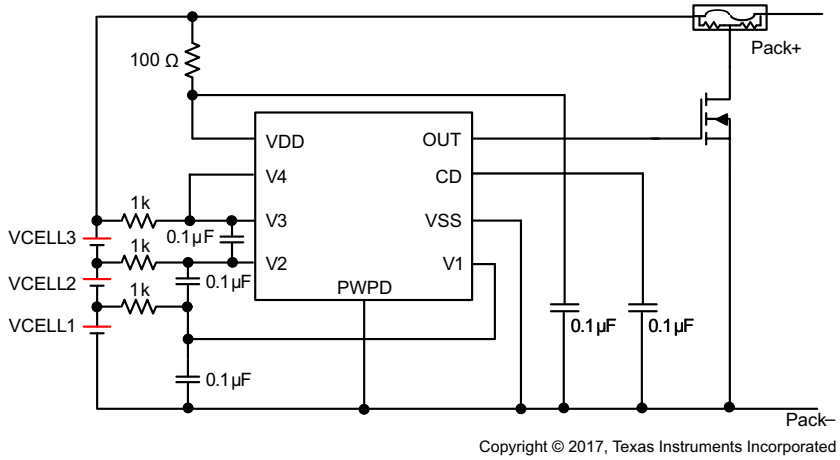

Figure 8-3. 3-Series Cell Configuration

Copyright © 2026 Texas Instruments Incorporated

8.2.1.3 Application Curves

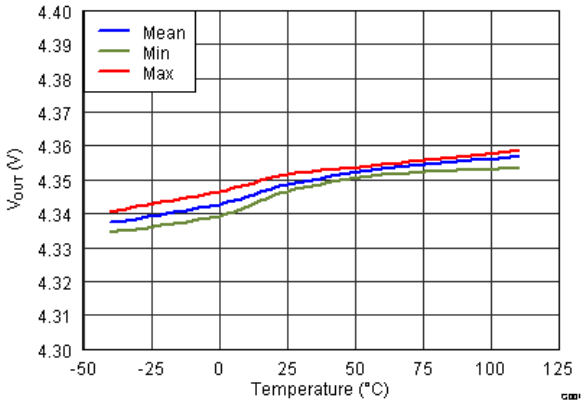

Figure 8-4. Overvoltage Threshold (OVT) vs. Temperature

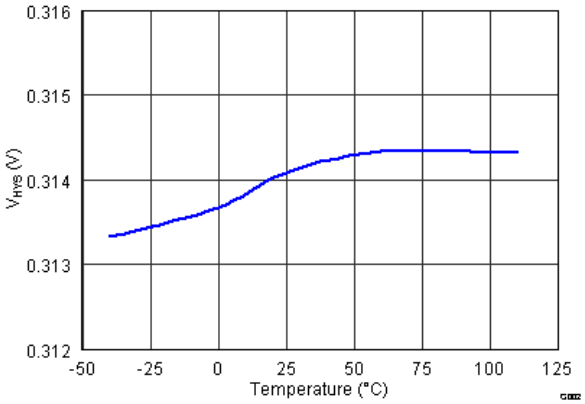

Figure 8-5. Hysteresis V_{HYS} vs. Temperature

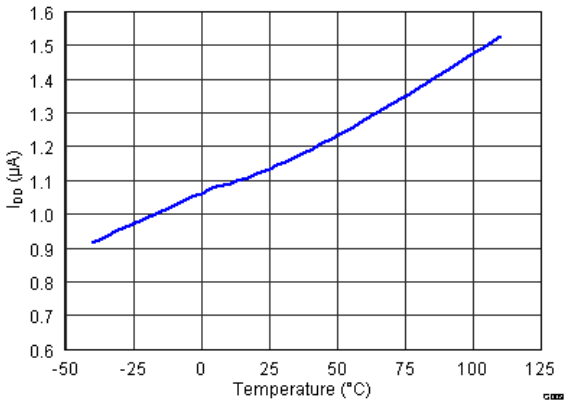

Figure 8-6. I_{DD} Current Consumption vs. Temperature at VDD = 16V

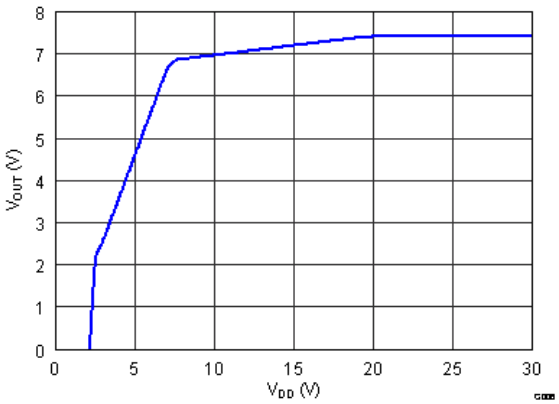

Figure 8-7. V_{OUT} vs. V_{DD}

Copyright © 2026 Texas Instruments Incorporated

8.3 Power Supply Recommendations

The maximum power of this device is 20 V on V_{DD}.

8.4 Layout

8.4.1 Layout Guidelines

1. Ensure the RC filters for the Vx pins and VDD pin are placed as close as possible to the target terminal, reducing the tracing loop area.
2. The capacitor for CD must be placed close to the IC terminals.
3. Ensure the trace connecting the fuse to the gate, source of the NFET to the Pack– is sufficient to withstand the current during fuse blown event.

8.4.2 Layout Example

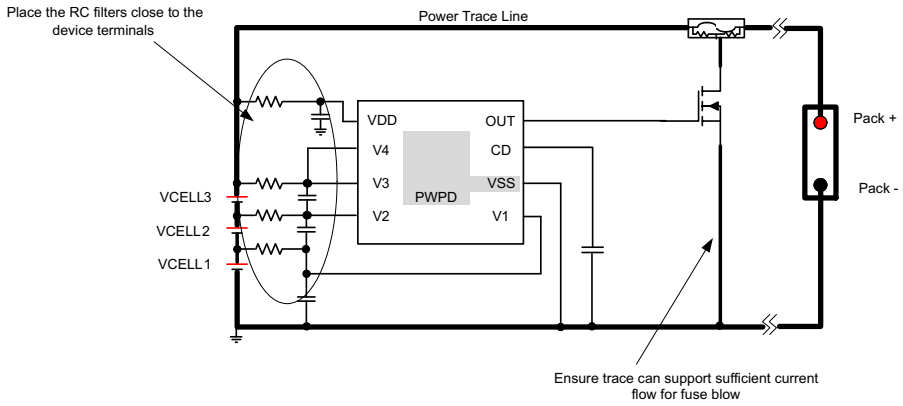

Figure 8-8. Layout Example

Copyright © 2026 Texas Instruments Incorporated

9 Device and Documentation Support

9.1 Device Support

9.1.1 Third-Party Products Disclaimer

TI'S PUBLICATION OF INFORMATION REGARDING THIRD-PARTY PRODUCTS OR SERVICES DOES NOT CONSTITUTE AN ENDORSEMENT REGARDING THE SUITABILITY OF SUCH PRODUCTS OR SERVICES OR A WARRANTY, REPRESENTATION OR ENDORSEMENT OF SUCH PRODUCTS OR SERVICES, EITHER ALONE OR IN COMBINATION WITH ANY TI PRODUCT OR SERVICE.

9.2 Documentation Support

9.2.1 Related Documentation

For related documentation, see *BQ2945xy and BQ2947xy Cascade Voltage Monitoring* application note

9.3 Receiving Notification of Documentation Updates

To receive notification of documentation updates, navigate to the device product folder on ti.com. In the upper right corner, click on *Alert me* to register and receive a weekly digest of any product information that has changed. For change details, review the revision history included in any revised document.

9.4 Support Resources

TI E2E™ support forums are an engineer's go-to source for fast, verified answers and design help — straight from the experts. Search existing answers or ask your own question to get the quick design help you need.

Linked content is provided "AS IS" by the respective contributors. They do not constitute TI specifications and do not necessarily reflect TI's views; see TI's Terms of Use.

9.5 Trademarks

PowerPAD™ and TI E2E™ are trademarks of Texas Instruments.
All trademarks are the property of their respective owners.

9.6 Electrostatic Discharge Caution



This integrated circuit can be damaged by ESD. Texas Instruments recommends that all integrated circuits be handled with appropriate precautions. Failure to observe proper handling and installation procedures can cause damage.

ESD damage can range from subtle performance degradation to complete device failure. Precision integrated circuits may be more susceptible to damage because very small parametric changes could cause the device not to meet its published specifications.

9.7 Glossary

TI Glossary	This glossary lists and explains terms, acronyms, and definitions.

10 Revision History

Changes from Revision J (May 2021) to Revision K (June 2026)	Page
• Added BQ294715 to the *Device Options table*	3
• Added BQ294715 to the *Electrical Characteristics*	6

Changes from Revision I (June 2018) to Revision J (May 2021)	Page
• Updated the BQ294712 and BQ294713 devices in the *Device Options table*	3

Copyright © 2026 Texas Instruments Incorporated

Changes from Revision H (February 2018) to Revision I (June 2018)	Page
• Added BQ294713 to the *Device Options table*	3
• Added BQ294713 to the *Electrical Characteristics*	6

Changes from Revision G (November 2017) to Revision H (February 2018)	Page
• Changed BQ294712 to Production Data in the *Device Options table*	3

11 Mechanical, Packaging, and Orderable Information

The following pages include mechanical, packaging, and orderable information. This information is the most current data available for the designated devices. This data is subject to change without notice and revision of this document. For browser-based versions of this data sheet, refer to the left-hand navigation.

Copyright © 2026 Texas Instruments Incorporated

PACKAGING INFORMATION

Orderable part number	Status (1)	Material type (2)	Package | Pins	Package qty | Carrier	RoHS (3)	Lead finish/ Ball material (4)	MSL rating/ Peak reflow (5)	Op temp (°C)	Part marking (6)
BQ294700DSGR	Active	Production	WSON (DSG) | 8	3000 | LARGE T&R	Yes	NIPDAU	Level-1-260C-UNLIM	-40 to 85	700
BQ294700DSGR.A	Active	Production	WSON (DSG) | 8	3000 | LARGE T&R	Yes	NIPDAU	Level-1-260C-UNLIM	-40 to 85	700
BQ294700DSGRG4	Active	Production	WSON (DSG) | 8	3000 | LARGE T&R	Yes	NIPDAU	Level-1-260C-UNLIM	-40 to 110	700
BQ294700DSGRG4.A	Active	Production	WSON (DSG) | 8	3000 | LARGE T&R	Yes	NIPDAU	Level-1-260C-UNLIM	-40 to 110	700
BQ294700DSGT	Active	Production	WSON (DSG) | 8	250 | SMALL T&R	Yes	NIPDAU | SN	Level-1-260C-UNLIM	-40 to 85	700
BQ294700DSGT.A	Active	Production	WSON (DSG) | 8	250 | SMALL T&R	Yes	NIPDAU	Level-1-260C-UNLIM	-40 to 85	700
BQ294701DSGR	Active	Production	WSON (DSG) | 8	3000 | LARGE T&R	Yes	NIPDAU | SN	Level-1-260C-UNLIM	-40 to 85	701
BQ294701DSGR.A	Active	Production	WSON (DSG) | 8	3000 | LARGE T&R	Yes	NIPDAU	Level-1-260C-UNLIM	-40 to 85	701
BQ294701DSGT	Active	Production	WSON (DSG) | 8	250 | SMALL T&R	Yes	NIPDAU | SN	Level-1-260C-UNLIM	-40 to 85	701
BQ294701DSGT.A	Active	Production	WSON (DSG) | 8	250 | SMALL T&R	Yes	NIPDAU	Level-1-260C-UNLIM	-40 to 85	701
BQ294702DSGR	Active	Production	WSON (DSG) | 8	3000 | LARGE T&R	Yes	NIPDAU | SN	Level-1-260C-UNLIM	-40 to 85	702
BQ294702DSGR.A	Active	Production	WSON (DSG) | 8	3000 | LARGE T&R	Yes	NIPDAU	Level-1-260C-UNLIM	-40 to 85	702
BQ294702DSGT	Active	Production	WSON (DSG) | 8	250 | SMALL T&R	Yes	NIPDAU | SN	Level-1-260C-UNLIM	-40 to 85	702
BQ294702DSGT.A	Active	Production	WSON (DSG) | 8	250 | SMALL T&R	Yes	NIPDAU	Level-1-260C-UNLIM	-40 to 85	702
BQ294703DSGR	Active	Production	WSON (DSG) | 8	3000 | LARGE T&R	Yes	NIPDAU	Level-1-260C-UNLIM	-40 to 85	703
BQ294703DSGR.A	Active	Production	WSON (DSG) | 8	3000 | LARGE T&R	Yes	NIPDAU	Level-1-260C-UNLIM	-40 to 85	703
BQ294703DSGRG4	Active	Production	WSON (DSG) | 8	3000 | LARGE T&R	Yes	NIPDAU	Level-1-260C-UNLIM	-40 to 110	703
BQ294703DSGRG4.A	Active	Production	WSON (DSG) | 8	3000 | LARGE T&R	Yes	NIPDAU	Level-1-260C-UNLIM	-40 to 110	703
BQ294703DSGT	Active	Production	WSON (DSG) | 8	250 | SMALL T&R	Yes	NIPDAU	Level-1-260C-UNLIM	-40 to 85	703
BQ294703DSGT.A	Active	Production	WSON (DSG) | 8	250 | SMALL T&R	Yes	NIPDAU	Level-1-260C-UNLIM	-40 to 85	703
BQ294704DSGR	Active	Production	WSON (DSG) | 8	3000 | LARGE T&R	Yes	NIPDAU | SN	Level-1-260C-UNLIM	-40 to 85	704
BQ294704DSGR.A	Active	Production	WSON (DSG) | 8	3000 | LARGE T&R	Yes	NIPDAU	Level-1-260C-UNLIM	-40 to 85	704
BQ294704DSGT	Active	Production	WSON (DSG) | 8	250 | SMALL T&R	Yes	NIPDAU | SN	Level-1-260C-UNLIM	-40 to 85	704
BQ294704DSGT.A	Active	Production	WSON (DSG) | 8	250 | SMALL T&R	Yes	NIPDAU	Level-1-260C-UNLIM	-40 to 85	704
BQ294705DSGR	Active	Production	WSON (DSG) | 8	3000 | LARGE T&R	Yes	NIPDAU	Level-1-260C-UNLIM	-40 to 85	705
BQ294705DSGR.A	Active	Production	WSON (DSG) | 8	3000 | LARGE T&R	Yes	NIPDAU	Level-1-260C-UNLIM	-40 to 85	705
BQ294705DSGRG4	Active	Production	WSON (DSG) | 8	3000 | LARGE T&R	Yes	NIPDAU	Level-1-260C-UNLIM	-40 to 110	705
BQ294705DSGRG4.A	Active	Production	WSON (DSG) | 8	3000 | LARGE T&R	Yes	NIPDAU	Level-1-260C-UNLIM	-40 to 110	705
BQ294705DSGT	Active	Production	WSON (DSG) | 8	250 | SMALL T&R	Yes	NIPDAU | SN	Level-1-260C-UNLIM	-40 to 85	705

Orderable part number	Status (1)	Material type (2)	Package | Pins	Package qty | Carrier	RoHS (3)	Lead finish/ Ball material (4)	MSL rating/ Peak reflow (5)	Op temp (°C)	Part marking (6)
BQ294705DSGT.A	Active	Production	WSON (DSG) | 8	250 | SMALL T&R	Yes	NIPDAU	Level-1-260C-UNLIM	-40 to 85	705
BQ294706DSGR	Active	Production	WSON (DSG) | 8	3000 | LARGE T&R	Yes	NIPDAU	Level-1-260C-UNLIM	-40 to 85	706
BQ294706DSGR.A	Active	Production	WSON (DSG) | 8	3000 | LARGE T&R	Yes	NIPDAU	Level-1-260C-UNLIM	-40 to 85	706
BQ294706DSGT	Active	Production	WSON (DSG) | 8	250 | SMALL T&R	Yes	NIPDAU	Level-1-260C-UNLIM	-40 to 85	706
BQ294706DSGT.A	Active	Production	WSON (DSG) | 8	250 | SMALL T&R	Yes	NIPDAU	Level-1-260C-UNLIM	-40 to 85	706
BQ294707DSGR	Active	Production	WSON (DSG) | 8	3000 | LARGE T&R	Yes	NIPDAU	Level-1-260C-UNLIM	-40 to 85	707
BQ294707DSGR.A	Active	Production	WSON (DSG) | 8	3000 | LARGE T&R	Yes	NIPDAU	Level-1-260C-UNLIM	-40 to 85	707
BQ294707DSGT	Active	Production	WSON (DSG) | 8	250 | SMALL T&R	Yes	NIPDAU	Level-1-260C-UNLIM	-40 to 85	707
BQ294707DSGT.A	Active	Production	WSON (DSG) | 8	250 | SMALL T&R	Yes	NIPDAU	Level-1-260C-UNLIM	-40 to 85	707
BQ294708DSGR	Active	Production	WSON (DSG) | 8	3000 | LARGE T&R	Yes	Call TI | Nipdau	Level-2-260C-1 YEAR	-40 to 85	708
BQ294708DSGR.A	Active	Production	WSON (DSG) | 8	3000 | LARGE T&R	Yes	NIPDAU	Level-2-260C-1 YEAR	-40 to 85	708
BQ294708DSGT	Active	Production	WSON (DSG) | 8	250 | SMALL T&R	Yes	Call TI | Nipdau	Level-2-260C-1 YEAR	-40 to 85	708
BQ294708DSGT.A	Active	Production	WSON (DSG) | 8	250 | SMALL T&R	Yes	NIPDAU	Level-2-260C-1 YEAR	-40 to 85	708
BQ294711DSGR	Active	Production	WSON (DSG) | 8	3000 | LARGE T&R	Yes	NIPDAU	Level-1-260C-UNLIM	-40 to 85	711
BQ294711DSGR.A	Active	Production	WSON (DSG) | 8	3000 | LARGE T&R	Yes	NIPDAU	Level-1-260C-UNLIM	-40 to 85	711
BQ294711DSGT	Active	Production	WSON (DSG) | 8	250 | SMALL T&R	Yes	NIPDAU | SN	Level-1-260C-UNLIM	-40 to 85	711
BQ294711DSGT.A	Active	Production	WSON (DSG) | 8	250 | SMALL T&R	Yes	NIPDAU	Level-1-260C-UNLIM	-40 to 85	711
BQ294712DSGR	Active	Production	WSON (DSG) | 8	3000 | LARGE T&R	Yes	NIPDAU | SN	Level-1-260C-UNLIM	-40 to 110	712
BQ294712DSGR.A	Active	Production	WSON (DSG) | 8	3000 | LARGE T&R	Yes	NIPDAU	Level-1-260C-UNLIM	-40 to 110	712
BQ294712DSGT	Active	Production	WSON (DSG) | 8	250 | SMALL T&R	Yes	NIPDAU | SN	Level-1-260C-UNLIM	-40 to 110	712
BQ294712DSGT.A	Active	Production	WSON (DSG) | 8	250 | SMALL T&R	Yes	NIPDAU	Level-1-260C-UNLIM	-40 to 110	712
BQ294713DSGR	Active	Production	WSON (DSG) | 8	3000 | LARGE T&R	Yes	NIPDAU	Level-1-260C-UNLIM	-40 to 110	713
BQ294713DSGR.A	Active	Production	WSON (DSG) | 8	3000 | LARGE T&R	Yes	NIPDAU	Level-1-260C-UNLIM	-40 to 110	713
BQ294713DSGT	Active	Production	WSON (DSG) | 8	250 | SMALL T&R	Yes	NIPDAU | SN	Level-1-260C-UNLIM	-40 to 110	713
BQ294713DSGT.A	Active	Production	WSON (DSG) | 8	250 | SMALL T&R	Yes	NIPDAU	Level-1-260C-UNLIM	-40 to 110	713
BQ294715DSGR	Active	Production	WSON (DSG) | 8	3000 | LARGE T&R	Yes	NIPDAU	Level-1-260C-UNLIM	-40 to 110	715

(1) **Status:** For more details on status, see our product life cycle.

(2) **Material type:** When designated, preproduction parts are prototypes/experimental devices, and are not yet approved or released for full production. Testing and final process, including without limitation quality assurance, reliability performance testing, and/or process qualification, may not yet be complete, and this item is subject to further changes or possible discontinuation. If available for ordering, purchases will be subject to an additional waiver at checkout, and are intended for early internal evaluation purposes only. These items are sold without warranties of any kind.

(3) **RoHS values:** Yes, No, RoHS Exempt. See the TI RoHS Statement for additional information and value definition.

(4) **Lead finish/Ball material:** Parts may have multiple material finish options. Finish options are separated by a vertical ruled line. Lead finish/Ball material values may wrap to two lines if the finish value exceeds the maximum column width.

(5) **MSL rating/Peak reflow:** The moisture sensitivity level ratings and peak solder (reflow) temperatures. In the event that a part has multiple moisture sensitivity ratings, only the lowest level per JEDEC standards is shown. Refer to the shipping label for the actual reflow temperature that will be used to mount the part to the printed circuit board.

(6) **Part marking:** There may be an additional marking, which relates to the logo, the lot trace code information, or the environmental category of the part.

Multiple part markings will be inside parentheses. Only one part marking contained in parentheses and separated by a "~" will appear on a part. If a line is indented then it is a continuation of the previous line and the two combined represent the entire part marking for that device.

Important Information and Disclaimer: The information provided on this page represents TI's knowledge and belief as of the date that it is provided. TI bases its knowledge and belief on information provided by third parties, and makes no representation or warranty as to the accuracy of such information. Efforts are underway to better integrate information from third parties. TI has taken and continues to take reasonable steps to provide representative and accurate information but may not have conducted destructive testing or chemical analysis on incoming materials and chemicals. TI and TI suppliers consider certain information to be proprietary, and thus CAS numbers and other limited information may not be available for release.

In no event shall TI's liability arising out of such information exceed the total purchase price of the TI part(s) at issue in this document sold by TI to Customer on an annual basis.

TAPE AND REEL INFORMATION

REEL DIMENSIONS

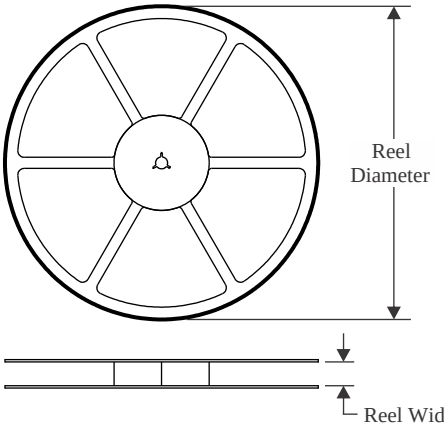

TAPE DIMENSIONS

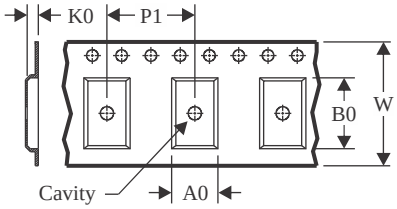

A0	Dimension designed to accommodate the component width
B0	Dimension designed to accommodate the component length
K0	Dimension designed to accommodate the component thickness
W	Overall width of the carrier tape
P1	Pitch between successive cavity centers

QUADRANT ASSIGNMENTS FOR PIN 1 ORIENTATION IN TAPE

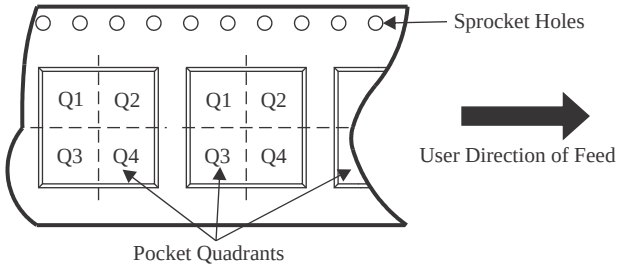

*All dimensions are nominal

Device	Package Type	Package Drawing	Pins	SPQ	Reel Diameter (mm)	Reel Width W1 (mm)	A0 (mm)	B0 (mm)	K0 (mm)	P1 (mm)	W (mm)	Pin1 Quadrant
BQ294700DSGR	WSON	DSG	8	3000	180.0	8.4	2.3	2.3	1.15	4.0	8.0	Q2
BQ294700DSGR	WSON	DSG	8	3000	180.0	8.4	2.3	2.3	1.15	4.0	8.0	Q2
BQ294700DSGRG4	WSON	DSG	8	3000	180.0	8.4	2.3	2.3	1.15	4.0	8.0	Q2
BQ294700DSGT	WSON	DSG	8	250	180.0	8.4	2.3	2.3	1.15	4.0	8.0	Q2
BQ294701DSGR	WSON	DSG	8	3000	180.0	8.4	2.3	2.3	1.15	4.0	8.0	Q2
BQ294701DSGT	WSON	DSG	8	250	180.0	8.4	2.3	2.3	1.15	4.0	8.0	Q2
BQ294702DSGR	WSON	DSG	8	3000	180.0	8.4	2.3	2.3	1.15	4.0	8.0	Q2
BQ294702DSGR	WSON	DSG	8	3000	180.0	8.4	2.3	2.3	1.15	4.0	8.0	Q2
BQ294702DSGT	WSON	DSG	8	250	180.0	8.4	2.3	2.3	1.15	4.0	8.0	Q2
BQ294703DSGR	WSON	DSG	8	3000	180.0	8.4	2.3	2.3	1.15	4.0	8.0	Q2
BQ294703DSGRG4	WSON	DSG	8	3000	180.0	8.4	2.3	2.3	1.15	4.0	8.0	Q2
BQ294703DSGT	WSON	DSG	8	250	180.0	8.4	2.3	2.3	1.15	4.0	8.0	Q2
BQ294704DSGR	WSON	DSG	8	3000	180.0	8.4	2.3	2.3	1.15	4.0	8.0	Q2
BQ294704DSGT	WSON	DSG	8	250	180.0	8.4	2.3	2.3	1.15	4.0	8.0	Q2
BQ294705DSGR	WSON	DSG	8	3000	180.0	8.4	2.3	2.3	1.15	4.0	8.0	Q2
BQ294705DSGR	WSON	DSG	8	3000	180.0	8.4	2.3	2.3	1.15	4.0	8.0	Q2

Device	Package Type	Package Drawing	Pins	SPQ	Reel Diameter (mm)	Reel Width W1 (mm)	A0 (mm)	B0 (mm)	K0 (mm)	P1 (mm)	W (mm)	Pin1 Quadrant
BQ294705DSGRG4	WSON	DSG	8	3000	180.0	8.4	2.3	2.3	1.15	4.0	8.0	Q2
BQ294705DSGT	WSON	DSG	8	250	180.0	8.4	2.3	2.3	1.15	4.0	8.0	Q2
BQ294706DSGR	WSON	DSG	8	3000	180.0	8.4	2.3	2.3	1.15	4.0	8.0	Q2
BQ294706DSGT	WSON	DSG	8	250	180.0	8.4	2.3	2.3	1.15	4.0	8.0	Q2
BQ294707DSGR	WSON	DSG	8	3000	180.0	8.4	2.3	2.3	1.15	4.0	8.0	Q2
BQ294707DSGT	WSON	DSG	8	250	180.0	8.4	2.3	2.3	1.15	4.0	8.0	Q2
BQ294708DSGR	WSON	DSG	8	3000	180.0	8.4	2.3	2.3	1.15	4.0	8.0	Q2
BQ294708DSGT	WSON	DSG	8	250	180.0	8.4	2.3	2.3	1.15	4.0	8.0	Q2
BQ294711DSGR	WSON	DSG	8	3000	180.0	8.4	2.3	2.3	1.15	4.0	8.0	Q2
BQ294711DSGR	WSON	DSG	8	3000	180.0	8.4	2.3	2.3	1.15	4.0	8.0	Q2
BQ294711DSGT	WSON	DSG	8	250	180.0	8.4	2.3	2.3	1.15	4.0	8.0	Q2
BQ294712DSGR	WSON	DSG	8	3000	180.0	8.4	2.3	2.3	1.15	4.0	8.0	Q2
BQ294712DSGT	WSON	DSG	8	250	180.0	8.4	2.3	2.3	1.15	4.0	8.0	Q2
BQ294713DSGR	WSON	DSG	8	3000	180.0	8.4	2.3	2.3	1.15	4.0	8.0	Q2
BQ294713DSGT	WSON	DSG	8	250	180.0	8.4	2.3	2.3	1.15	4.0	8.0	Q2
BQ294715DSGR	WSON	DSG	8	3000	180.0	8.4	2.3	2.3	1.15	4.0	8.0	Q2

TAPE AND REEL BOX DIMENSIONS

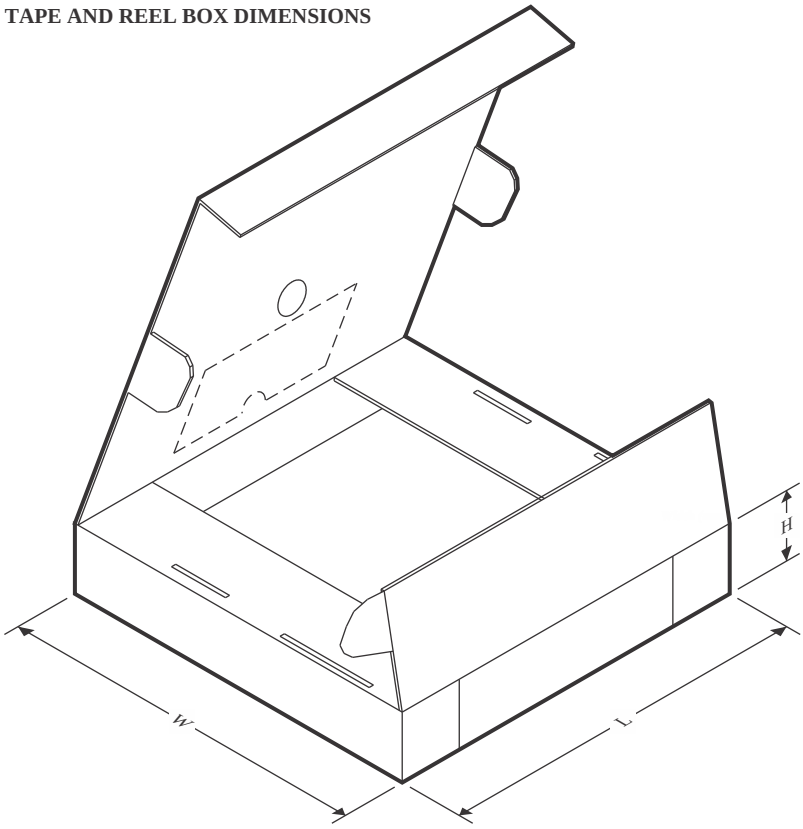

*All dimensions are nominal

Device	Package Type	Package Drawing	Pins	SPQ	Length (mm)	Width (mm)	Height (mm)
BQ294700DSGR	WSON	DSG	8	3000	182.0	182.0	20.0
BQ294700DSGR	WSON	DSG	8	3000	210.0	185.0	35.0
BQ294700DSGRG4	WSON	DSG	8	3000	182.0	182.0	20.0
BQ294700DSGT	WSON	DSG	8	250	182.0	182.0	20.0
BQ294701DSGR	WSON	DSG	8	3000	182.0	182.0	20.0
BQ294701DSGT	WSON	DSG	8	250	182.0	182.0	20.0
BQ294702DSGR	WSON	DSG	8	3000	182.0	182.0	20.0
BQ294702DSGR	WSON	DSG	8	3000	210.0	185.0	35.0
BQ294702DSGT	WSON	DSG	8	250	182.0	182.0	20.0
BQ294703DSGR	WSON	DSG	8	3000	182.0	182.0	20.0
BQ294703DSGRG4	WSON	DSG	8	3000	182.0	182.0	20.0
BQ294703DSGT	WSON	DSG	8	250	182.0	182.0	20.0
BQ294704DSGR	WSON	DSG	8	3000	182.0	182.0	20.0
BQ294704DSGT	WSON	DSG	8	250	182.0	182.0	20.0
BQ294705DSGR	WSON	DSG	8	3000	210.0	185.0	35.0
BQ294705DSGR	WSON	DSG	8	3000	182.0	182.0	20.0
BQ294705DSGRG4	WSON	DSG	8	3000	182.0	182.0	20.0
BQ294705DSGT	WSON	DSG	8	250	182.0	182.0	20.0

Device	Package Type	Package Drawing	Pins	SPQ	Length (mm)	Width (mm)	Height (mm)
BQ294706DSGR	WSON	DSG	8	3000	182.0	182.0	20.0
BQ294706DSGT	WSON	DSG	8	250	182.0	182.0	20.0
BQ294707DSGR	WSON	DSG	8	3000	182.0	182.0	20.0
BQ294707DSGT	WSON	DSG	8	250	182.0	182.0	20.0
BQ294708DSGR	WSON	DSG	8	3000	210.0	185.0	35.0
BQ294708DSGT	WSON	DSG	8	250	210.0	185.0	35.0
BQ294711DSGR	WSON	DSG	8	3000	182.0	182.0	20.0
BQ294711DSGR	WSON	DSG	8	3000	210.0	185.0	35.0
BQ294711DSGT	WSON	DSG	8	250	182.0	182.0	20.0
BQ294712DSGR	WSON	DSG	8	3000	210.0	185.0	35.0
BQ294712DSGT	WSON	DSG	8	250	210.0	185.0	35.0
BQ294713DSGR	WSON	DSG	8	3000	182.0	182.0	20.0
BQ294713DSGT	WSON	DSG	8	250	182.0	182.0	20.0
BQ294715DSGR	WSON	DSG	8	3000	182.0	182.0	20.0

GENERIC PACKAGE VIEW

DSG 8

WSON - 0.8 mm max height

2 x 2, 0.5 mm pitch

PLASTIC SMALL OUTLINE - NO LEAD

This image is a representation of the package family, actual package may vary.
Refer to the product data sheet for package details.

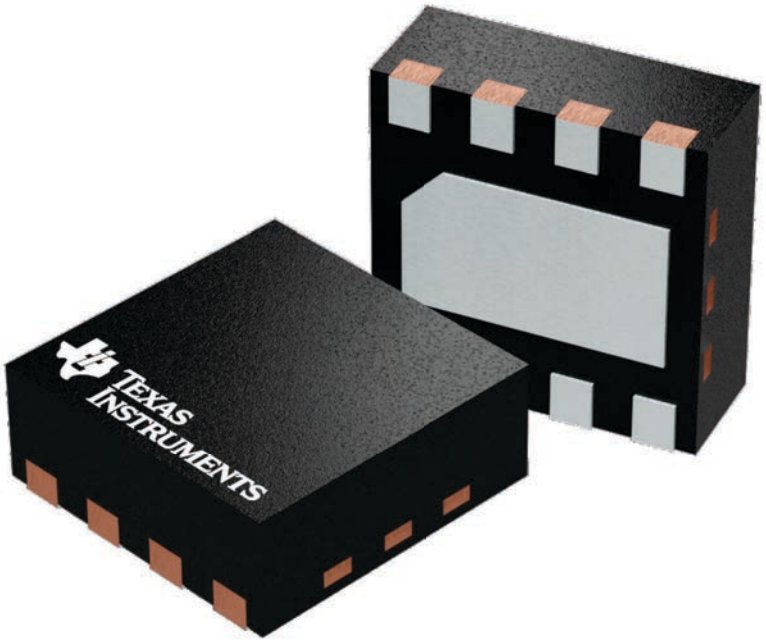

4224783/A

PACKAGE OUTLINE

DSG0008A

WSON - 0.8 mm max height

PLASTIC SMALL OUTLINE - NO LEAD

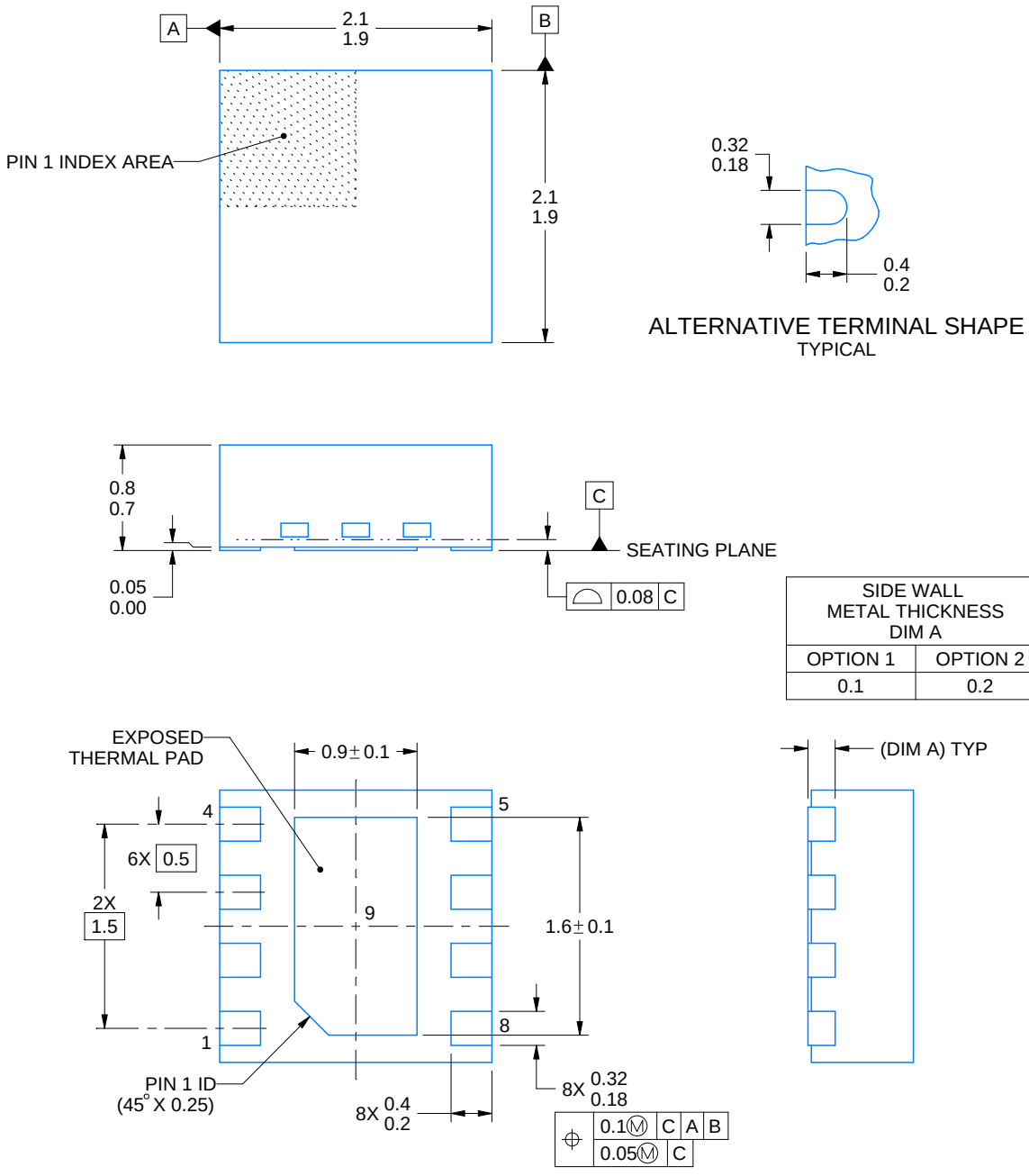

4218900/E 08/2022

NOTES:

1. All linear dimensions are in millimeters. Any dimensions in parenthesis are for reference only. Dimensioning and tolerancing per ASME Y14.5M.
2. This drawing is subject to change without notice.
3. The package thermal pad must be soldered to the printed circuit board for thermal and mechanical performance.

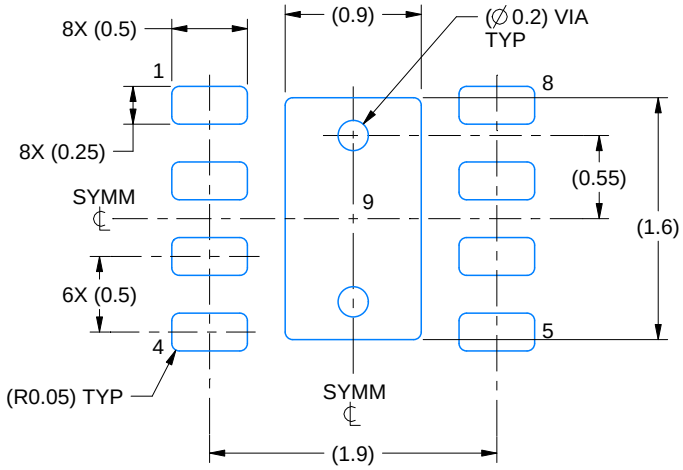

LAND PATTERN EXAMPLE
SCALE:20X

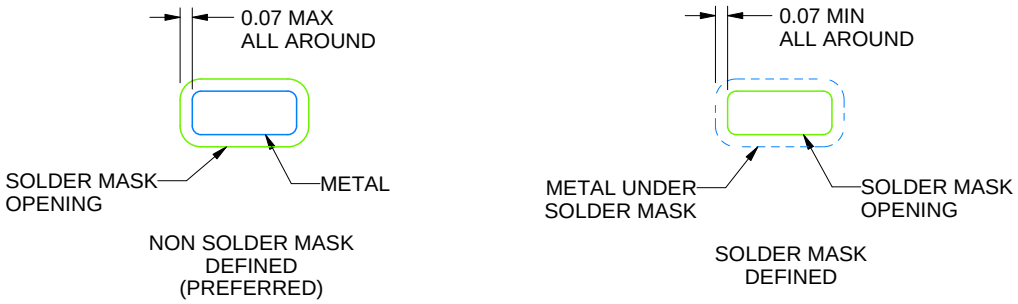

SOLDER MASK DETAILS

4218900/E 08/2022

NOTES: (continued)

4. This package is designed to be soldered to a thermal pad on the board. For more information, see Texas Instruments literature number SLUA271 (www.ti.com/lit/slua271).
5. Vias are optional depending on application, refer to device data sheet. If any vias are implemented, refer to their locations shown on this view. It is recommended that vias under paste be filled, plugged or tented.

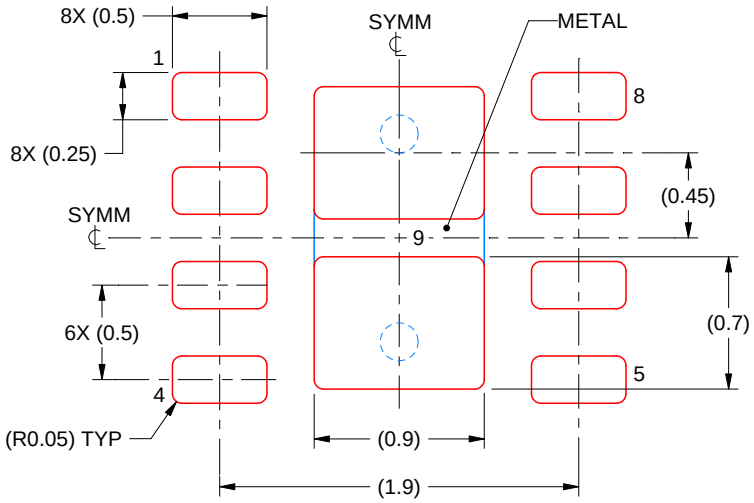

SOLDER PASTE EXAMPLE
BASED ON 0.125 mm THICK STENCIL

EXPOSED PAD 9:
87% PRINTED SOLDER COVERAGE BY AREA UNDER PACKAGE
SCALE:25X

4218900/E 08/2022

NOTES: (continued)

6. Laser cutting apertures with trapezoidal walls and rounded corners may offer better paste release. IPC-7525 may have alternate design recommendations.

IMPORTANT NOTICE AND DISCLAIMER

TI PROVIDES TECHNICAL AND RELIABILITY DATA (INCLUDING DATASHEETS), DESIGN RESOURCES (INCLUDING REFERENCE DESIGNS), APPLICATION OR OTHER DESIGN ADVICE, WEB TOOLS, SAFETY INFORMATION, AND OTHER RESOURCES “AS IS” AND WITH ALL FAULTS, AND DISCLAIMS ALL WARRANTIES, EXPRESS AND IMPLIED, INCLUDING WITHOUT LIMITATION ANY IMPLIED WARRANTIES OF MERCHANTABILITY, FITNESS FOR A PARTICULAR PURPOSE OR NON-INFRINGEMENT OF THIRD PARTY INTELLECTUAL PROPERTY RIGHTS.

These resources are intended for skilled developers designing with TI products. You are solely responsible for (1) selecting the appropriate TI products for your application, (2) designing, validating and testing your application, and (3) ensuring your application meets applicable standards, and any other safety, security, regulatory or other requirements.

These resources are subject to change without notice. TI grants you permission to use these resources only for development of an application that uses the TI products described in the resource. Other reproduction and display of these resources is prohibited. No license is granted to any other TI intellectual property right or to any third party intellectual property right. TI disclaims responsibility for, and you fully indemnify TI and its representatives against any claims, damages, costs, losses, and liabilities arising out of your use of these resources.

TI’s products are provided subject to TI’s Terms of Sale, TI’s General Quality Guidelines, or other applicable terms available either on ti.com or provided in conjunction with such TI products. TI’s provision of these resources does not expand or otherwise alter TI’s applicable warranties or warranty disclaimers for TI products. Unless TI explicitly designates a product as custom or customer-specified, TI products are standard, catalog, general purpose devices.

TI objects to and rejects any additional or different terms you may propose.

Copyright © 2026, Texas Instruments Incorporated

Last updated 10/2025

ENTEGRECİ

Bu belge www.entegreci.com üzerinden sunulmaktadır.

Elektronik komponent tedarikinde Entegreci

Entegreci, Eskişehir merkezli, Türkiye geneline satış yapan bir elektronik komponent mağazasıdır. Entegreler (IC), mikrodenetleyiciler, transistörler, diyotlar, pasif elemanlar, konnektörler, modüller ve geliştirme kartları tek adetten seri üretim adetlerine kadar satılır. Ürün sayfalarında güncel stok durumunu, fiyatı ve datasheet bağlantısını bulabilirsiniz.

Parça koduyla arama

Üretici parça numarasını yazın; stok ve fiyatı hemen görün.

www.entegreci.com

Ürün kategorileri

Entegreden kapasitöre tüm elektronik komponent kategorileri.

Kategorilere göz atın

Üreticiler

Aradığınız üreticinin ürünlerini tek sayfada inceleyin.

Üreticileri görün

Toplu alım ve teklif

Listede olmayan ya da yüksek adetli parçalar için teklif isteyin.

Teklif isteyin

www.entegreci.com | **destek@entegreci.com** | **0850 305 90 34**

Entegreci is an online electronic components store based in Türkiye. Search by manufacturer part number to see stock, prices and datasheets for integrated circuits, microcontrollers, transistors, passive components and connectors, or request a quote for parts that are not listed.

Bu sayfa Entegreci tarafından eklenmiştir. Belgenin önceki sayfaları asıl yayıncısına aittir ve içeriği değiştirilmemiştir; en güncel sürüm için belgenin yayıncısına başvurun.