BQ28Z620 Impedance Track™ Gas Gauge and Protection Solution for 1-Series to 2-Series Cell Li-Ion Battery Packs

1 Features

- Autonomous battery charging control, using a dedicated MASTER mode I²C interface
- 400-kHz I²C bus communications interface, including a 1.2-V logic level for high-speed programming and data access
- Cell balancing with an internal bypass to optimize battery health
- A high-side protection N-CH FET drive enables serial bus communication during fault conditions
- Programmable protection levels for voltage, current, and temperature
- Analog front-end with two independent ADCs
  - Support for simultaneous current and voltage sampling
  - High-accuracy coulomb counter with input offset error < 1 µV (typical)
- Supports down to 0.5-mΩ current sense resistor while capable of 1-mA current measurement
- SHA-1 authentication responder for increased battery pack security
- Compact 12-pin VSON package (DRZ)

2 Applications

- Tablet computing
- Portable and wearable health devices
- Portable audio devices
  - Wireless (bluetooth) speakers

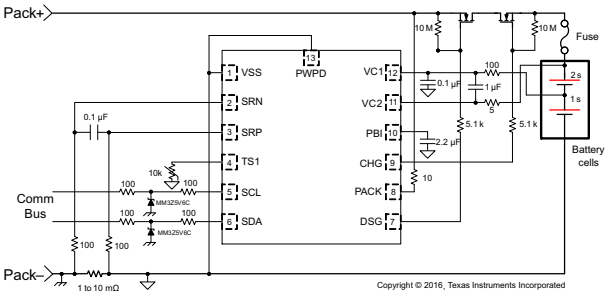

Simplified Schematic

3 Description

The Texas Instruments BQ28Z620 device is a highly integrated, accurate, 1-series to 2-series cell gas gauge and protection solution, enabling autonomous charger control and cell balancing.

The BQ28Z620 device enables autonomous charge control through Master Mode I²C broadcasts of charging current and voltage information, eliminating software overhead that is typically incurred by the system's host controller.

The BQ28Z620 device provides a fully integrated pack-based solution with a flash programmable custom reduced instruction-set CPU (RISC), safety protection, and authentication for 1- to 2-series cell Li-ion and Li-polymer battery packs.

The BQ28Z620 gas gauge communicates via an I²C compatible interface and combines an ultra-low-power, high-speed TI BQBMP processor, high-accuracy analog measurement capabilities, integrated flash memory, an array of peripheral and communication ports, an N-CH FET drive, and a SHA-1 Authentication transform responder into a complete, high-performance battery management solution.

Device Information

PART NUMBER(1)	PACKAGE	BODY SIZE (NOM)
BQ28Z620	VSON (12)	4 mm × 2.5 mm

(1) For all available packages, see the orderable addendum at the end of the data sheet.

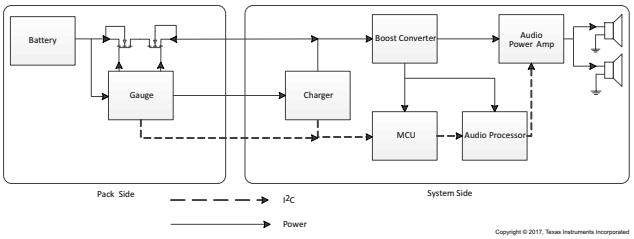

Wireless (Bluetooth) Speaker Application Block Diagram

An IMPORTANT NOTICE at the end of this data sheet addresses availability, warranty, changes, use in safety-critical applications, intellectual property matters and other important disclaimers. PRODUCTION DATA.

Table of Contents

1 Features....1
2 Applications....1
3 Description....1
4 Revision History....2
5 Description (continued)....3
6 BQ28Z620 Changes from BQ28Z610-R1....3
7 Pin Configuration and Functions....4
8 Specifications....5
8.1 Absolute Maximum Ratings....5
8.2 ESD Ratings....5
8.3 Recommended Operating Conditions....5
8.4 Thermal Information....6
8.5 Supply Current....6
8.6 Power Supply Control....6
8.7 Power-On Reset (POR)....6
8.8 Internal 1.8-V LDO....7
8.9 Current Wake Comparator....7
8.10 Coulomb Counter....7
8.11 ADC Digital Filter....8
8.12 ADC Multiplexer....8
8.13 Cell Balancing Support....8
8.14 Internal Temperature Sensor....9
8.15 NTC Thermistor Measurement Support....9
8.16 High-Frequency Oscillator....9
8.17 Low-Frequency Oscillator....9
8.18 Voltage Reference 1....9
8.19 Voltage Reference 2....10
8.20 Instruction Flash....10
8.21 Data Flash....10
8.22 Current Protection Thresholds....11
8.23 Current Protection Timing....11
8.24 N-CH FET Drive (CHG, DSG)....12
8.25 I^2C Interface I/O....13
8.26 I^2C Interface Timing....13
8.27 Typical Characteristics....15
9 Detailed Description....18
9.1 Overview....18
9.2 Functional Block Diagram....18
9.3 Feature Description....19
9.4 Device Functional Modes....23
10 Applications and Implementation....25
10.1 Application Information....25
10.2 Typical Applications....25
11 Power Supply Recommendations....28
12 Layout....29
12.1 Layout Guidelines....29
12.2 Layout Example....30
13 Device and Documentation Support....31
13.1 Documentation Support....31
13.2 Receiving Notification of Documentation Updates....31
13.3 Support Resources....31
13.4 Trademarks....31
13.5 Electrostatic Discharge Caution....31
13.6 Glossary....31
14 Mechanical, Packaging, and Orderable Information....31

4 Revision History

NOTE: Page numbers for previous revisions may differ from page numbers in the current version.

DATE	REVISION	NOTES
December 2022	*	Initial Release

Copyright © 2022 Texas Instruments Incorporated

5 Description (continued)

The BQ28Z620 device provides an array of battery and system safety functions, including overcurrent in discharge, short circuit in charge, and short circuit in discharge protection for the battery, as well as FET protection for the N-channel FETs, internal AFE watchdog, and cell balancing. Through firmware, the devices can provide a larger array of features including protection against overvoltage, undervoltage, overtemperature, and more.

6 BQ28Z620 Changes from BQ28Z610-R1

Table 6-1. BQ28Z620 Changes from the BQ28Z610-R1 Device

No.	DESCRIPTION	DATA SHEET REFERENCE
1	1.2-V logic level I/O interface	Section 8.25
2	Added the 5.75-V gate drive option to reduce IQ in SLEEP mode. Created a new bit to select between 5.75 V and 9.4 V	Section 8.24, Section 9.3.14, Section 8.5, *BQ28Z620 Technical Reference Manual*
3	Reduced the minimum value of the protection threshold to support RSNS < 1 mΩ	Section 8.22 and *BQ28Z620 Technical Reference Manual* Appendix A
4	Removed the Battery Trip Point (BTP) function to free up data flash and accelerate CPU speed	BTP is not documented in the BQ28Z620 data sheet and TRM.

Copyright © 2022 Texas Instruments Incorporated

7 Pin Configuration and Functions

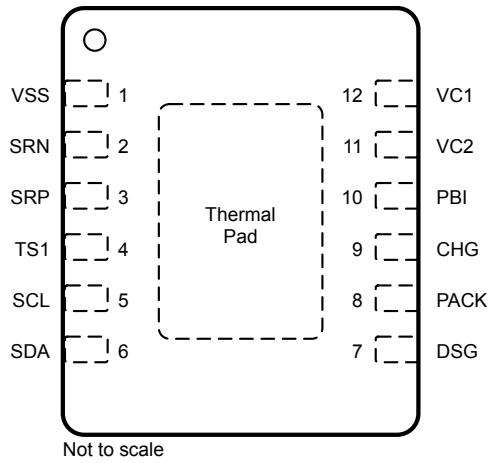

Figure 7-1. DRZ Package 12-Pin VSON Top View

Table 7-1. Pin Functions

PIN NUMBER	PIN NAME	TYPE	DESCRIPTION
1	VSS	P(1)	Device ground
2	SRN	AI	Analog input pin connected to the internal coulomb counter peripheral for integrating a small voltage between SRP and SRN where SRP is the top of the sense resistor.
3	SRP	AI	Analog input pin connected to the internal coulomb counter peripheral for integrating a small voltage between SRP and SRN where SRP is the top of the sense resistor.
4	TS1	AI	Temperature input for ADC to the oversampled ADC channel
5	SCL	I/O	Serial Clock for I^2C interface; requires external pullup when used
6	SDA	I/O	Serial Data for I^2C interface; requires external pullup
7	DSG	O	N-CH FET drive output pin
8	PACK	AI, P	Pack sense input pin
9	CHG	O	N-CH FET drive output pin
10	PBI	P	Power supply backup input pin
11	VC2	AI, P	Sense voltage input pin for most positive cell, balance current input for most positive cell. Primary power supply input and battery stack measurement input (BAT)
12	VC1	AI	Sense voltage input pin for least positive cell, balance current input for least positive cell
	PWPD	—	Exposed Pad, electrically connected to VSS (external trace)

(1) P = Power Connection, O = Digital Output, AI = Analog Input, I = Digital Input, I/O = Digital Input/Output

Copyright © 2022 Texas Instruments Incorporated

8 Specifications

8.1 Absolute Maximum Ratings

Over operating free-air temperature range (unless otherwise noted)(1)

		MIN	MAX	UNIT
Supply voltage range, V_{CC}	VC2, PBI	–0.3	30	V
Input voltage range, V_{IN}	PACK	–0.3	30	V
	TS	–0.3	V_{REG} + 0.3	V
	SRP, SRN	–0.3	0.3	V
	VC2	VC1 – 0.3	VSS + 30	V
	VC1	VSS – 0.3	VSS + 30	V
Communication Interface	SDA, SCL	–0.3	6	V
Output voltage range, V_O	CHG, DSG	–0.3	32	V
Maximum VSS current, I_{SS}			±50	mA
Functional Temperature, T_{FUNC}		–40	110	°C
Lead temperature (soldering, 10 s), T_{SOLDER}			±300	°C
Storage temperature range, T_{STG}		–65	150	°C

(1) Operation outside the Absolute Maximum Ratings may cause permanent device damage. Absolute Maximum Ratings do not imply functional operation of the device at these or any other conditions beyond those listed under Recommended Operating Conditions. If outside the Recommended Operating Conditions but within the Absolute Maximum Ratings, the device may not be fully functional, and this may affect device reliability, functionality, performance, and shorten the device lifetime.

8.2 ESD Ratings

		VALUE	UNIT
$V_{(ESD)}$	Human body model (HBM), per ANSI/ESDA/JEDEC JS-001, all pins(1)	±2000	V
	Charged device model (CDM), per ANSI/ESDA/JEDEC JS-002, all pins(2)	±500	

(1) JEDEC document JEP155 states that 500-V HBM allows safe manufacturing with a standard ESD control process.
(2) JEDEC document JEP157 states that 250-V CDM allows safe manufacturing with a standard ESD control process.

8.3 Recommended Operating Conditions

Typical values stated where T_A = 25°C and VCC = 7.2 V, Min/Max values stated where T_A = –40°C to 85°C and VCC = 2.2 V to 26 V (unless otherwise noted)

PARAMETER		TEST CONDITION	MIN	NOM	MAX	UNIT
V_{CC}	Supply voltage	VC2, PBI	2.2		26	V
$V_{SHUTDOWN–}$	Shutdown voltage	$V_{PACK} < V_{SHUTDOWN\ –}$	1.8	2.0	2.2	V
$V_{SHUTDOWN+}$	Start-up voltage	$V_{PACK} > V_{SHUTDOWN–} + V_{HYS}$	2.05	2.25	2.45	V
V_{HYS}	Shutdown voltage hysteresis	$V_{SHUTDOWN+} – V_{SHUTDOWN–}$		250		mV
V_{IN}	Input voltage range	SDA, SCL			5.5	V
		TS1			V_{REG}	
		SRP, SRN	–0.2		0.2	
		VC2	V_{VC1}		V_{VC1} + 5	
		VC1	V_{VSS}		V_{VSS} + 5	
		PACK			26	
V_O	Output voltage range	CHG, DSG			26	V
C_{PBI}	External PBI capacitor		2.2			µF
T_{OPR}	Operating temperature		–40		85	°C

Copyright © 2022 Texas Instruments Incorporated

8.4 Thermal Information

THERMAL METRIC(1)		BQ28Z620 DRZ 12 PINS	UNIT
$R_{\theta JA, High K}$	Junction-to-ambient thermal resistance	51.7	°C/W
$R_{\theta JC(top)}$	Junction-to-case(top) thermal resistance	44.7	
$R_{\theta JB}$	Junction-to-board thermal resistance	22.8	
ψ_{JT}	Junction-to-top characterization parameter	2.1	
ψ_{JB}	Junction-to-board characterization parameter	22.8	
$R_{\theta JC(bottom)}$	Junction-to-case(bottom) thermal resistance	4.0	

(1) For more information about traditional and new thermal metrics, see the Semiconductor and IC Package Thermal Metrics application report, SPRA953.

8.5 Supply Current

Typical values stated where T_A = 25°C and VCC = 7.2 V, Min/Max values stated where T_A = –40°C to 85°C and VCC = 2.2 V to 10 V (unless otherwise noted)

PARAMETER		TEST CONDITION	MIN	TYP	MAX	UNIT
I_{NORMAL} (1)	NORMAL mode	CHG = ON, DSG = ON, No Flash Write		250		µA
I_{SLEEP} (1)	SLEEP mode	CHG = OFF, DSG = ON, MOSFET gate leakage < 1 µA, no communication on bus		70		µA
		CHG = ON, DSG = ON, MOSFET gate leakage < 1 µA, no communication on bus		80		
$I_{SHUTDOWN}$	SHUTDOWN mode	VCC ≤10 V		0.5	2	µA

(1) Dependent on the use of the correct firmware (FW) configuration

8.6 Power Supply Control

Typical values stated where T_A = 25°C and VCC = 7.2 V, Min/Max values stated where T_A = –40°C to 85°C and VCC = 2.2 V to 10 V (unless otherwise noted)

PARAMETER		TEST CONDITION	MIN	TYP	MAX	UNIT
$V_{SWITCHOVER-}$	VC2 to PACK switchover voltage	$V_{VC2} < V_{SWITCHOVER-}$	2.0	2.1	2.2	V
$V_{SWITCHOVER+}$	PACK to VC2 switchover voltage	$V_{VC2} > V_{SWITCHOVER-} + V_{HYS}$	3.0	3.1	3.2	V
V_{HYS}	Switchover voltage hysteresis	$V_{SWITCHOVER+} – V_{SWITCHOVER-}$		1000		mV
I_{LKG}	Input Leakage current	VC2 pin, VC2 = 0 V, PACK = 25 V			1	µA
		PACK pin, VC2 = 25 V, PACK = 0 V			1	
		VC2 and PACK pins, VC2 = 0 V, PACK = 0 V, PBI = 25 V			1	
$R_{PACK(PD)}$	Internal pulldown resistance	PACK	30	40	50	kΩ

8.7 Power-On Reset (POR)

Typical values stated where T_A = 25°C and VCC = 7.2 V, Min/Max values stated where T_A = –40°C to 85°C and VCC = 2.2 V to 10 V (unless otherwise noted)

PARAMETER		TEST CONDITION	MIN	TYP	MAX	UNIT
V_{REGIT-}	Negative-going voltage input	V_{REG}	1.51	1.55	1.59	V
V_{HYS}	Power-on reset hysteresis	$V_{REGIT+} – V_{REGIT-}$	70	100	130	mV

Copyright © 2022 Texas Instruments Incorporated

8.7 Power-On Reset (POR) (continued)

Typical values stated where T_A = 25°C and VCC = 7.2 V, Min/Max values stated where T_A = –40°C to 85°C and VCC = 2.2 V to 10 V (unless otherwise noted)

PARAMETER		TEST CONDITION	MIN	TYP	MAX	UNIT
t_{RST}	Power-on reset time		200	300	400	µs

8.8 Internal 1.8-V LDO

Typical values stated where T_A = 25°C and VCC = 7.2 V, Min/Max values stated where T_A = –40°C to 85°C and VCC = 2.2 V to 10 V (unless otherwise noted)

PARAMETER		TEST CONDITION	MIN	TYP	MAX	UNIT
V_{REG}	Regulator voltage		1.6	1.8	2.0	V
$\Delta V_{O(TEMP)}$	Regulator output over temperature	$\Delta V_{REG}/\Delta T_A$, I_{REG} = 10 mA		±0.25%		
$\Delta V_{O(LINE)}$	Line regulation	$\Delta V_{REG}/\Delta V_{VC2}$ =2.5 V to 8.4 V	–0 .6%		0.5%	
$\Delta V_{O(LOAD)}$	Load regulation	$\Delta V_{REG}/\Delta I_{REG}$, I_{REG} = 0 mA to 10 mA	–1.5%		1.5%	
I_{REG}	Regulator output current limit	V_{REG} = 0.9 x $V_{REG(NOM)}$, V_{IN} > 2.2 V	20			mA
I_{SC}	Regulator short-circuit current limit		25	40	50	mA
$PSRR_{REG}$	Power supply rejection ratio	$\Delta V_{BAT}/\Delta V_{REG}$, I_{REG} = 10 mA, V_{IN} > 2.5 V, f = 10 Hz		40		dB
V_{SLEW}	Slew rate enhancement voltage threshold	V_{REG}	1.58	1.65		V

8.9 Current Wake Comparator

Typical values stated where T_A = 25°C and VCC = 7.2 V, Min/Max values stated where T_A = –40°C to 85°C and VCC = 2.2 V to 10 V (unless otherwise noted)

PARAMETER		TEST CONDITION	MIN	TYP	MAX	UNIT
V_{WAKE}	Wake voltage threshold	V_{WAKE} = V_{SRP} – V_{SRN} WAKE_CONTROL[WK1, WK0] = 0,0	±0.3	±0.625	±0.9	mV
		V_{WAKE} = V_{SRP} – V_{SRN} WAKE_CONTROL[WK1, WK0] = 0,1	±0.6	±1.25	±1.8	mV
		V_{WAKE} = V_{SRP} – V_{SRN} WAKE_CONTROL[WK1, WK0] = 1,0	±1.2	±2.5	±3.6	mV
		V_{WAKE} = V_{SRP} – V_{SRN} WAKE_CONTROL[WK1, WK0] = 1,1	±2.4	±5.0	±7.2	mV
$V_{WAKE(DRIFT)}$	Temperature drift of V_{WAKE} accuracy			0.5%		°C
t_{WAKE}	Time from application of current to wake			0.25	0.5	ms
$t_{WAKE(SU)}$	Wake up comparator startup time	[WKCHGEN] = 0 and [WKDSGEN] = 0 to [WKCHGEN] = 1 and [WKDSGEN] = 1		250	640	µs

8.10 Coulomb Counter

Typical values stated where T_A = 25°C and VCC = 7.2 V, Min/Max values stated where T_A = –40°C to 85°C and VCC = 2.2 V to 10 V (unless otherwise noted)

PARAMETER	TEST CONDITION	MIN	TYP	MAX	UNIT
Input voltage range		–100		100	mV
Full scale range		$–V_{REF1}/10$		$+V_{REF1}/10$	mV
Differential nonlinearity	16-bit, no missing codes			±1	LSB
Integral nonlinearity	16-bit, best fit over input voltage range		±5.2	±22.3	LSB

Copyright © 2022 Texas Instruments Incorporated

8.10 Coulomb Counter (continued)

Typical values stated where T_A = 25°C and VCC = 7.2 V, Min/Max values stated where T_A = –40°C to 85°C and VCC = 2.2 V to 10 V (unless otherwise noted)

PARAMETER	TEST CONDITION	MIN	TYP	MAX	UNIT
Offset error	16-bit, post-calibration		±1.3	±2.6	LSB
Offset error drift	15-bit + sign, post-calibration		0.04	0.07	LSB/°C
Gain error	15-bit + sign, over input voltage range		±131	±492	LSB
Gain error drift	15-bit + sign, over input voltage range		4.3	9.8	LSB/°C
Effective input resistance		2.5			MΩ

8.11 ADC Digital Filter

Typical values stated where T_A = 25°C and VCC = 7.2 V, Min/Max values stated where T_A = –40°C to 85°C and VCC = 2.2 V to 10 V (unless otherwise noted)

PARAMETER	TEST CONDITION	MIN	TYP	MAX	UNIT
t_{CONV}	ADCTL[SPEED1, SPEED0] = 0, 0		31.25		ms
	ADCTL[SPEED1, SPEED0] = 0, 1		15.63		
	ADCTL[SPEED1, SPEED0] = 1, 0		7.81		
	ADCTL[SPEED1, SPEED0] = 1, 1		1.95		
Resolution	No missing codes, ADCTL[SPEED1, SPEED0] = 0, 0		16		Bits
Effective resolution	With sign, ADCTL[SPEED1, SPEED0] = 0, 0	14	15		Bits
	With sign, ADCTL[SPEED1, SPEED0] = 0, 1	13	14		
	With sign, ADCTL[SPEED1, SPEED0] = 1, 0	11	12		
	With sign, ADCTL[SPEED1, SPEED0] = 1, 1	9	10		

8.12 ADC Multiplexer

Typical values stated where T_A = 25°C and VCC = 7.2 V, Min/Max values stated where T_A = –40°C to 85°C and VCC = 2.2 V to 10 V (unless otherwise noted)

PARAMETER		TEST CONDITION	MIN	TYP	MAX	UNIT
K	Scaling factor	VC1–VSS, VC2–VC1	0.1980	0.2000	0.2020	—
		VC2–VSS, PACK–VSS	0.0485	0.050	0.051	
		V_{REF1}/2	0.490	0.500	0.510	
V_{IN}	Input voltage range	VC2–VSS, PACK–VSS	–0.2		20	V
		ADC reference V_{REF1}	–0.2		0.8 × V_{REF1}	
		ADC reference V_{REG}	–0.2		0.8 × V_{REG}	
I_{LKG}	Input leakage current	VC1, VC2 cell balancing off, cell detach detection off, ADC multiplexer off			1	µA

8.13 Cell Balancing Support

Typical values stated where T_A = 25°C and VCC = 7.2 V, Min/Max values stated where T_A = –40°C to 85°C and VCC = 2.2 V to 10 V (unless otherwise noted)

PARAMETER		TEST CONDITION	MIN	TYP	MAX	UNIT
R_{CB}	Internal cell balance resistance	$R_{DS(ON)}$ for internal FET switch at 2 V < V_{DS} < 4 V			200	Ω

Copyright © 2022 Texas Instruments Incorporated

8.14 Internal Temperature Sensor

Typical values stated where T_A = 25°C and VCC = 7.2 V, Min/Max values stated where T_A = –40°C to 85°C and VCC = 2.2 V to 10 V (unless otherwise noted)

PARAMETER		TEST CONDITION	MIN	TYP	MAX	UNIT
V_{TEMP}	Internal temperature sensor voltage drift	V_{TEMPP}	–1.9	–2.0	–2.1	mV/°C
		$V_{TEMPP} – V_{TEMPN}$ (1)	0.177	0.178	0.179	

(1) Assured by design

8.15 NTC Thermistor Measurement Support

Typical values stated where T_A = 25°C and VCC = 7.2 V, Min/Max values stated where T_A = –40°C to 85°C and VCC = 2.2 V to 10 V (unless otherwise noted)

PARAMETER		TEST CONDITION	MIN	TYP	MAX	UNIT
$R_{NTC(PU)}$	Internal pull-up resistance	TS1	14.4	18	21.6	kΩ
$R_{NTC(DRIFT)}$	Resistance drift over temperature	TS1	–360	–280	–200	PPM/°C

8.16 High-Frequency Oscillator

Typical values stated where T_A = 25°C and VCC = 7.2 V, Min/Max values stated where T_A = –40°C to 85°C and VCC = 2.2 V to 10 V (unless otherwise noted)

PARAMETER		TEST CONDITION	MIN	TYP	MAX	UNIT
f_{HFO}	Operating frequency			16.78		MHz
$f_{HFO(ERR)}$	Frequency error	T_A = –20°C to 70°C, includes frequency drift	–2.5%	±0.25%	2.5%	
		T_A = –40°C to 85°C, includes frequency drift	–3.5%	±0.25%	3.5%	
$t_{HFO(SU)}$	Start-up time	T_A = –20°C to 85°C, Oscillator frequency within +/–3% of nominal, CLKCTL[HFRAMP] = 1			4	ms
		Oscillator frequency within +/–3% of nominal, CLKCTL[HFRAMP] = 0			100	µs

8.17 Low-Frequency Oscillator

Typical values stated where T_A = 25°C and VCC = 7.2 V, Min/Max values stated where T_A = –40°C to 85°C and VCC = 2.2 V to 10 V (unless otherwise noted)

PARAMETER		TEST CONDITION	MIN	TYP	MAX	UNIT
f_{LFO}	Operating frequency			262.144		kHz
$f_{LFO(LP)}$	Operating frequency in low power mode			247		kHz
$f_{LFO(ERR)}$	Frequency error	T_A = –20°C to 70°C, includes frequency drift	–1.5%	±0.25%	1.5%	
		T_A = –40°C to 85°C, includes frequency drift	–2.5%	±0.25%	2.5%	
$f_{LFO(LPERR)}$	Frequency error in low power mode		–5%		5%	
$f_{LFO(FAIL)}$	Failure detection frequency		30	80	100	kHz

8.18 Voltage Reference 1

Typical values stated where T_A = 25°C and VCC = 7.2 V, Min/Max values stated where T_A = –40°C to 85°C and VCC = 2.2 V to 10 V (unless otherwise noted)

PARAMETER		TEST CONDITION	MIN	TYP	MAX	UNIT
V_{REF1}	Internal reference voltage	T_A = 25°C, after trim	1.215	1.220	1.225	V

Copyright © 2022 Texas Instruments Incorporated

8.18 Voltage Reference 1 (continued)

Typical values stated where T_A = 25°C and VCC = 7.2 V, Min/Max values stated where T_A = –40°C to 85°C and VCC = 2.2 V to 10 V (unless otherwise noted)

PARAMETER		TEST CONDITION	MIN	TYP	MAX	UNIT
$V_{REF1(DRIFT)}$	Internal reference voltage drift	T_A = 0°C to 60°C, after trim		±50		PPM/°C
		T_A = –40°C to 85°C, after trim		±80		

8.19 Voltage Reference 2

Typical values stated where T_A = 25°C and VCC = 7.2 V, Min/Max values stated where T_A = –40°C to 85°C and VCC = 2.2 V to 10 V (unless otherwise noted)

PARAMETER		TEST CONDITION	MIN	TYP	MAX	UNIT
V_{REF2}	Internal reference voltage	T_A = 25°C, after trim	1.22	1.225	1.23	V
$V_{REF2(DRIFT)}$	Internal reference voltage drift	T_A = 0°C to 60°C, after trim		±50		PPM/°C
		T_A = –40°C to 85°C, after trim		±80		

8.20 Instruction Flash

Typical values stated where T_A = 25°C and VCC = 7.2 V, Min/Max values stated where T_A = –40°C to 85°C and VCC = 2.2 V to 10 V (unless otherwise noted)

PARAMETER		TEST CONDITION	MIN	TYP	MAX	UNIT
	Data retention		10			Years
	Flash programming write cycles		1000			Cycles
$t_{PROGWORD}$	Word programming time	T_A = –40°C to 85°C			40	µs
$t_{MASSERASE}$	Mass-erase time	T_A = –40°C to 85°C			40	ms
$t_{PAGEERASE}$	Page-erase time	T_A = –40°C to 85°C			40	ms
$I_{FLASHREAD}$	Flash-read current	T_A = –40°C to 85°C			2	mA
$I_{FLASHWRITE}$	Flash-write current	T_A = –40°C to 85°C			5	mA
$I_{FLASHERASE}$	Flash-erase current	T_A = –40°C to 85°C			15	mA

8.21 Data Flash

Typical values stated where T_A = 25°C and VCC = 7.2 V, Min/Max values stated where T_A = –40°C to 85°C and VCC = 2.2 V to 10 V (unless otherwise noted)

PARAMETER		TEST CONDITION	MIN	TYP	MAX	UNIT
	Data retention		10			Years
	Flash programming write cycles		20000			Cycles
$t_{PROGWORD}$	Word programming time	T_A = –40°C to 85°C			40	µs
$t_{MASSERASE}$	Mass-erase time	T_A = –40°C to 85°C			40	ms
$t_{PAGEERASE}$	Page-erase time	T_A = –40°C to 85°C			40	ms
$I_{FLASHREAD}$	Flash-read current	T_A = –40°C to 85°C			1	mA
$I_{FLASHWRITE}$	Flash-write current	T_A = –40°C to 85°C			5	mA
$I_{FLASHERASE}$	Flash-erase current	T_A = –40°C to 85°C			15	mA

Copyright © 2022 Texas Instruments Incorporated

8.22 Current Protection Thresholds

Typical values stated where T_A = 25°C and VCC = 7.2 V, Min/Max values stated where T_A = –40°C to 85°C and VCC = 2.2 V to 10 V (unless otherwise noted)

PARAMETER		TEST CONDITION	MIN	TYP	MAX	UNIT
V_{OCD}	OCD detection threshold voltage range	$V_{OCD} = V_{SRN} – V_{SRP}$, PROTECTION_CONTROL[RSNS] = 1	16.6		100	mV
		$V_{OCD} = V_{SRN} – V_{SRP}$, PROTECTION_CONTROL[RSNS] = 0	4.15		25	
ΔV_{OCD}	OCD detection threshold voltage program step	$V_{OCD} = V_{SRN} – V_{SRP}$, PROTECTION_CONTROL[RSNS] = 1		5.56		mV
		$V_{OCD} = V_{SRN} – V_{SRP}$, PROTECTION_CONTROL[RSNS] = 0		1.39		
ΔV_{SCC}	SCC detection threshold voltage range	$V_{SCC} = V_{SRP} – V_{SRN}$, PROTECTION_CONTROL[RSNS] = 1	44.4		200	mV
		$V_{SCC} = V_{SRP} – V_{SRN}$, PROTECTION_CONTROL[RSNS] = 0	11.1		50	
ΔV_{SCC}	SCC detection threshold voltage program step	$V_{SCC} = V_{SRP} – V_{SRN}$, PROTECTION_CONTROL[RSNS] = 1		22.2		mV
		$V_{SCC} = V_{SRP} – V_{SRN}$, PROTECTION_CONTROL[RSNS] = 0		5.55		
V_{SCD1}	SCD1 detection threshold voltage range	$V_{SCD1} = V_{SRN} – V_{SRP}$, PROTECTION_CONTROL[RSNS] = 1	44.4		200	mV
		$V_{SCD1} = V_{SRN} – V_{SRP}$, PROTECTION_CONTROL[RSNS] = 0	11.1		50	
ΔV_{SCD1}	SCD1 detection threshold voltage program step	$V_{SCD1} = V_{SRN} – V_{SRP}$, PROTECTION_CONTROL[RSNS] = 1		22.2		mV
		$V_{SCD1} = V_{SRN} – V_{SRP}$, PROTECTION_CONTROL[RSNS] = 0		5.55		
V_{SCD2}	SCD2 detection threshold voltage range	$V_{SCD2} = V_{SRN} – V_{SRP}$, PROTECTION_CONTROL[RSNS] = 1	44.4		200	mV
		$V_{SCD2} = V_{SRN} – V_{SRP}$, PROTECTION_CONTROL[RSNS] = 0	11.1		50	
ΔV_{SCD2}	SCD2 detection threshold voltage program step	$V_{SCD2} = V_{SRN} – V_{SRP}$, PROTECTION_CONTROL[RSNS] = 1		22.2		mV
		$V_{SCD2} = V_{SRN} – V_{SRP}$, PROTECTION_CONTROL[RSNS] = 0		5.55		
V_{OFF_ERR}	OCD, SCC, and SCDx voltage offset	$V_{SRP} – V_{SRN}$<8.3 mV	–1		1	mV
		$V_{SRP} – V_{SRN}$ ≥ 8.3 mV	–2.5		2.5	mV
V_{GAIN_ERR}	OCD, SCC, and SCDx gain error	$V_{SRN} – V_{SRP}$ = 100 mV	–5%		5%	

8.23 Current Protection Timing

Typical values stated where T_A = 25°C and VCC = 7.2 V, Min/Max values stated where T_A = –40°C to 85°C and VCC = 2.2 V to 10 V (unless otherwise noted)

PARAMETER		TEST CONDITION	MIN	NOM	MAX	UNIT
t_{OCD}	OCD detection delay time		1		31	ms
Δt_{OCD}	OCD detection delay time program step			2		ms
t_{SCC}	SCC detection delay time		0		915	µs
Δt_{SCC}	SCC detection delay time program step			61		µs

Copyright © 2022 Texas Instruments Incorporated

8.23 Current Protection Timing (continued)

Typical values stated where T_A = 25°C and VCC = 7.2 V, Min/Max values stated where T_A = –40°C to 85°C and VCC = 2.2 V to 10 V (unless otherwise noted)

PARAMETER		TEST CONDITION	MIN	NOM	MAX	UNIT
t_{SCD1}	SCD1 detection delay time	PROTECTION_CONTROL[SCDDx2] = 0	0		915	µs
		PROTECTION_CONTROL[SCDDx2] = 1	0		1850	
Δt_{SCD1}	SCD1 detection delay time program step	PROTECTION_CONTROL[SCDDx2] = 0		61		µs
		PROTECTION_CONTROL[SCDDx2] = 1		121		
t_{SCD2}	SCD2 detection delay time	PROTECTION_CONTROL[SCDDx2] = 0	0		458	µs
		PROTECTION_CONTROL[SCDDx2] = 1	0		915	
Δt_{SCD2}	SCD2 detection delay time program step	PROTECTION_CONTROL[SCDDx2] = 0		30.5		µs
		PROTECTION_CONTROL[SCDDx2] = 1		61		
t_{DETECT}	Current fault detect time	$V_{SRP} – V_{SRN} = V_T – 3$ mV for OCD, SCD1, and SC2, $V_{SRP} – V_{SRN} = V_T + 3$ mV for SCC			160	µs
t_{ACC}	Current fault delay time accuracy	Max delay setting	–10%		10%	

8.24 N-CH FET Drive (CHG, DSG)

Typical values stated where T_A = 25°C and VCC = 7.2 V, Min/Max values stated where T_A = –40°C to 85°C and VCC = 2.2 V to 10 V (unless otherwise noted)

PARAMETER		TEST CONDITION	MIN	TYP	MAX	UNIT
V_{RATIO}	Output voltage ratio vs battery voltage	$Ratio_{DSG} = (V_{DSG} – V_{VC2})/V_{VC2}$, 2.2 V < V_{VC2} < 4.07 V, 10 MΩ between PACK and DSG, AFE_CONTROL_REGISTER[PMPDRV]=0	2.133	2.333	2.467	—
		$Ratio_{DSG} = (V_{DSG} – V_{VC2})/V_{VC2}$, 2.2 V < V_{VC2} < 4.07 V, 10 MΩ between PACK and DSG, AFE_CONTROL_REGISTER[PMPDRV]=1	1.25	1.4	1.5	
		$Ratio_{CHG} = (V_{CHG} – V_{VC2})/V_{VC2}$, 2.2 V < V_{VC2} < 4.07 V, 10 MΩ between BAT and CHG, AFE_CONTROL_REGISTER[PMPDRV]=0	2.133	2.333	2.467	
		$Ratio_{CHG} = (V_{CHG} – V_{VC2})/V_{VC2}$, 2.2 V < V_{VC2} < 4.07 V, 10 MΩ between BAT and CHG, AFE_CONTROL_REGISTER[PMPDRV]=1	1.25	1.4	1.5	
$V_{(FETON)}$	Output voltage, CHG and DSG on	$V_{DSG(ON)} = V_{DSG} – V_{VC2}$, 4.07 V ≤ V_{VC2} ≤ 10 V, 10 MΩ between PACK and DSG, AFE_CONTROL_REGISTER[PMPDRV]=0	8.75	9.5	10.25	V
		$V_{CHG(ON)} = V_{CHG} – V_{VC2}$, 4.07 V ≤ V_{VC2} ≤ 10 V, 10 MΩ between VC2 and CHG, AFE_CONTROL_REGISTER[PMPDRV]=1	5.15	5.75	6.15	
		$V_{CHG(ON)} = V_{CHG} – V_{VC2}$, 4.07 V ≤ V_{VC2} ≤ 10 V, 10 MΩ between VC2 and CHG, AFE_CONTROL_REGISTER[PMPDRV]=0	8.75	9.5	10.25	
		$V_{CHG(ON)} = V_{CHG} – V_{VC2}$, 4.07 V ≤ V_{VC2} ≤ 10 V, 10 MΩ between VC2 and CHG, AFE_CONTROL_REGISTER[PMPDRV]=1	5.15	5.75	6.15	
$V_{(FETOFF)}$	Output voltage, CHG and DSG off	$V_{DSG(OFF)} = V_{DSG} – V_{PACK}$, 10 MΩ between PACK and DSG	–0.4		0.4	V
		$V_{CHG(OFF)} = V_{CHG} – V_{BAT}$, 10 MΩ between VC2 and CHG	–0.4		0.4	
$I_{CHGPUMP}$	CHG pin charge pump IQ	Measure device IQ with 1uA CHG pin charge pump load and 10uA charge pump load, find the delta. AFE_CONTROL_REGISTER[PUMPDRV]=0		70		µA
$I_{DSGPUMP}$	DSG pin charge pump IQ	Measure device IQ with 1uA DSG pin charge pump load and 10uA charge pump load, find the delta. AFE_CONTROL_REGISTER[PUMPDRV]=0		70		µA

Copyright © 2022 Texas Instruments Incorporated

8.24 N-CH FET Drive (CHG, DSG) (continued)

Typical values stated where T_A = 25°C and VCC = 7.2 V, Min/Max values stated where T_A = –40°C to 85°C and VCC = 2.2 V to 10 V (unless otherwise noted)

PARAMETER		TEST CONDITION	MIN	TYP	MAX	UNIT
t_R	Rise time	V_{DSG} from 0% to 35% $V_{DSG\ (ON)(TYP)}$, V_{BAT} ≥ 2.2 V, C_L = 4.7 nF between DSG and PACK, 5.1 kΩ between DSG and C_L, 10 MΩ between PACK and DSG		200	500	µs
		V_{CHG} from 0% to 35% $V_{CHG\ (ON)(TYP)}$, V_{VC2} ≥ 2.2 V, C_L = 4.7 nF between CHG and VC2, 5.1 kΩ between CHG and C_L, 10 MΩ between VC2 and CHG		200	500	
t_F	Fall time	V_{DSG} from $V_{DSG(ON)(TYP)}$ to 1 V, V_{VC2} ≥ 2.2 V, C_L = 4.7 nF between DSG and PACK, 5.1 kΩ between DSG and C_L, 10 MΩ between PACK and DSG		40	300	µs
		V_{CHG} from $V_{CHG(ON)(TYP)}$ to 1 V, V_{VC2} ≥ 2.2 V, C_L = 4.7 nF between CHG and VC2, 5.1 kΩ between CHG and C_L, 10 MΩ between VC2 and CHG		40	200	

8.25 I²C Interface I/O

Typical values stated where T_A = 25°C and VCC = 7.2 V, Min/Max values stated where T_A = –40°C to 85°C and VCC = 2.2 V to 10 V (unless otherwise noted)

PARAMETER		TEST CONDITION	MIN	TYP	MAX	UNIT
VDD	IO Supply Voltage		1.1		5.5	V
V_{IH}	Input voltage high	SCL, SDA	0.78			V
V_{IL}	Input voltage low	SCL, SDA	–0.5		0.42	V
V_{OL}	Output low voltage	SCL, SDA, I_{OL} = 3 mA			0.3	V
C_{IN}	Input capacitance				10	pF
I_{LKG}	Input leakage current			1		µA

8.26 I²C Interface Timing

Typical values stated where T_A = 25°C and VCC = 7.2 V, Min/Max values stated where T_A = –40°C to 85°C and VCC = 2.2 V to 10 V (unless otherwise noted)

PARAMETER		TEST CONDITION	MIN	NOM	MAX	UNIT
t_R	Clock rise time	10% to 90%			300	ns
t_F	Clock fall time	90% to 10%			300	ns
t_{HIGH}	Clock high period		600			ns
t_{LOW}	Clock low period		1.3			µs
$t_{SU(START)}$	Repeated start setup time		600			ns
$t_{d(START)}$	Start for first falling edge to SCL		600			ns
$t_{SU(DATA)}$	Data setup time		100			ns
$t_{HD(DATA)}$	Data hold time		0			µs
$t_{SU(STOP)}$	Stop setup time		600			ns
t_{BUF}	Bus free time between stop and start		1.3			µs
f_{SW}	Clock operating frequency	SLAVE mode, SCL 50% duty cycle			400	kHz

Copyright © 2022 Texas Instruments Incorporated

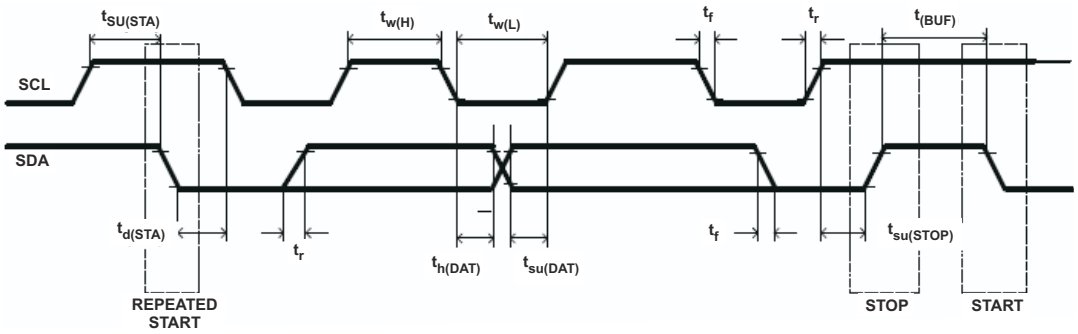

Figure 8-1. I²C Timing

Copyright © 2022 Texas Instruments Incorporated

8.27 Typical Characteristics

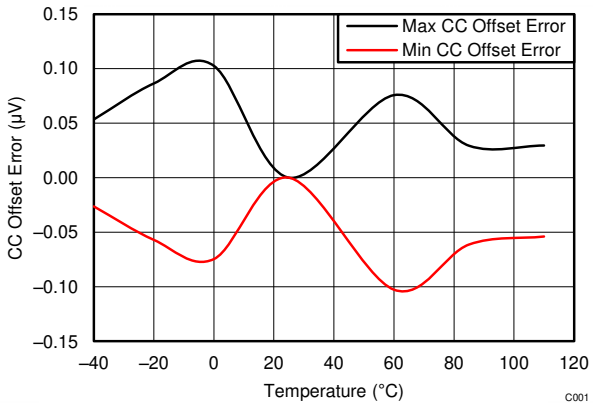

Figure 8-2. CC Offset Error vs. Temperature

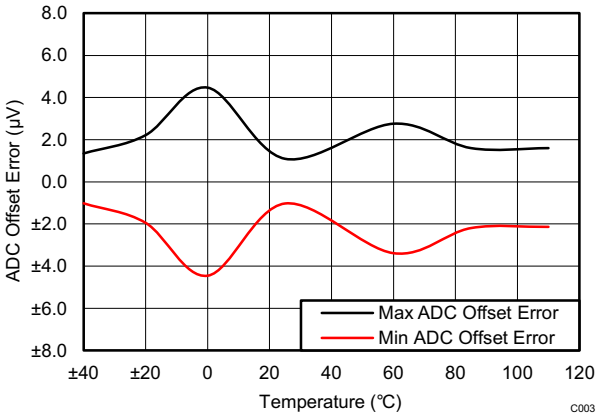

Figure 8-3. ADC Offset Error vs. Temperature

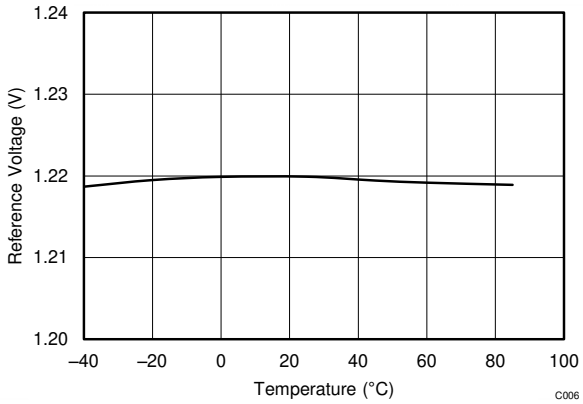

Figure 8-4. Reference Voltage vs. Temperature

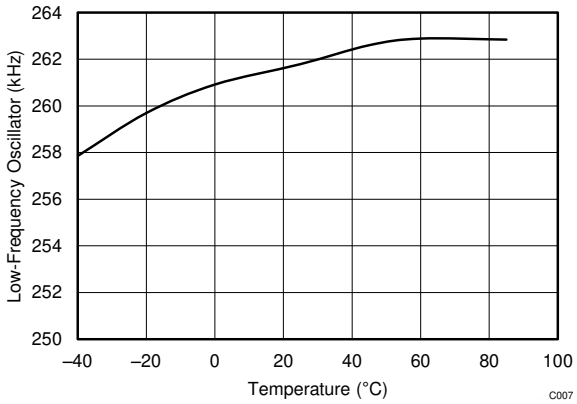

Figure 8-5. Low-Frequency Oscillator vs. Temperature

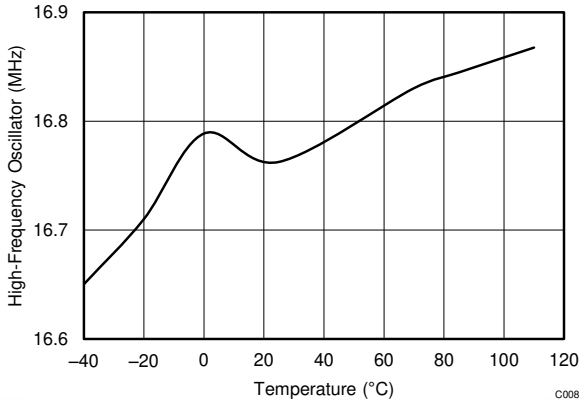

Figure 8-6. High-Frequency Oscillator vs. Temperature

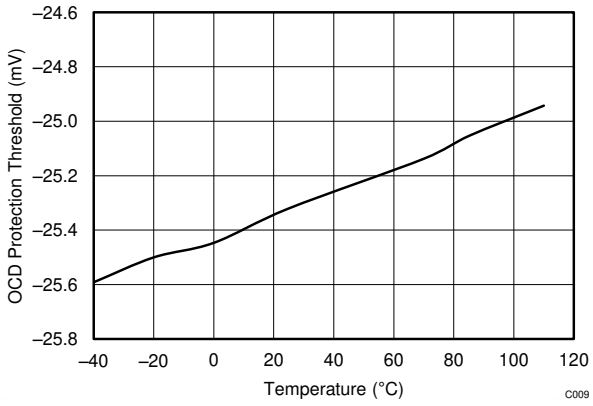

Threshold setting is 25 mV.

Figure 8-7. Overcurrent Discharge Protection Threshold vs. Temperature

8.27 Typical Characteristics (continued)

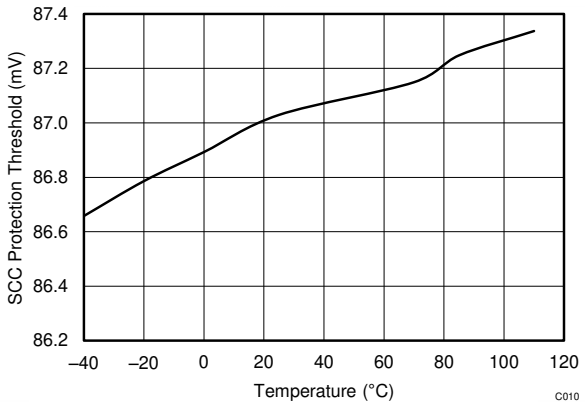

Threshold setting is 88.8 mV.

Figure 8-8. Short Circuit Charge Protection Threshold vs. Temperature

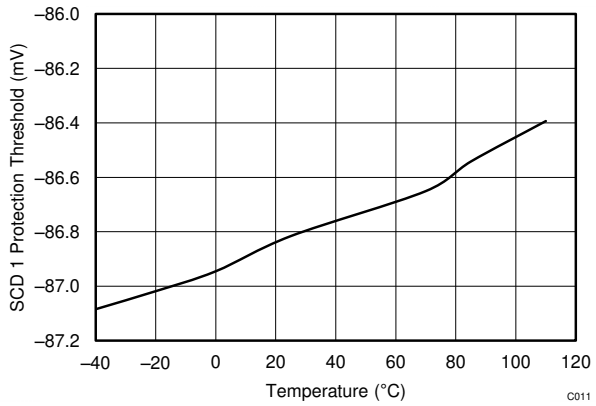

Threshold setting is –88.8 mV.

Figure 8-9. Short Circuit Discharge 1 Protection Threshold vs. Temperature

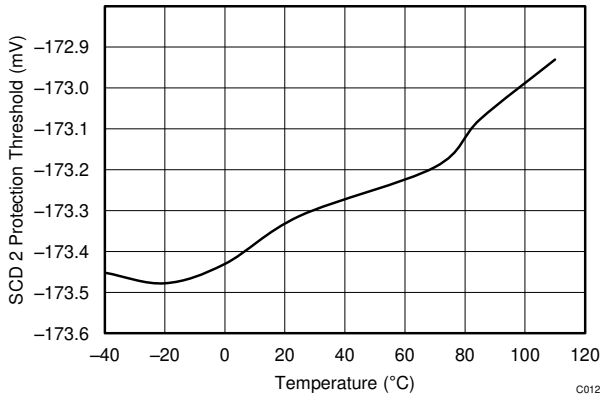

Threshold setting is –177.7 mV.

Figure 8-10. Short Circuit Discharge 2 Protection Threshold vs. Temperature

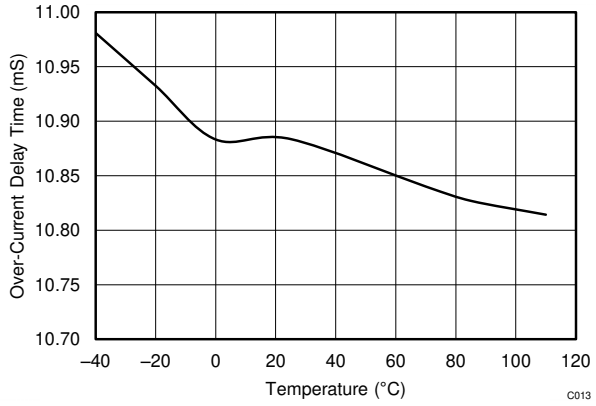

Threshold setting is 11 ms.

Figure 8-11. Overcurrent Delay Time vs. Temperature

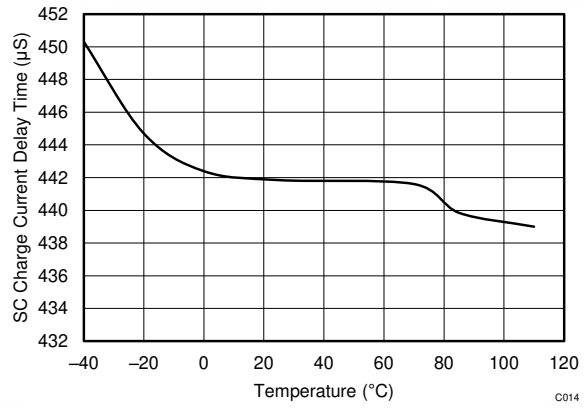

Threshold setting is 465 µs.

Figure 8-12. Short Circuit Charge Current Delay Time vs. Temperature

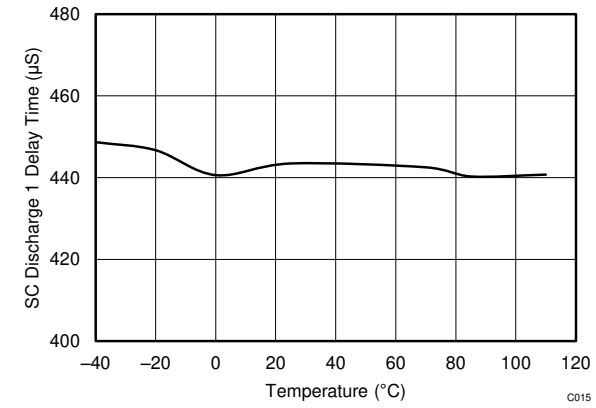

Threshold setting is 465 µs (including internal delay).

Figure 8-13. Short Circuit Discharge 1 Delay Time vs. Temperature

Copyright © 2022 Texas Instruments Incorporated

8.27 Typical Characteristics (continued)

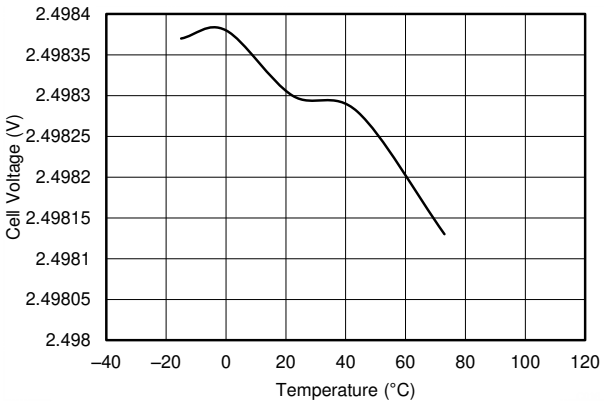

Figure 8-14. V_{CELL} Measurement at 2.5-V vs. Temperature

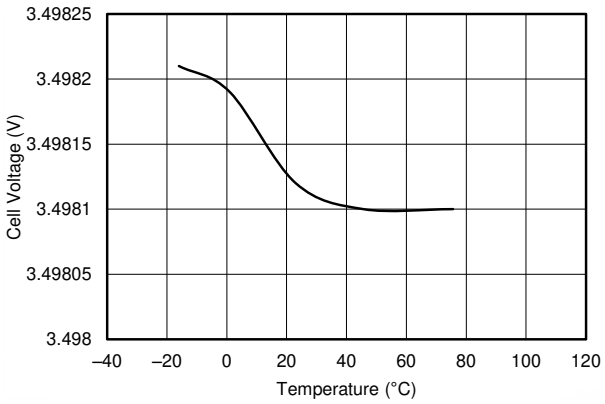

This is the V_{CELL} average for single cell.

Figure 8-15. V_{CELL} Measurement at 3.5-V vs. Temperature

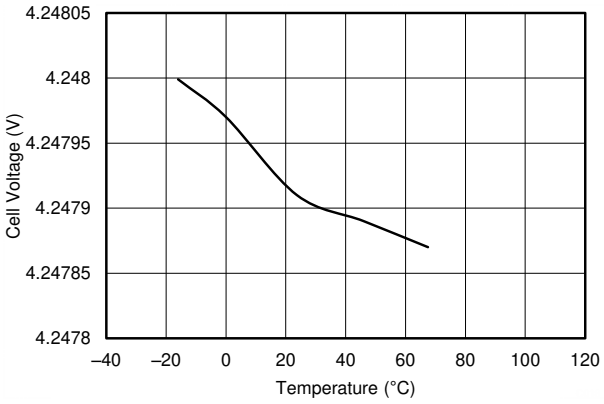

A. This is the V_{CELL} average for single cell.

Figure 8-16. V_{CELL} Measurement at 4.25-V vs. Temperature

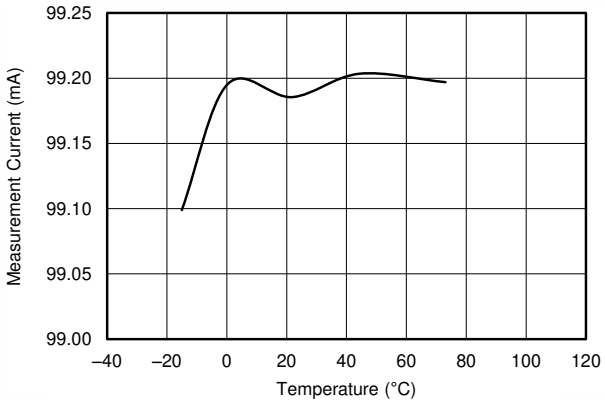

I_{SET} = 100 mA, RSNS= 1 Ω

Figure 8-17. I Measured vs. Temperature

9 Detailed Description

9.1 Overview

The BQ28Z620 gas gauge is a fully integrated battery manager that employs flash-based firmware and integrated hardware protection to provide a complete solution for battery-stack architectures composed of 1- to 2-series cells. The BQ28Z620 device interfaces with a host system via an I^2C protocol. High-performance, integrated analog peripherals enable support for a sense resistor down to 1 mΩ and simultaneous current/voltage data conversion for instant power calculations. The following sections detail all of the major component blocks included as part of the BQ28Z620 device.

9.2 Functional Block Diagram

The *Functional Block Diagram* depicts the analog (AFE) and digital (AGG) peripheral content in the BQ28Z620 device.

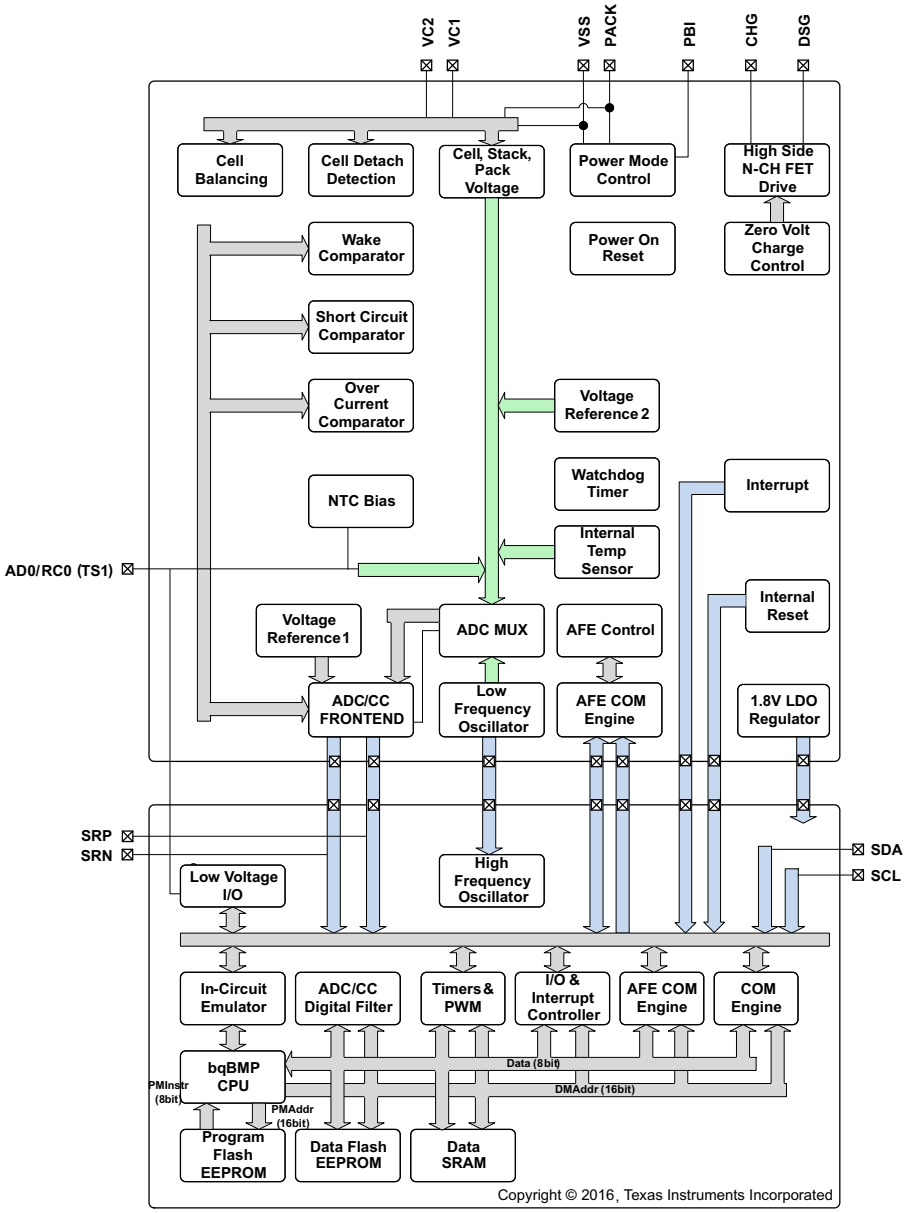

Copyright © 2022 Texas Instruments Incorporated

9.3 Feature Description

9.3.1 Battery Parameter Measurements

The BQ28Z620 device measures cell voltage and current simultaneously, and measures temperature to calculate the information related to remaining capacity, full charge capacity, state-of-health, and other gauging parameters.

9.3.1.1 BQ28Z620 Processor

The BQ28Z620 device uses a custom TI-proprietary processor design that features a Harvard architecture and operates at frequencies up to 4.2 MHz. Using an adaptive, three-stage instruction pipeline, the BQ28Z620 processor supports variable instruction length of 8, 16, or 24 bits.

9.3.2 Coulomb Counter (CC)

The first ADC is an integrating converter designed specifically for coulomb counting. The converter resolution is a function of its full-scale range and number of bits, yielding a 3.74-µV resolution.

9.3.3 CC Digital Filter

The CC digital filter generates a 16-bit conversion value from the delta-sigma CC front-end. Its FIR filter uses the LFO clock output, which allows it to stop the HFO clock during conversions. New conversions are available every 250 ms while CCTL[CC_ON] = 1. Proper use of this peripheral requires turning on the CC modulator in the AFE.

9.3.4 ADC Multiplexer

The ADC multiplexer provides selectable connections to the VCx inputs, TS1 inputs, internal temperature sensor, internal reference voltages, internal 1.8-V regulator, PACK input, and VSS ground reference input. In addition, the multiplexer can independently enable the TS1 input connection to the internal thermistor biasing circuitry, and enables the user to short the multiplexer inputs for test and calibration purposes.

9.3.5 Analog-to-Digital Converter (ADC)

The second ADC is a 16-bit delta-sigma converter designed for general-purpose measurements. The ADC automatically scales the input voltage range during sampling based on channel selection. The converter resolution is a function of its full-scale range and number of bits, yielding a 38-µV resolution. The default conversion time of the ADC is 31.25 ms, but is user-configurable down to 1.95 ms. Decreasing the conversion time presents a tradeoff between conversion speed and accuracy, as the resolution decreases for faster conversion times.

9.3.6 ADC Digital Filter

The ADC digital filter generates a 24-bit conversion result from the delta-sigma ADC front end. Its FIR filter uses the LFO clock, which allows it to stop the HFO clock during conversions. The ADC digital filter is capable of providing two 24-bit results: one result from the delta-sigma ADC front-end and a second synchronous result from the delta-sigma CC front-end.

9.3.7 Internal Temperature Sensor

An internal temperature sensor is available on the BQ28Z620 device to reduce the cost, power, and size of the external components necessary to measure temperature. It is available for connection to the ADC using the multiplexer, and is ideal for quickly determining pack temperature under a variety of operating conditions.

9.3.8 External Temperature Sensor Support

The TS1 input is enabled with an internal 18-kΩ (Typ.) linearization pull-up resistor to support the use of a 10-kΩ (25°C) NTC external thermistor, such as the Semitec 103AT-2. The NTC thermistor should be connected between VSS and the individual TS1 pin. The analog measurement is then taken via the ADC through its input multiplexer. If a different thermistor type is required, then changes to configurations may be required.

Copyright © 2022 Texas Instruments Incorporated

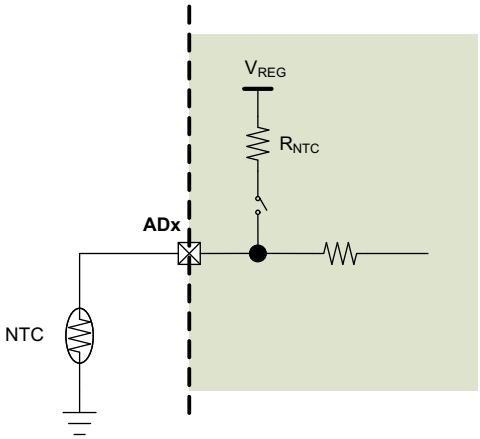

Figure 9-1. External Thermistor Biasing

9.3.9 Power Supply Control

The BQ28Z620 device manages its supply voltage dynamically according to operating conditions. When V_{VC2} > $V_{SWITCHOVER–}$ + V_{HYS}, the AFE connects an internal switch to BAT and uses this pin to supply power to its internal 1.8-V LDO, which subsequently powers all device logic and flash operations. Once VC2 decreases to V_{VC2} < $V_{SWITCHOVER–}$, the AFE disconnects its internal switch from VC2 and connects another switch to PACK, allowing sourcing of power from a charger (if present). An external capacitor connected to PBI provides a momentary supply voltage to help guard against system brownouts due to transient short-circuit or overload events that pull VC2 below $V_{SWITCHOVER–}$.

9.3.10 Power-On Reset

In the event of a power-cycle, the BQ28Z620 AFE holds its internal RESET output pin high for t_{RST} duration to allow its internal 1.8-V LDO and LFO to stabilize before running the AGG. The AFE enters power-on reset when the voltage at V_{REG} falls below $V_{REGIT–}$ and exits reset when V_{REG} rises above $V_{REGIT–}$ + V_{HYS} for t_{RST} time. After t_{RST}, the BQ28Z620 AGG will write its trim values to the AFE.

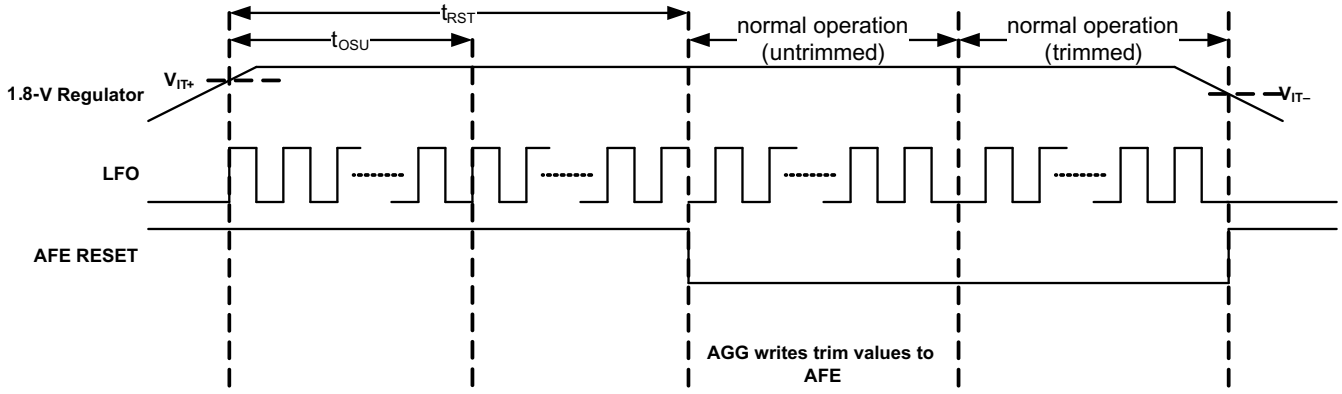

Figure 9-2. POR Timing Diagram

9.3.11 Bus Communication Interface

The BQ28Z620 device has an I^2C bus communication interface. This device has the option to broadcast information to a smart charger to provide key information to adjust the charging current and charging voltage based on the temperature or individual cell voltages.

Copyright © 2022 Texas Instruments Incorporated

CAUTION

If the device is configured as a single-master architecture (an application processor) and an occasional NACK is detected in the operation, the master can resend the transaction. However, in a multi-master architecture, an incorrect ACK leading to accidental loss of bus arbitration can cause a master to wait incorrectly for another master to clear the bus. If this master does not get a bus-free signal, then it must have in place a method to look for the bus and assume it is free after some period of time. Also, if possible, set the clock speed to be 100 kHz or less to significantly reduce the issue described above for multi-mode operation.

9.3.12 I²C Timeout

The I²C engine will release both SDA and SCL if the I²C bus is held low for ~2 seconds. If the BQ28Z620 device were holding the lines, releasing them frees the master to drive the lines. Note: that the low time setting can be under firmware control but the HW default is 2 seconds.

9.3.13 Cell Balancing Support

The integrated cell balancing FETs included in the BQ28Z620 device enable the AFE to bypass cell current around a given cell or numerous cells to effectively balance the entire battery stack. External series resistors placed between the cell connections and the VCx input pins set the balancing current magnitude. The cell balancing circuitry can be enabled or disabled via the ***CELL_BAL_DET[CB2, CB1]*** control register. Series input resistors between 100 Ω and 1 kΩ are recommended for effective cell balancing.

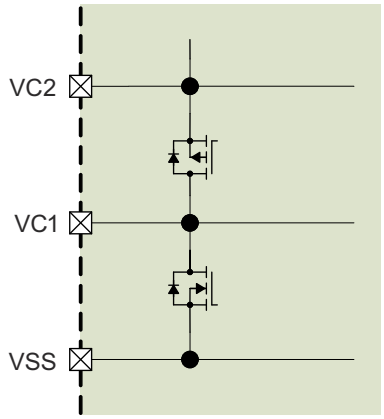

Figure 9-3. Internal Cell Balancing

9.3.14 N-Channel Protection FET Drive

The BQ28Z620 device controls two external N-Channel MOSFETs in a back-to-back configuration for battery protection. The charge (CHG) and discharge (DSG) FETs are automatically disabled if a safety fault (AOLD, ASSC, ASCD, SOV) is detected, and can also be manually turned off using ***AFE_CONTROL[CHGEN, DSGEN]*** = 0, 0. When the gate drive is disabled, an internal circuit discharges CHG to VC2 and DSG to PACK.

The charge pump current consumption gets higher when the MOSFET gate leakage current (IGSS) increases. Refer to the MOSFET data sheet to select the proper MOSFET.

To minimize device quiescent current in SLEEP mode, the CHG and DSG gate drive voltage could be reduced to 5.75 V by setting *AFE_CONTROL_REGISTER[PMPDRV]* = 0.

9.3.15 Low Frequency Oscillator

The BQ28Z620 AFE includes a low frequency oscillator (LFO) running at 262.144 kHz. The AFE monitors the LFO frequency and indicates a failure via ***LATCH_STATUS[LFO]*** if the output frequency is much lower than normal.

Copyright © 2022 Texas Instruments Incorporated

9.3.16 High Frequency Oscillator

The BQ28Z620 AGG includes a high frequency oscillator (HFO) running at 16.78 MHz. It is synthesized from the LFO output and scaled down to 8.388 MHz with 50% duty cycle.

9.3.17 1.8-V Low Dropout Regulator

The BQ28Z620 AFE contains an integrated 1.8-V LDO that provides regulated supply voltage for the device CPU and internal digital logic.

9.3.18 Internal Voltage References

The BQ28Z620 AFE provides two internal voltage references with V_{REF1}, used by the ADC and CC, while V_{REF2} is used by the LDO, LFO, current wake comparator, and OCD/SCC/SCD1/SCD2 current protection circuitry.

9.3.19 Overcurrent in Discharge Protection

The overcurrent in discharge (OCD) function detects abnormally high current in the discharge direction. The overload in discharge threshold and delay time are configurable via the OCD_CONTROL register. The thresholds and timing can be fine-tuned even further based on a sense resistor with lower resistance or wider tolerance via the PROTECTION_CONTROL register. The detection circuit also incorporates a filtered delay before disabling the CHG and DSG FETs. When an OCD event occurs, the ***LATCH_STATUS[OCD]*** bit is set to 1 and is latched until it is cleared and the fault condition has been removed.

9.3.20 Short-Circuit Current in Charge Protection

The short-circuit current in charge (SCC) function detects catastrophic current conditions in the charge direction. The short-circuit in charge threshold and delay time are configurable via the SCC_CONTROL register. The thresholds and timing can be fine-tuned even further based on a sense resistor with lower resistance or wider tolerance via the PROTECTION_CONTROL register. The detection circuit also incorporates a blanking delay before disabling the CHG and DSG FETs. When an SCC event occurs, the ***LATCH_STATUS[SCC]*** bit is set to 1 and is latched until it is cleared and the fault condition has been removed.

9.3.21 Short-Circuit Current in Discharge 1 and 2 Protection

The short-circuit current in discharge (SCD) function detects catastrophic current conditions in the discharge direction. The short-circuit in discharge thresholds and delay times are configurable via the SCD1_CONTROL and SCD2_CONTROL registers. The thresholds and timing can be fine-tuned even further based on a sense resistor with lower resistance or wider tolerance via the PROTECTION_CONTROL register. The detection circuit also incorporates a blanking delay before disabling the CHG and DSG FETs. When an SCD event occurs, the ***LATCH_STATUS[SCD1]*** or ***LATCH_STATUS[SCD2]*** bit is set to 1 and is latched until it is cleared and the fault condition has been removed.

9.3.22 Primary Protection Features

The BQ28Z620 gas gauge supports the following battery and system level protection features, which can be configured using firmware:

- Cell Undervoltage Protection
- Cell Overvoltage Protection
- Overcurrent in CHARGE Mode Protection
- Overcurrent in DISCHARGE Mode Protection
- Overload in DISCHARGE Mode Protection
- Short Circuit in CHARGE Mode Protection
- Overtemperature in CHARGE Mode Protection
- Overtemperature in DISCHARGE Mode Protection
- Precharge Timeout Protection
- Fast Charge Timeout Protection

9.3.23 Gas Gauging

This device uses the Impedance Track™ technology to measure and determine the available charge in battery cells. The accuracy achieved using this method is better than 1% error over the lifetime of the battery. There

Copyright © 2022 Texas Instruments Incorporated

is no full charge/discharge learning cycle required. See the *Theory and Implementation of Impedance Track Battery Fuel-Gauging Algorithm Application Report* (SLUA364B) for further details.

9.3.24 Charge Control Features

This device supports charge control features, such as:

- Reports charging voltage and charging current based on the active temperature range—JEITA temperature ranges T1, T2, T3, T4, T5, and T6
- Provides more complex charging profiles, including sub-ranges within a standard temperature range
- Reports the appropriate charging current required for constant current charging and the appropriate charging voltage needed for constant voltage charging to a smart charger, using the bus communication interface
- Selects the chemical state-of-charge of each battery cell using the Impedance Track method, and reduces the voltage difference between cells when cell balancing multiple cells in a series
- Provides pre-charging/zero-volt charging
- Employs charge inhibit and charge suspend if battery pack temperature is out of programmed range
- Reports charging faults and indicates charge status via charge and discharge alarms

9.3.25 Authentication

This device supports security by:

- Authentication by the host using the SHA-1 method
- The gas gauge requires SHA-1 authentication before the device can be unsealed or allow full access.

9.4 Device Functional Modes

This device supports three modes, but the current consumption varies, based on firmware control of certain functions and modes of operation:

- NORMAL mode: In this mode, the device performs measurements, calculations, protections, and data updates every 250-ms intervals. Between these intervals, the device is operating in a reduced power stage to minimize total average current consumption.
- SLEEP mode: In this mode, the device performs measurements, calculations, protections, and data updates in adjustable time intervals. Between these intervals, the device is operating in a reduced power stage to minimize total average current consumption.
- SHUTDOWN mode: The device is completely disabled.

9.4.1 Lifetime Logging Features

The device supports data logging of several key parameters for warranty and analysis:

- Maximum and minimum cell temperature
- Maximum current in CHARGE or DISCHARGE mode
- Maximum and minimum cell voltages

9.4.2 Configuration

The device supports accurate data measurements and data logging of several key parameters.

9.4.2.1 Coulomb Counting

The device uses an integrating delta-sigma analog-to-digital converter (ADC) for current measurement. The ADC measures charge/discharge flow of the battery by measuring the voltage across a very small external sense resistor. The integrating ADC measures a bipolar signal from a range of –100 mV to 100 mV, with a positive value when $V_{(SRP)} - V_{(SRN)}$, indicating charge current and a negative value indicating discharge current. The integration method uses a continuous timer and internal counter, which has a rate of 0.65 nVh.

9.4.2.2 Cell Voltage Measurements

The BQ28Z620 measures the individual cell voltages at 250-ms intervals using an ADC. This measured value is internally scaled for the ADC and is calibrated to reduce any errors due to offsets. This data is also used for calculating the impedance of the individual cell for Impedance Track gas gauging.

Copyright © 2022 Texas Instruments Incorporated

9.4.2.3 Current Measurements

The current measurement is performed by measuring the voltage drop across the external sense resistor (1 mΩ to 3 mΩ) and the polarity of the differential voltage determines if the cell is in the CHARGE or DISCHARGE mode.

9.4.2.4 Auto Calibration

The auto-calibration feature helps to cancel any voltage offset across the SRP and SRN pins for accurate measurement of the cell voltage, charge/discharge current, and thermistor temperature. The auto-calibration is performed when there is no communication activity for a minimum of 5 s on the bus lines.

9.4.2.5 Temperature Measurements

This device has an internal sensor for on-die temperature measurements, and the ability to support external temperature measurements via the external NTC on the TS1 pin. These two measurements are individually enabled and configured.

Copyright © 2022 Texas Instruments Incorporated

10 Applications and Implementation

10.1 Application Information

The BQ28Z620 gas gauge is a primary protection device that can be used with a 1- to 2-series Li-ion/Li-polymer battery pack. To implement and design a comprehensive set of parameters for a specific battery pack, the user needs Battery Management Studio (BQStudio), which is a graphical user-interface tool installed on a PC during development. The firmware installed in the product has default values, which are summarized in the *BQ28Z620 Technical Reference Manual* for this product. Using the BQStudio tool, these default values can be changed to cater to specific application requirements during development once the system parameters, such as fault trigger thresholds for protection, enable/disable of certain features for operation, configuration of cells, chemistry that best matches the cell used, and more are known. This data can be referred to as the "golden image."

10.2 Typical Applications

Figure 10-1 shows the BQ28Z620 application schematic for the 2-series configuration. Figure 10-2 shows a wireless (Bluetooth) speaker application block diagram.

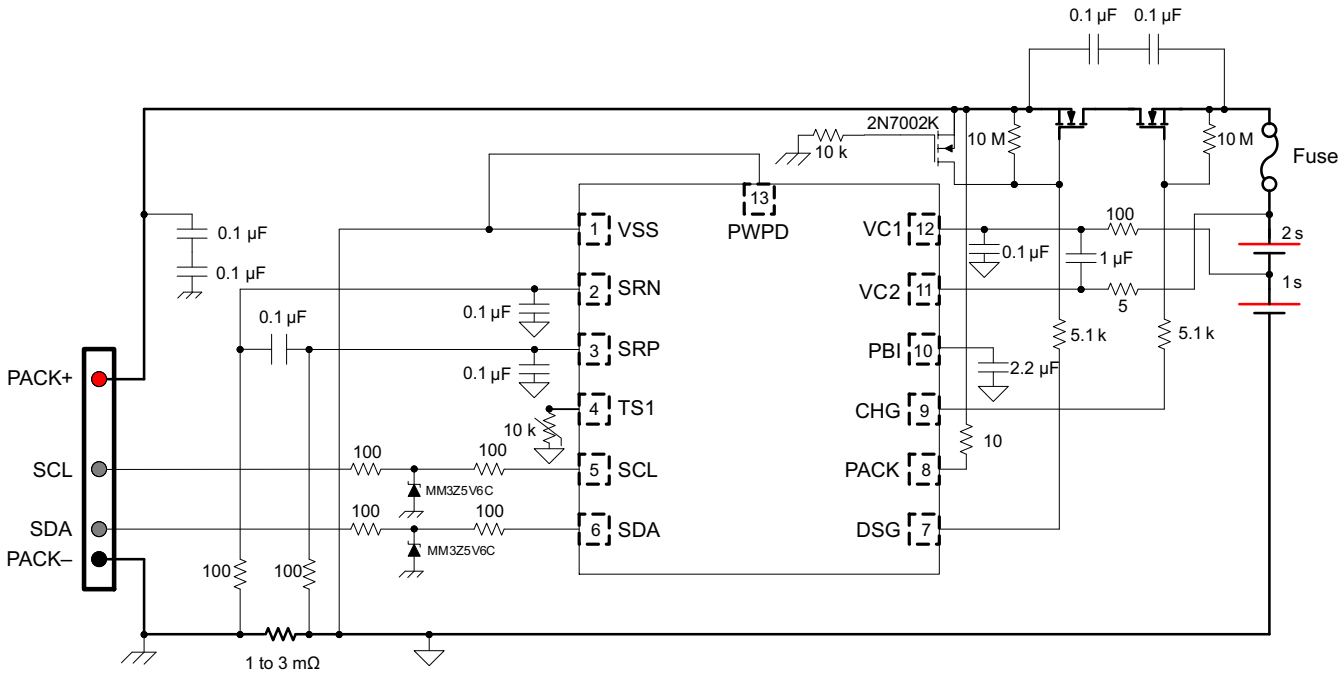

Note: The input filter capacitors of 0.1 µF for the SRN and SRP pins must be located near the pins of the device.

Figure 10-1. BQ28Z620 2-Series Cell Typical Implementation

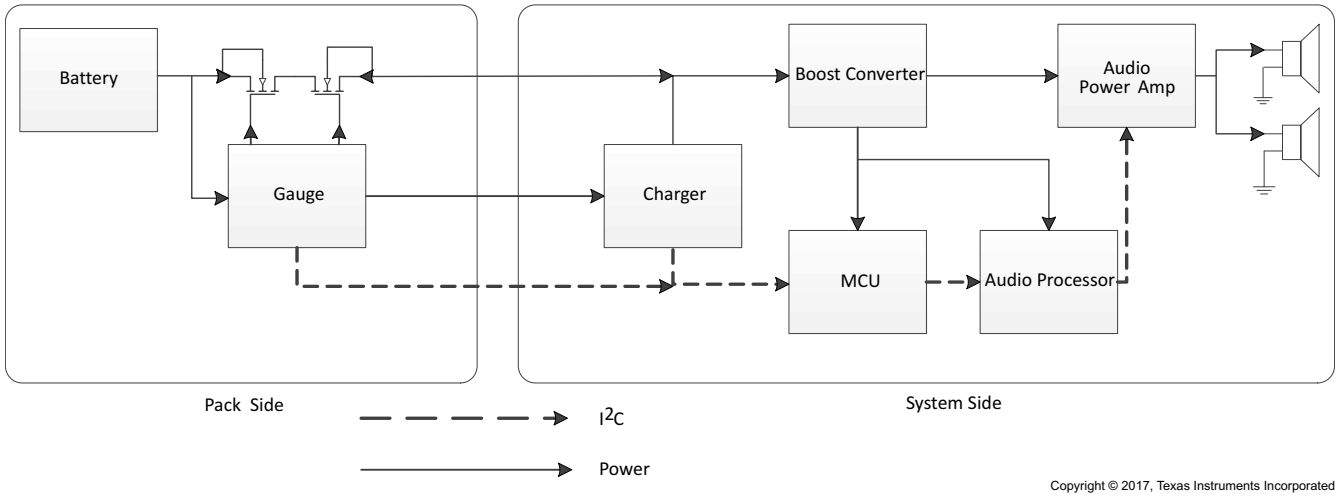

Figure 10-2. Wireless (Bluetooth) Speaker Application Block Diagram

10.2.1 Design Requirements (Default)

Design Parameter	Example
Cell Configuration	2s1p (2-series with 1 Parallel)
Design Capacity	4400 mAh
Device Chemistry	100 ($LiCoO_2$/graphitized carbon)
Cell Overvoltage at Standard Temperature	4300 mV
Cell Undervoltage	2500 mV
Shutdown Voltage	2300 mV
Overcurrent in CHARGE Mode	6000 mA
Overcurrent in DISCHARGE Mode	–6000 mA
Short Circuit in CHARGE Mode	0.1 V/Rsense across SRP, SRN
Short Circuit in DISCHARGE 1 Mode	–0.1 V/Rsense across SRP, SRN
Safety Over Voltage	4500 mV
Cell Balancing	Disabled
Internal and External Temperature Sensor	Enabled
Under Temperature Charging	0°C
Under Temperature Discharging	0°C
BROADCAST Mode	Enabled

10.2.2 Detailed Design Procedure

10.2.2.1 Setting Design Parameters

For the firmware settings needed for the design requirements, refer to the *BQ28Z620 Technical Reference Manual*.

- To set the 2s1p battery pack, go to data flash ***Configuration: DA Configuration*** register's bit 0 (CC0) = 1.
- To set design capacity, set the data flash value to 4400 in the ***Gas Gauging: Design: Design Capacity*** register.
- To set device chemistry, go to data flash ***SBS Configuration: Data: Device Chemistry***. The BQStudio software automatically populates the correct chemistry identification. This selection is derived from using the BQChem feature in the tools and choosing the option that matches the device chemistry from the list.
- To protect against cell overvoltage, set the data flash value to 4300 in ***Protections: COV: Standard Temp***.
- To protect against cell undervoltage, set the data flash value to 2500 in the ***Protections: CUV*** register.
- To set the shutdown voltage to prevent further pack depletion due to low pack voltage, program ***Power: Shutdown: Shutdown*** voltage = 2300.

Copyright © 2022 Texas Instruments Incorporated

- To protect against large charging currents when the AC adapter is attached, set the data flash value to 6000 in the ***Protections: OCC: Threshold*** register.
- To protect against large discharging currents when heavy loads are attached, set the data flash value to –6000 in the ***Protections: OCD: Threshold*** register.
- Program a short circuit delay timer and threshold setting to enable the operating the system for large short transient current pulses. These two parameters are under ***Protections: ASCC: Threshold*** = 100 for charging current. The discharge current setting is ***Protections: ASCD:Threshold*** = –100 mV.
- To prevent the cells from overcharging and adding a second level of safety, there is a register setting that will shut down the device if any of the cells voltage measurement is greater than the Safety Over Voltage setting for greater than the delay time. Set this data flash value to 4500 in ***Permanent Fail: SOV: Threshold***.
- To disable the cell balancing feature, set the data flash value to 0 in ***Settings: Configuration: Balancing Configuration***: bit 0 (CB).
- To enable the internal temperature and the external temperature sensors: Set ***Settings:Configuration: Temperature Enable***: Bit 0 (TSInt) = 1 for the internal sensor; set Bit 1 (TS1) = 1 for the external sensor.
- To prevent charging of the battery pack if the temperature falls below 0°C, set ***Protections: UTC:Threshold*** = 0.
- To prevent discharging of the battery pack if the temperature falls below 0°C, set ***Protections: UTD:Threshold*** = 0.
- To provide required information to the smart chargers, the gas gauge must operate in BROADCAST mode. To enable this, set the [BCAST] bit in ***Configuration: SBS Configuration*** 2: Bit 0 [BCAST] = 1.

Each parameter listed for fault trigger thresholds has a delay timer setting associated for any noise filtering. These values, along with the trigger thresholds for fault detection, may be changed based upon the application requirements using the data flash settings in the appropriate register stated in the *BQ28Z620 Technical Reference Manual*.

10.2.2.2 Calibration Process

The calibration of current, voltage, and temperature readings is accessible by writing 0xF081 or 0xF082 to *ManufacturerAccess()*. A detailed procedure is included in the *BQ28Z620 Technical Reference Manual* in the *Calibration* section. The description allows for calibration of cell voltage measurement offset, battery voltage, pack voltage, current calibration, coulomb counter offset, PCB offset, CC gain/capacity gain, and temperature measurement for both internal and external sensors.

10.2.2.3 Gauging Data Updates

When a battery pack enabled with the BQ28Z620 device is first cycled, the value of *FullChargeCapacity()* updates several times. Figure 10-3 shows *RemainingCapacity()* and *FullChargeCapacity()*, and where those updates occur. As part of the Impedance Track algorithm, it is expected that *FullChargeCapacity()* may update at the end of charge, at the end of discharge, and at rest.

Copyright © 2022 Texas Instruments Incorporated

10.2.3 Application Curve

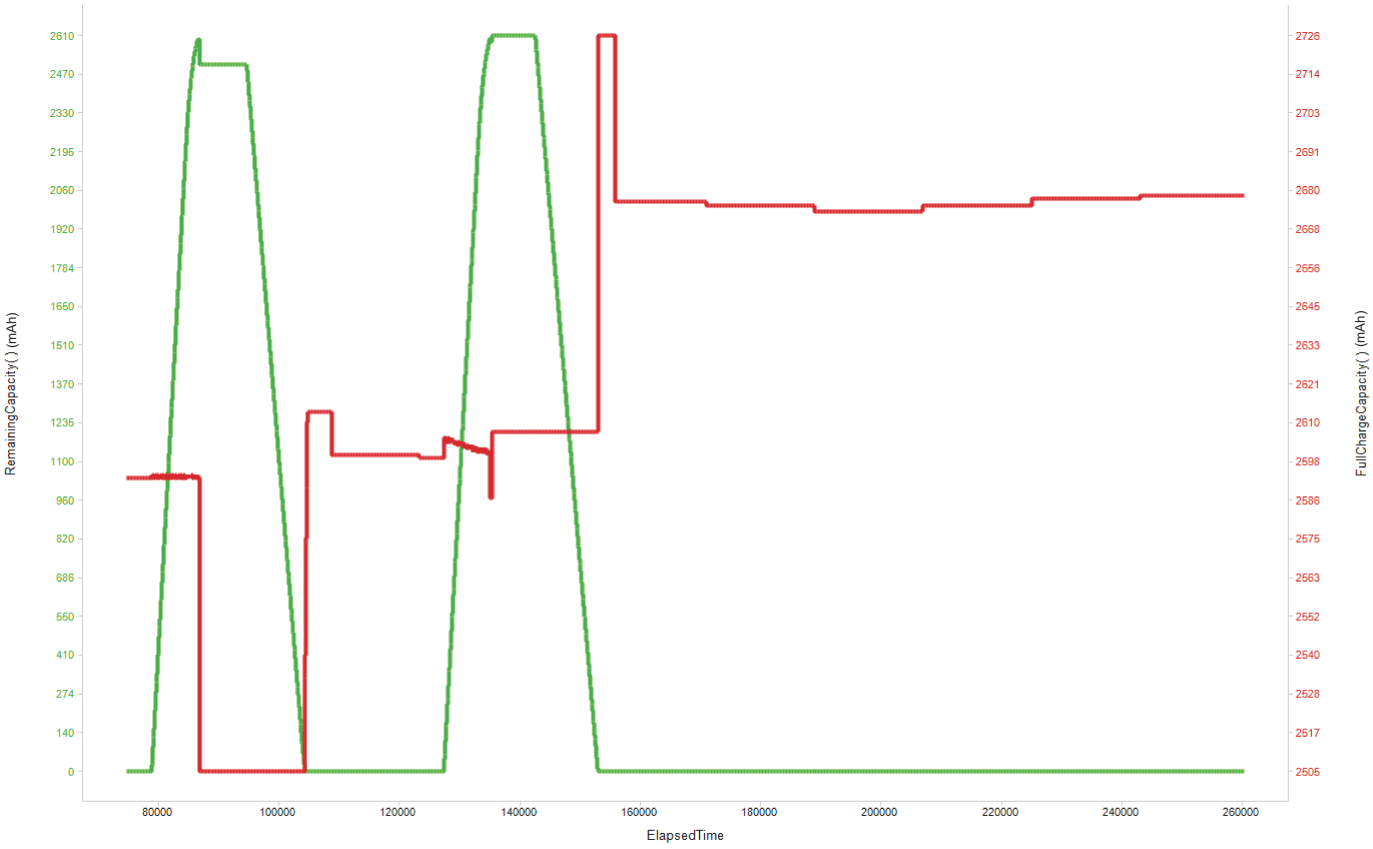

Figure 10-3. Elapsed Time(s)

11 Power Supply Recommendations

There are two inputs for this device, the PACK input and VC2. The PACK input can be an unregulated input from a typical AC adapter. This input should always be greater than the maximum voltage associated with the number of series cells configured. The input voltage for the VC2 pin will have a minimum of 2.2 V to a maximum of 26 V with the recommended external RC filter.

Copyright © 2022 Texas Instruments Incorporated

12 Layout

12.1 Layout Guidelines

- The layout for the high-current path begins at the PACK+ pin of the battery pack. As charge current travels through the pack, it finds its way through protection FETs, a chemical fuse, the Li-ion cells and cell connections, and the sense resistor, and then returns to the PACK– pin. In addition, some components are placed across the PACK+ and PACK– pins to reduce effects from electrostatic discharge.
- The N-channel charge and discharge FETs must be selected for a given application. Most portable battery applications are a good option for the CSD16412Q5A. These FETs are rated at 14-A, 25-V device with Rds(on) of 11 mΩ when the gate drive voltage is 10 V. The gates of all protection FETs are pulled to the source with a high-value resistor between the gate and source to ensure they are turned off if the gate drive is open. The capacitors (both 0.1-µF values) placed across the FETs are to help protect the FETs during an ESD event. The use of two devices ensures normal operation if one of them becomes shorted. For effective ESD protection, the copper trace inductance of the capacitor leads must be designed to be as short and wide as possible. Ensure that the voltage rating of both these capacitors is adequate to hold off the applied voltage if one of the capacitors becomes shorted.
- The quality of the Kelvin connections at the sense resistor is critical. The sense resistor must have a temperature coefficient no greater than 50 ppm in order to minimize current measurement drift with temperature. Choose the value of the sense resistor to correspond to the available overcurrent and short-circuit ranges of the BQ28Z620. Select the smallest value possible in order to minimize the negative voltage generated on the BQ28Z620 VSS node(s) during a short circuit. This pin has an absolute minimum of –0.3 V. Parallel resistors can be used as long as good Kelvin sensing is ensured. The device is designed to support a 1-mΩ to 3-mΩ sense resistor.
- A pair of series 0.1-µF ceramic capacitors is placed across the PACK+ and PACK– pins to help in the mitigation of external electrostatic discharges. The two devices in series ensure continued operation of the pack if one of the capacitors becomes shorted. Optionally, a transorb such as the SMBJ2A can be placed across the pins to further improve ESD immunity.
- In reference to the gas gauge circuit the following features require attention for component placement and layout: Differential Low-Pass Filter, I^2C communication, and PBI (Power Backup Input).
- The BQ28Z620 uses an integrating delta-sigma ADC for current measurements. Add a 100-Ω resistor from the sense resistor to the SRP and SRN inputs of the device. Place a 0.1-µF filter capacitor across the SRP and SRN inputs. Optional 0.1-µF filter capacitors can be added for additional noise filtering for each sense input pin to ground, if required for your circuit. Place all filter components as close as possible to the device. Route the traces from the sense resistor in parallel to the filter circuit. Adding a ground plane around the filter network can add additional noise immunity.

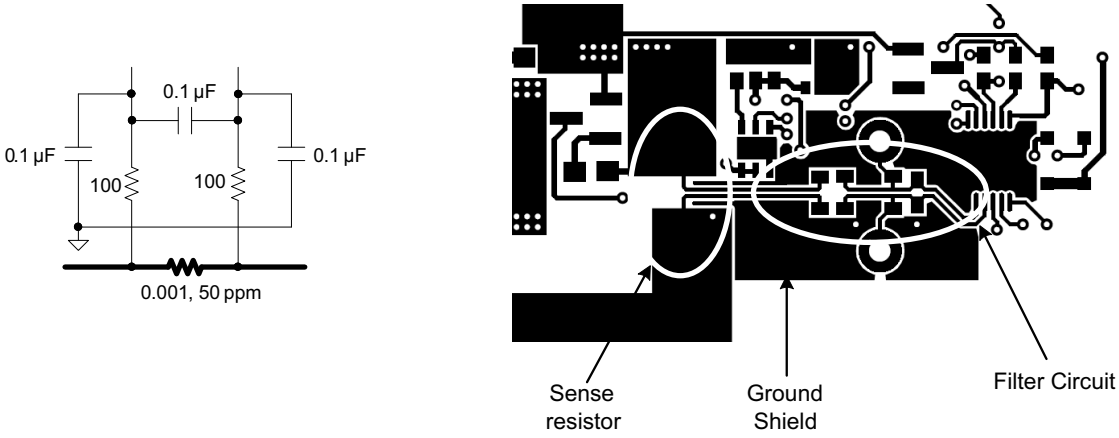

Figure 12-1. BQ28Z620 Differential Filter

- The BQ28Z620 has an internal LDO that is internally compensated and does not require an external decoupling capacitor. The PBI pin is used as a power supply backup input pin, providing power during brief transient power outages. A standard 2.2-µF ceramic capacitor is connected from the PBI pin to ground, as shown in application example.

Copyright © 2022 Texas Instruments Incorporated

- The I²C clock and data pins have integrated high-voltage ESD protection circuits; however, adding a Zener diode and series resistor provides more robust ESD performance. The I²C clock and data lines have an internal pull-down. When the gas gauge senses that both lines are low (such as during removal of the pack), the device performs auto-offset calibration and then goes into SLEEP mode to conserve power.

12.2 Layout Example

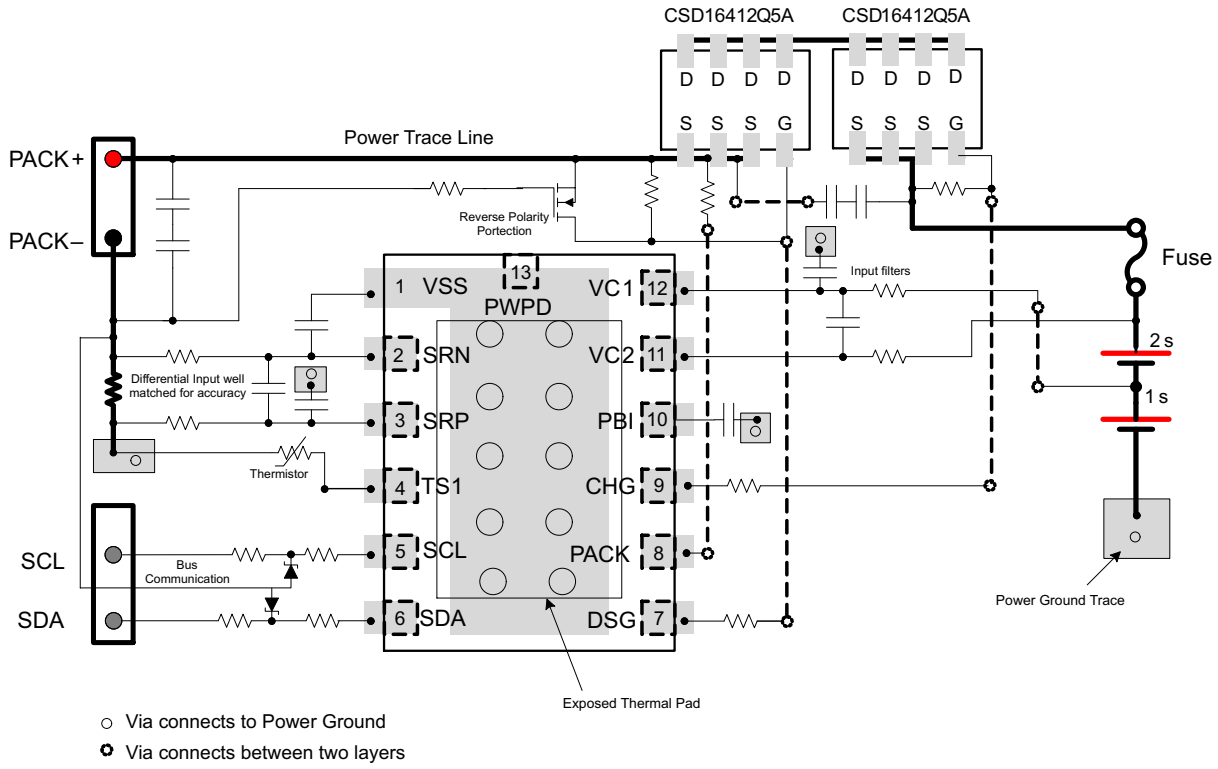

Figure 12-2. BQ28Z620 Board Layout

Copyright © 2022 Texas Instruments Incorporated

13 Device and Documentation Support

13.1 Documentation Support

- *BQ28Z620 Technical Reference Manual*
- *Theory and Implementation of Impedance Track Battery Fuel-Gauging Algorithm Application Report*

13.2 Receiving Notification of Documentation Updates

To receive notification of documentation updates, navigate to the device product folder on ti.com. Click on *Subscribe to updates* to register and receive a weekly digest of any product information that has changed. For change details, review the revision history included in any revised document.

13.3 Support Resources

TI E2E™ support forums are an engineer's go-to source for fast, verified answers and design help — straight from the experts. Search existing answers or ask your own question to get the quick design help you need.

Linked content is provided "AS IS" by the respective contributors. They do not constitute TI specifications and do not necessarily reflect TI's views; see TI's Terms of Use.

13.4 Trademarks

Impedance Track™ and TI E2E™ are trademarks of Texas Instruments.
All trademarks are the property of their respective owners.

13.5 Electrostatic Discharge Caution



This integrated circuit can be damaged by ESD. Texas Instruments recommends that all integrated circuits be handled with appropriate precautions. Failure to observe proper handling and installation procedures can cause damage.

ESD damage can range from subtle performance degradation to complete device failure. Precision integrated circuits may be more susceptible to damage because very small parametric changes could cause the device not to meet its published specifications.

13.6 Glossary

TI Glossary	This glossary lists and explains terms, acronyms, and definitions.

14 Mechanical, Packaging, and Orderable Information

The following pages include mechanical, packaging, and orderable information. This information is the most current data available for the designated devices. This data is subject to change without notice and revision of this document. For browser-based versions of this data sheet, refer to the left-hand navigation.

Copyright © 2022 Texas Instruments Incorporated

PACKAGING INFORMATION

Orderable part number	Status (1)	Material type (2)	Package | Pins	Package qty | Carrier	RoHS (3)	Lead finish/ Ball material (4)	MSL rating/ Peak reflow (5)	Op temp (°C)	Part marking (6)
BQ28Z620DRZR	Active	Production	SON (DRZ) | 12	3000 | LARGE T&R	Yes	NIPDAU	Level-2-260C-1 YEAR	-40 to 85	BQ28 Z620
BQ28Z620DRZR.A	Active	Production	SON (DRZ) | 12	3000 | LARGE T&R	Yes	NIPDAU	Level-2-260C-1 YEAR	-40 to 85	BQ28 Z620

(1) **Status:** For more details on status, see our product life cycle.

(2) **Material type:** When designated, preproduction parts are prototypes/experimental devices, and are not yet approved or released for full production. Testing and final process, including without limitation quality assurance, reliability performance testing, and/or process qualification, may not yet be complete, and this item is subject to further changes or possible discontinuation. If available for ordering, purchases will be subject to an additional waiver at checkout, and are intended for early internal evaluation purposes only. These items are sold without warranties of any kind.

(3) **RoHS values:** Yes, No, RoHS Exempt. See the TI RoHS Statement for additional information and value definition.

(4) **Lead finish/Ball material:** Parts may have multiple material finish options. Finish options are separated by a vertical ruled line. Lead finish/Ball material values may wrap to two lines if the finish value exceeds the maximum column width.

(5) **MSL rating/Peak reflow:** The moisture sensitivity level ratings and peak solder (reflow) temperatures. In the event that a part has multiple moisture sensitivity ratings, only the lowest level per JEDEC standards is shown. Refer to the shipping label for the actual reflow temperature that will be used to mount the part to the printed circuit board.

(6) **Part marking:** There may be an additional marking, which relates to the logo, the lot trace code information, or the environmental category of the part.

Multiple part markings will be inside parentheses. Only one part marking contained in parentheses and separated by a "~" will appear on a part. If a line is indented then it is a continuation of the previous line and the two combined represent the entire part marking for that device.

Important Information and Disclaimer: The information provided on this page represents TI's knowledge and belief as of the date that it is provided. TI bases its knowledge and belief on information provided by third parties, and makes no representation or warranty as to the accuracy of such information. Efforts are underway to better integrate information from third parties. TI has taken and continues to take reasonable steps to provide representative and accurate information but may not have conducted destructive testing or chemical analysis on incoming materials and chemicals. TI and TI suppliers consider certain information to be proprietary, and thus CAS numbers and other limited information may not be available for release.

In no event shall TI's liability arising out of such information exceed the total purchase price of the TI part(s) at issue in this document sold by TI to Customer on an annual basis.

TAPE AND REEL INFORMATION

REEL DIMENSIONS

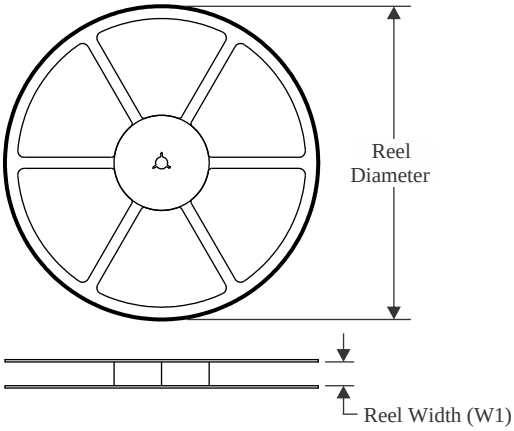

TAPE DIMENSIONS

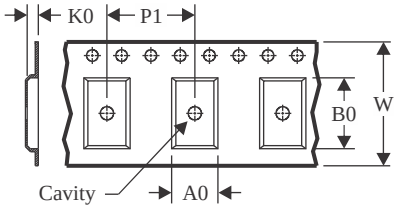

A0	Dimension designed to accommodate the component width
B0	Dimension designed to accommodate the component length
K0	Dimension designed to accommodate the component thickness
W	Overall width of the carrier tape
P1	Pitch between successive cavity centers

QUADRANT ASSIGNMENTS FOR PIN 1 ORIENTATION IN TAPE

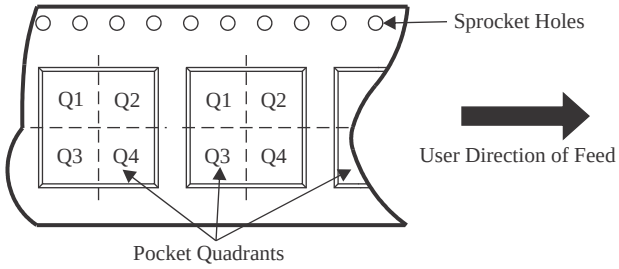

*All dimensions are nominal

Device	Package Type	Package Drawing	Pins	SPQ	Reel Diameter (mm)	Reel Width W1 (mm)	A0 (mm)	B0 (mm)	K0 (mm)	P1 (mm)	W (mm)	Pin1 Quadrant
BQ28Z620DRZR	SON	DRZ	12	3000	330.0	12.4	2.8	4.3	1.2	4.0	12.0	Q2

TAPE AND REEL BOX DIMENSIONS

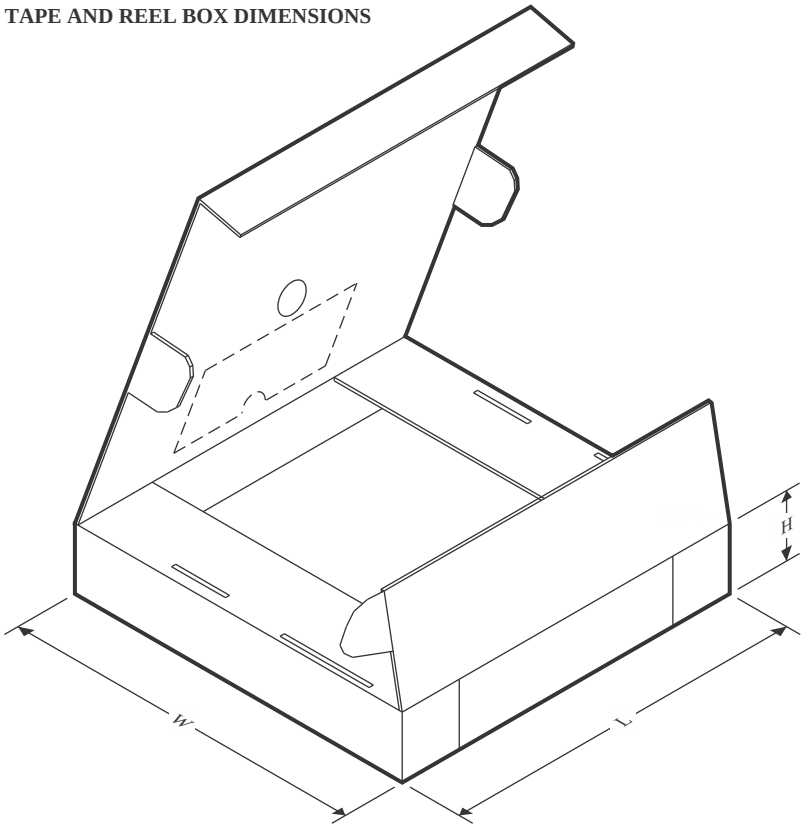

*All dimensions are nominal

Device	Package Type	Package Drawing	Pins	SPQ	Length (mm)	Width (mm)	Height (mm)
BQ28Z620DRZR	SON	DRZ	12	3000	552.0	367.0	36.0

TUBE

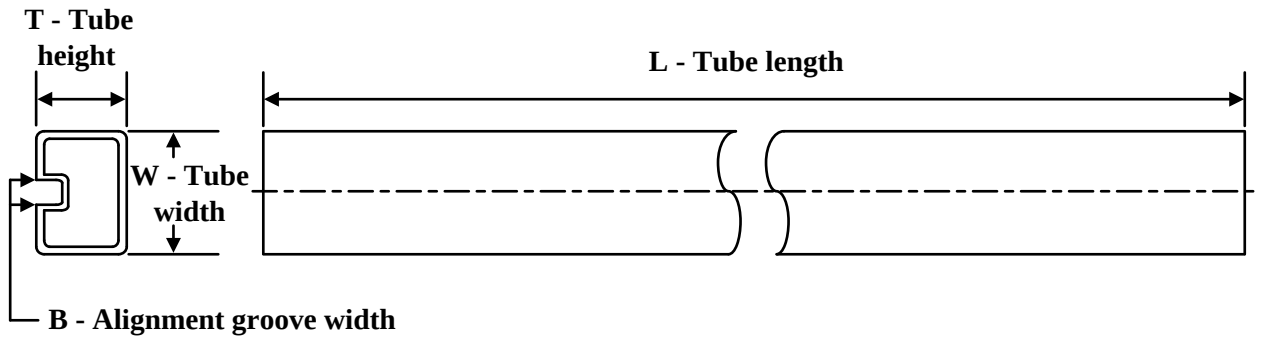

*All dimensions are nominal

Device	Package Name	Package Type	Pins	SPQ	L (mm)	W (mm)	T (µm)	B (mm)
BQ28Z620DRZR	DRZ	VSON	12	3000	381.51	4.22	2286	0
BQ28Z620DRZR.A	DRZ	VSON	12	3000	381.51	4.22	2286	0

PACKAGE OUTLINE

DRZ0012A

VSON - 1 mm max height

PLASTIC QUAD FLATPACK- NO LEAD

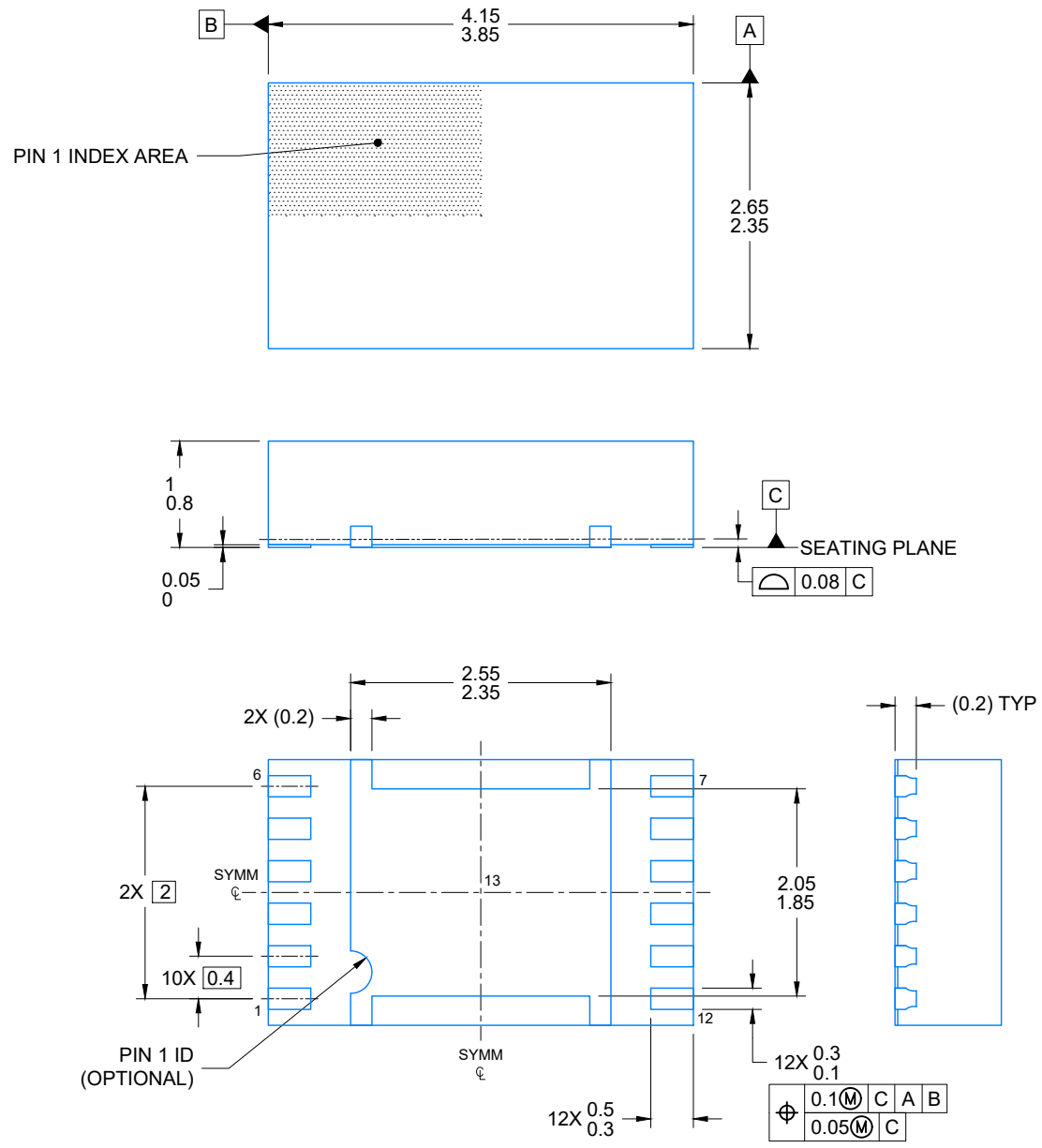

NOTES:

1. All linear dimensions are in millimeters. Any dimensions in parenthesis are for reference only. Dimensioning and tolerancing per ASME Y14.5M.
2. This drawing is subject to change without notice.
3. The package thermal pad must be soldered to the printed circuit board for optimal thermal and mechanical performance.

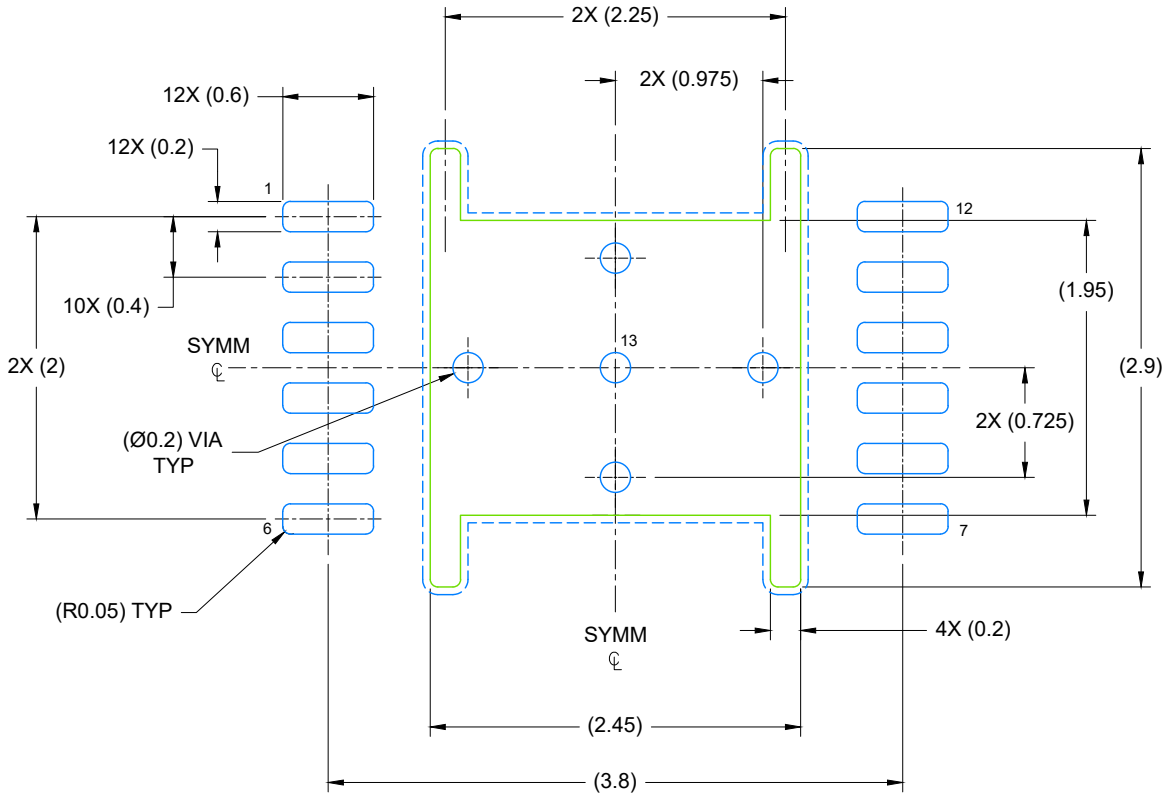

LAND PATTERN EXAMPLE
EXPOSED METAL SHOWN
SCALE: 20X

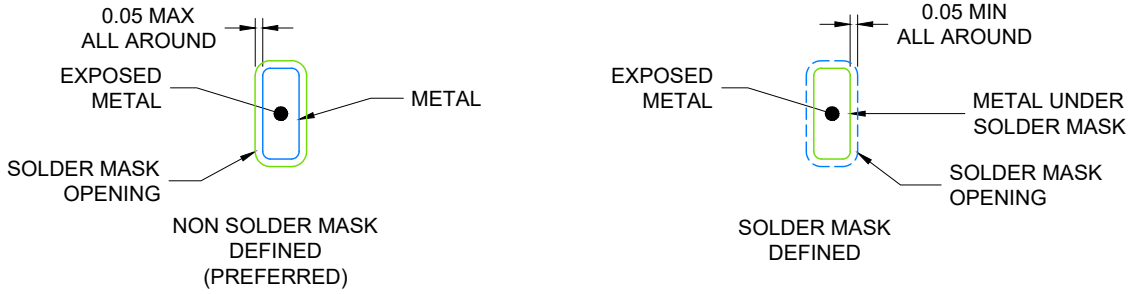

SOLDER MASK DETAILS

4218895/B 03/2022

NOTES: (continued)

4. This package is designed to be soldered to a thermal pad on the board. For more information, see Texas Instruments literature number SLUA271 (www.ti.com/lit/slua271).
5. Vias are optional depending on application, refer to device data sheet. If any vias are implemented, refer to their locations shown on this view. It is recommended that vias under paste be filled, plugged or tented.

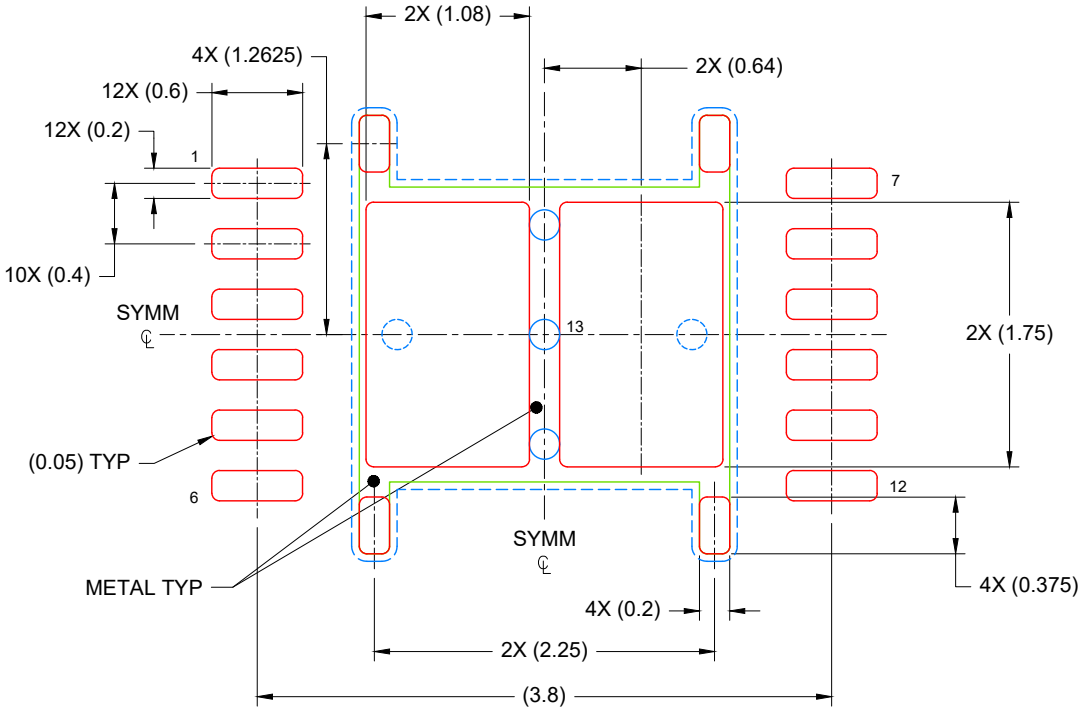

SOLDER PASTE EXAMPLE
BASED ON 0.1 mm THICK STENCIL

EXPOSED PAD
79% PRINTED COVERAGE BY AREA
SCALE: 20X

4218895/B 03/2022

NOTES: (continued)

6. Laser cutting apertures with trapezoidal walls and rounded corners may offer better paste release. IPC-7525 may have alternate design recommendations.

IMPORTANT NOTICE AND DISCLAIMER

TI PROVIDES TECHNICAL AND RELIABILITY DATA (INCLUDING DATASHEETS), DESIGN RESOURCES (INCLUDING REFERENCE DESIGNS), APPLICATION OR OTHER DESIGN ADVICE, WEB TOOLS, SAFETY INFORMATION, AND OTHER RESOURCES “AS IS” AND WITH ALL FAULTS, AND DISCLAIMS ALL WARRANTIES, EXPRESS AND IMPLIED, INCLUDING WITHOUT LIMITATION ANY IMPLIED WARRANTIES OF MERCHANTABILITY, FITNESS FOR A PARTICULAR PURPOSE OR NON-INFRINGEMENT OF THIRD PARTY INTELLECTUAL PROPERTY RIGHTS.

These resources are intended for skilled developers designing with TI products. You are solely responsible for (1) selecting the appropriate TI products for your application, (2) designing, validating and testing your application, and (3) ensuring your application meets applicable standards, and any other safety, security, regulatory or other requirements.

These resources are subject to change without notice. TI grants you permission to use these resources only for development of an application that uses the TI products described in the resource. Other reproduction and display of these resources is prohibited. No license is granted to any other TI intellectual property right or to any third party intellectual property right. TI disclaims responsibility for, and you fully indemnify TI and its representatives against any claims, damages, costs, losses, and liabilities arising out of your use of these resources.

TI’s products are provided subject to TI’s Terms of Sale, TI’s General Quality Guidelines, or other applicable terms available either on ti.com or provided in conjunction with such TI products. TI’s provision of these resources does not expand or otherwise alter TI’s applicable warranties or warranty disclaimers for TI products. Unless TI explicitly designates a product as custom or customer-specified, TI products are standard, catalog, general purpose devices.

TI objects to and rejects any additional or different terms you may propose.

Copyright © 2026, Texas Instruments Incorporated

Last updated 10/2025

ENTEGRECİ

Bu belge www.entegreci.com üzerinden sunulmaktadır.

Elektronik komponent tedarikinde Entegreci

Entegreci, Eskişehir merkezli, Türkiye geneline satış yapan bir elektronik komponent mağazasıdır. Entegreler (IC), mikrodenetleyiciler, transistörler, diyotlar, pasif elemanlar, konnektörler, modüller ve geliştirme kartları tek adetten seri üretim adetlerine kadar satılır. Ürün sayfalarında güncel stok durumunu, fiyatı ve datasheet bağlantısını bulabilirsiniz.

Parça koduyla arama

Üretici parça numarasını yazın; stok ve fiyatı hemen görün.

www.entegreci.com

Ürün kategorileri

Entegreden kapasitöre tüm elektronik komponent kategorileri.

Kategorilere göz atın

Üreticiler

Aradığınız üreticinin ürünlerini tek sayfada inceleyin.

Üreticileri görün

Toplu alım ve teklif

Listede olmayan ya da yüksek adetli parçalar için teklif isteyin.

Teklif isteyin

www.entegreci.com | **destek@entegreci.com** | **0850 305 90 34**

Entegreci is an online electronic components store based in Türkiye. Search by manufacturer part number to see stock, prices and datasheets for integrated circuits, microcontrollers, transistors, passive components and connectors, or request a quote for parts that are not listed.

Bu sayfa Entegreci tarafından eklenmiştir. Belgenin önceki sayfaları asıl yayıncısına aittir ve içeriği değiştirilmemiştir; en güncel sürüm için belgenin yayıncısına başvurun.