BQ25980 I²C Controlled, 2-Cell, 8-A Switched Cap Parallel Battery Charger with Integrated Protection and Dual-Input Selector

1 Features

- 98.6% peak efficiency switched cap parallel charger supporting 2-cell battery and 8-A fast charge
- Patent pending dual phase switched cap architecture optimized for highest efficiency
  - Input voltage is 2x battery voltage (7.0V to 9.54V)
  - Output current is 2x of input current (up to 4.75A)
  - Reduces power loss across input cable
- Integrated 7-A bypass mode fast charge
  - 13mΩ charging path resistance for high current operation
- Dual-input power mux controller for source selection
- Support wide range of input voltage
  - Up to 22-V operational input voltage
  - Maximum 40-V input voltage with optional external ACFET and 28-V without external ACFET
- Parallel charging with synchronized dual BQ25980 operations for up-to 12-A charging current
- Integrated programmable protection features for safe operation
  - Input over-voltage protection (BUSOVP) and battery over-voltage protection (BATOVP)
  - Input over-current protection (BUSOCP) and battery over-current protection (BATOCP)
  - Output over-voltage protection (VOUTOVP)
  - Input under-current protection (BUSUCP) and input reverse-current protection (BUSRCP) to detect adapter unplug and prevent boost-back
  - Input short-circuit protection (BUSSCP)
  - Battery and connector temperature monitoring (TSBAT_FLT and TSBUS_FLT)
  - Junction over-temperature protection (TDIE_FLT)
  - Optional input over-voltage protection with external ACFET up to 40V
- Programmable settings for system optimization
  - Interrupts and interrupt masks
  - ADC readings and configuration
- Integrated 16-bit ADC for voltage, current and temperature monitoring

2 Applications

- Smartphone, Tablet, Non-military Drone
- Chromebook, Notebook

3 Description

The BQ25980 is a 98.6% peak efficiency, 8-A battery charging solution using dual-phase switched cap architecture for 2-cell Li-ion battery. The switched cap architecture allows the cable current to be half the charging current, reducing the cable power loss and limiting temperature rise. The dual-phase architecture increases charging efficiency and reduces the input and output cap requirements. When used with a main charger such as BQ25790, the system enables the fast charging at the very low power loss from pre-charge through constant current (CC), constant voltage (CV), and termination.

The BQ25980 also supports 7-A bypass mode charge (previously called battery switch charge) through internal MOSFETs. The R_{dson} in bypass mode charging path is less than 13mΩ for high current operation. The integrated bypass mode allows backward compatibility of 10-V fast charging adapter to charge 2-cell battery.

The device supports dual input configuration through integrated mux control and driver for external N-FETs. It also allows single input with no external N-FET or single N-FET.

Device Information

PART NUMBER(1)	PACKAGE	BODY SIZE (NOM)
BQ25980	DSBGA (80)	3.2 mm x 4.1 mm

(1) For all available packages, see the orderable addendum at the end of the data sheet.

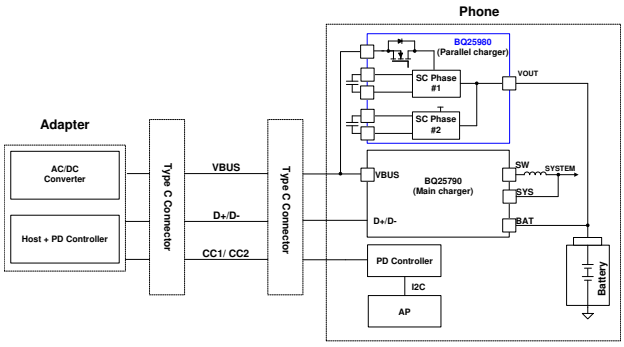

Simplified Schematic

An IMPORTANT NOTICE at the end of this data sheet addresses availability, warranty, changes, use in safety-critical applications, intellectual property matters and other important disclaimers. PRODUCTION DATA.

4 Description (continued)

The device integrates all the necessary protection features to support safe charging, including input over-voltage and over-current protection, output over-voltage and over-current protection, input under-current and reverse-current protection, input short circuit protection, temperature sensing for the battery and cable, and junction over-temperature protection in both switched cap and bypass mode.

The device includes a 16-bit analog-to-digital converter (ADC) to provide VAC voltage, bus voltage, bus current, output voltage, battery voltage, battery current, input connector temperature, battery temperature, junction temperature, and other calculated measurements needed to manage the charging of the battery from the adapter, or wireless input, or power bank.

Copyright © 2020 Texas Instruments Incorporated

5 Device and Documentation Support

5.1 Device Support

5.1.1 Third-Party Products Disclaimer

TI'S PUBLICATION OF INFORMATION REGARDING THIRD-PARTY PRODUCTS OR SERVICES DOES NOT CONSTITUTE AN ENDORSEMENT REGARDING THE SUITABILITY OF SUCH PRODUCTS OR SERVICES OR A WARRANTY, REPRESENTATION OR ENDORSEMENT OF SUCH PRODUCTS OR SERVICES, EITHER ALONE OR IN COMBINATION WITH ANY TI PRODUCT OR SERVICE.

5.2 Receiving Notification of Documentation Updates

To receive notification of documentation updates, navigate to the device product folder on ti.com. Click on *Subscribe to updates* to register and receive a weekly digest of any product information that has changed. For change details, review the revision history included in any revised document.

5.3 Support Resources

TI E2E™ support forums are an engineer's go-to source for fast, verified answers and design help — straight from the experts. Search existing answers or ask your own question to get the quick design help you need.

Linked content is provided "AS IS" by the respective contributors. They do not constitute TI specifications and do not necessarily reflect TI's views; see TI's Terms of Use.

5.4 Trademarks

TI E2E™ is a trademark of Texas Instruments.
All other trademarks are the property of their respective owners.

5.5 Electrostatic Discharge Caution



This integrated circuit can be damaged by ESD. Texas Instruments recommends that all integrated circuits be handled with appropriate precautions. Failure to observe proper handling and installation procedures can cause damage.

ESD damage can range from subtle performance degradation to complete device failure. Precision integrated circuits may be more susceptible to damage because very small parametric changes could cause the device not to meet its published specifications.

5.6 Glossary

TI Glossary This glossary lists and explains terms, acronyms, and definitions.

6 Mechanical, Packaging, and Orderable Information

The following pages include mechanical, packaging, and orderable information. This information is the most current data available for the designated devices. This data is subject to change without notice and revision of this document. For browser-based versions of this data sheet, refer to the left-hand navigation.

Copyright © 2020 Texas Instruments Incorporated

PACKAGING INFORMATION

Orderable part number	Status (1)	Material type (2)	Package | Pins	Package qty | Carrier	RoHS (3)	Lead finish/ Ball material (4)	MSL rating/ Peak reflow (5)	Op temp (°C)	Part marking (6)
BQ25980YFFR	Active	Production	DSBGA (YFF) | 80	3000 | LARGE T&R	Yes	SNAGCU	Level-1-260C-UNLIM	-40 to 85	BQ25980
BQ25980YFFR.A	Active	Production	DSBGA (YFF) | 80	3000 | LARGE T&R	Yes	SNAGCU	Level-1-260C-UNLIM	-40 to 85	BQ25980
BQ25980YFFR.B	Active	Production	DSBGA (YFF) | 80	3000 | LARGE T&R	Yes	SNAGCU	Level-1-260C-UNLIM	-40 to 85	BQ25980

(1) **Status:** For more details on status, see our product life cycle.

(2) **Material type:** When designated, preproduction parts are prototypes/experimental devices, and are not yet approved or released for full production. Testing and final process, including without limitation quality assurance, reliability performance testing, and/or process qualification, may not yet be complete, and this item is subject to further changes or possible discontinuation. If available for ordering, purchases will be subject to an additional waiver at checkout, and are intended for early internal evaluation purposes only. These items are sold without warranties of any kind.

(3) **RoHS values:** Yes, No, RoHS Exempt. See the TI RoHS Statement for additional information and value definition.

(4) **Lead finish/Ball material:** Parts may have multiple material finish options. Finish options are separated by a vertical ruled line. Lead finish/Ball material values may wrap to two lines if the finish value exceeds the maximum column width.

(5) **MSL rating/Peak reflow:** The moisture sensitivity level ratings and peak solder (reflow) temperatures. In the event that a part has multiple moisture sensitivity ratings, only the lowest level per JEDEC standards is shown. Refer to the shipping label for the actual reflow temperature that will be used to mount the part to the printed circuit board.

(6) **Part marking:** There may be an additional marking, which relates to the logo, the lot trace code information, or the environmental category of the part.

Multiple part markings will be inside parentheses. Only one part marking contained in parentheses and separated by a "~" will appear on a part. If a line is indented then it is a continuation of the previous line and the two combined represent the entire part marking for that device.

Important Information and Disclaimer: The information provided on this page represents TI's knowledge and belief as of the date that it is provided. TI bases its knowledge and belief on information provided by third parties, and makes no representation or warranty as to the accuracy of such information. Efforts are underway to better integrate information from third parties. TI has taken and continues to take reasonable steps to provide representative and accurate information but may not have conducted destructive testing or chemical analysis on incoming materials and chemicals. TI and TI suppliers consider certain information to be proprietary, and thus CAS numbers and other limited information may not be available for release.

In no event shall TI's liability arising out of such information exceed the total purchase price of the TI part(s) at issue in this document sold by TI to Customer on an annual basis.

TAPE AND REEL INFORMATION

REEL DIMENSIONS

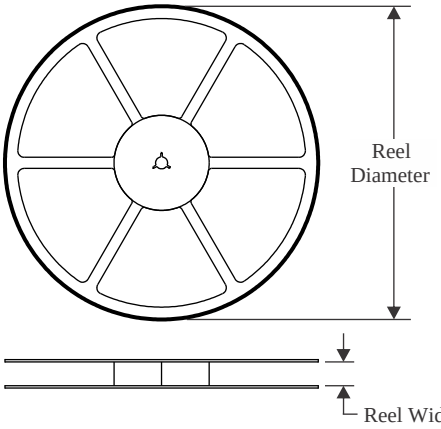

TAPE DIMENSIONS

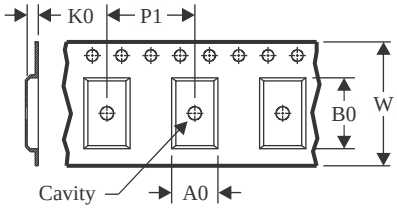

A0	Dimension designed to accommodate the component width
B0	Dimension designed to accommodate the component length
K0	Dimension designed to accommodate the component thickness
W	Overall width of the carrier tape
P1	Pitch between successive cavity centers

QUADRANT ASSIGNMENTS FOR PIN 1 ORIENTATION IN TAPE

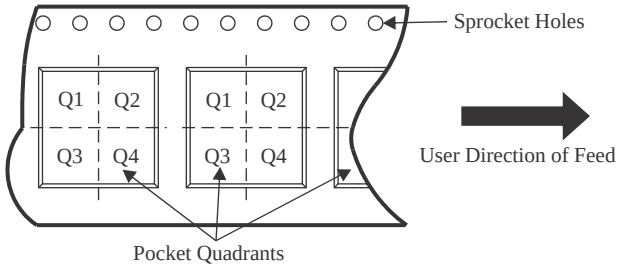

*All dimensions are nominal

Device	Package Type	Package Drawing	Pins	SPQ	Reel Diameter (mm)	Reel Width W1 (mm)	A0 (mm)	B0 (mm)	K0 (mm)	P1 (mm)	W (mm)	Pin1 Quadrant
BQ25980YFFR	DSBGA	YFF	80	3000	330.0	12.4	3.4	4.27	0.7	8.0	12.0	Q1
BQ25980YFFR	DSBGA	YFF	80	3000	330.0	12.4	3.4	4.27	0.7	8.0	12.0	Q1

TAPE AND REEL BOX DIMENSIONS

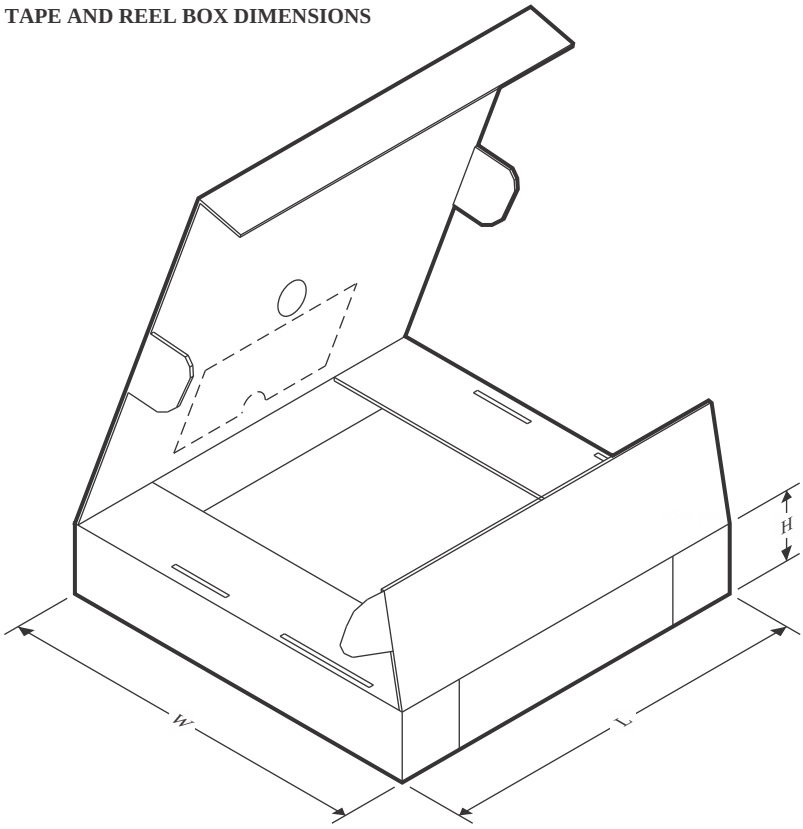

*All dimensions are nominal

Device	Package Type	Package Drawing	Pins	SPQ	Length (mm)	Width (mm)	Height (mm)
BQ25980YFFR	DSBGA	YFF	80	3000	335.0	335.0	25.0
BQ25980YFFR	DSBGA	YFF	80	3000	360.0	360.0	36.0

PACKAGE OUTLINE

YFF0080

DSBGA - 0.625 mm max height

DIE SIZE BALL GRID ARRAY

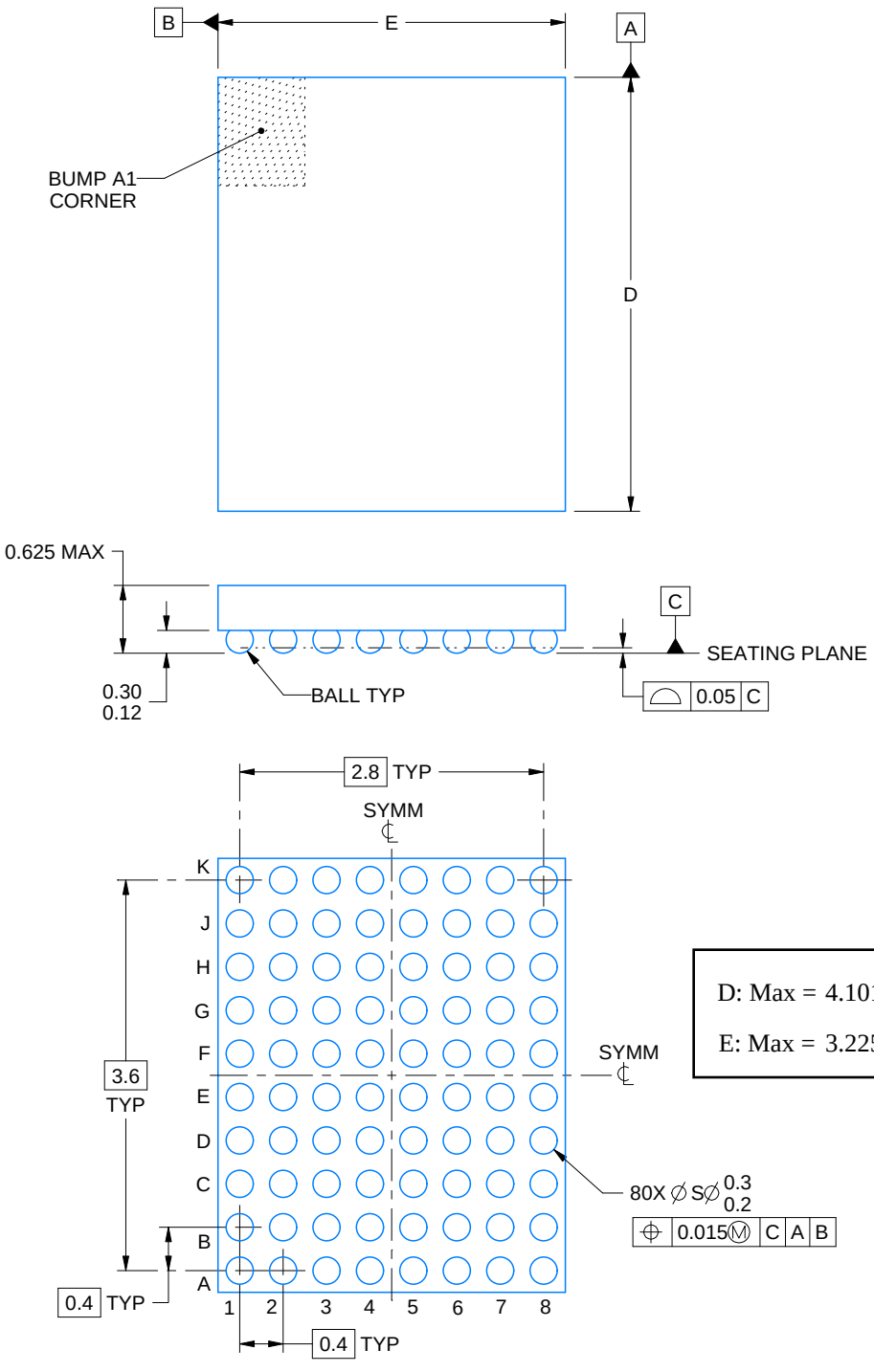

NOTES:

1. All linear dimensions are in millimeters. Any dimensions in parenthesis are for reference only. Dimensioning and tolerancing per ASME Y14.5M.
2. This drawing is subject to change without notice.

EXAMPLE BOARD LAYOUT

YFF0080

DSBGA - 0.625 mm max height

DIE SIZE BALL GRID ARRAY

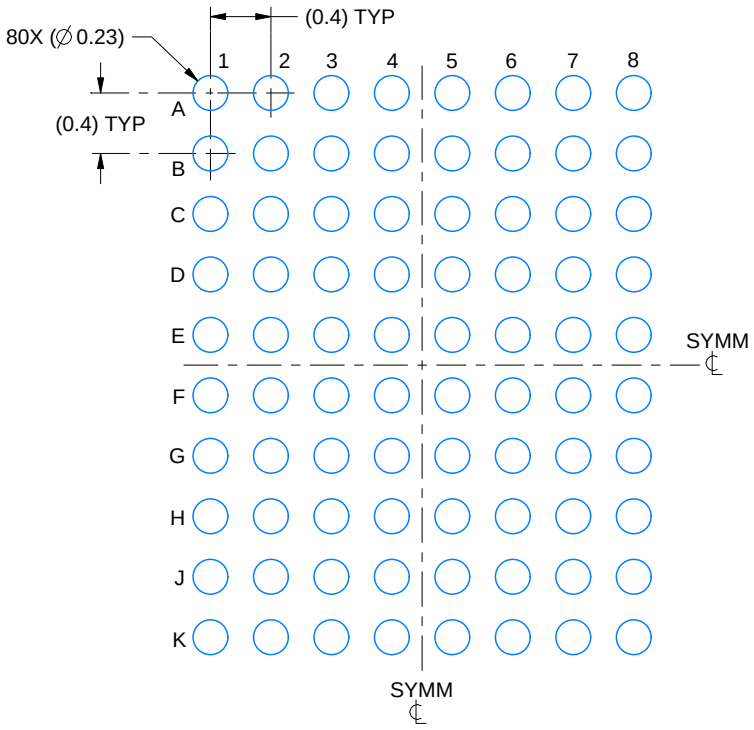

LAND PATTERN EXAMPLE
SCALE:20X

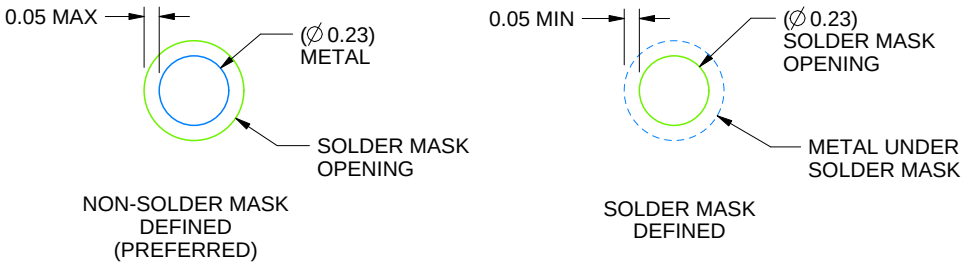

SOLDER MASK DETAILS
NOT TO SCALE

4223281/A 09/2016

NOTES: (continued)

3. Final dimensions may vary due to manufacturing tolerance considerations and also routing constraints.
   For more information, see Texas Instruments literature number SNVA009 (www.ti.com/lit/snva009).

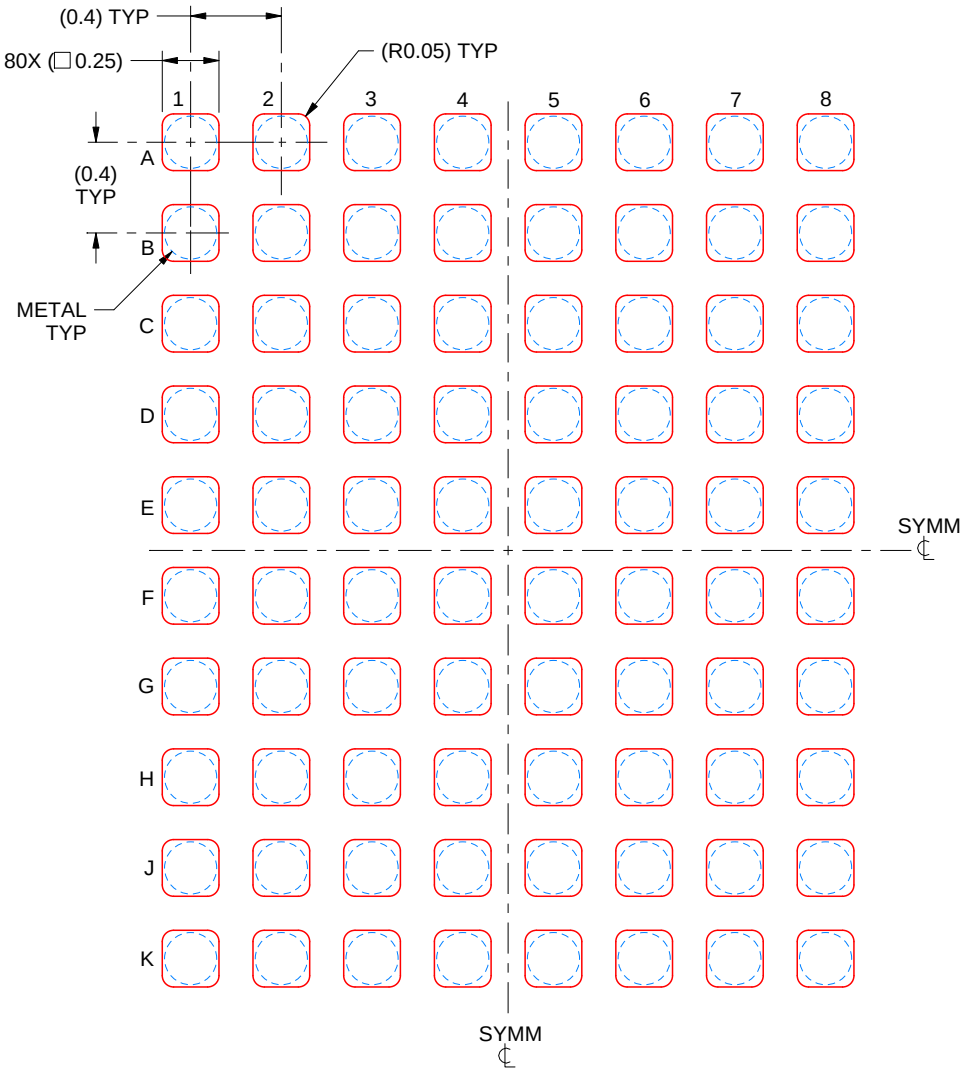

SOLDER PASTE EXAMPLE
BASED ON 0.1 mm THICK STENCIL
SCALE:30X

4223281/A 09/2016

NOTES: (continued)

4. Laser cutting apertures with trapezoidal walls and rounded corners may offer better paste release.

IMPORTANT NOTICE AND DISCLAIMER

TI PROVIDES TECHNICAL AND RELIABILITY DATA (INCLUDING DATASHEETS), DESIGN RESOURCES (INCLUDING REFERENCE DESIGNS), APPLICATION OR OTHER DESIGN ADVICE, WEB TOOLS, SAFETY INFORMATION, AND OTHER RESOURCES “AS IS” AND WITH ALL FAULTS, AND DISCLAIMS ALL WARRANTIES, EXPRESS AND IMPLIED, INCLUDING WITHOUT LIMITATION ANY IMPLIED WARRANTIES OF MERCHANTABILITY, FITNESS FOR A PARTICULAR PURPOSE OR NON-INFRINGEMENT OF THIRD PARTY INTELLECTUAL PROPERTY RIGHTS.

These resources are intended for skilled developers designing with TI products. You are solely responsible for (1) selecting the appropriate TI products for your application, (2) designing, validating and testing your application, and (3) ensuring your application meets applicable standards, and any other safety, security, regulatory or other requirements.

These resources are subject to change without notice. TI grants you permission to use these resources only for development of an application that uses the TI products described in the resource. Other reproduction and display of these resources is prohibited. No license is granted to any other TI intellectual property right or to any third party intellectual property right. TI disclaims responsibility for, and you fully indemnify TI and its representatives against any claims, damages, costs, losses, and liabilities arising out of your use of these resources.

TI’s products are provided subject to TI’s Terms of Sale, TI’s General Quality Guidelines, or other applicable terms available either on ti.com or provided in conjunction with such TI products. TI’s provision of these resources does not expand or otherwise alter TI’s applicable warranties or warranty disclaimers for TI products. Unless TI explicitly designates a product as custom or customer-specified, TI products are standard, catalog, general purpose devices.

TI objects to and rejects any additional or different terms you may propose.

Copyright © 2025, Texas Instruments Incorporated

Last updated 10/2025

ENTEGRECİ

Bu belge www.entegreci.com üzerinden sunulmaktadır.

Elektronik komponent tedarikinde Entegreci

Entegreci, Eskişehir merkezli, Türkiye geneline satış yapan bir elektronik komponent mağazasıdır. Entegreler (IC), mikrodenetleyiciler, transistörler, diyotlar, pasif elemanlar, konnektörler, modüller ve geliştirme kartları tek adetten seri üretim adetlerine kadar satılır. Ürün sayfalarında güncel stok durumunu, fiyatı ve datasheet bağlantısını bulabilirsiniz.

Parça koduyla arama

Üretici parça numarasını yazın; stok ve fiyatı hemen görün.

www.entegreci.com

Ürün kategorileri

Entegreden kapasitöre tüm elektronik komponent kategorileri.

Kategorilere göz atın

Üreticiler

Aradığınız üreticinin ürünlerini tek sayfada inceleyin.

Üreticileri görün

Toplu alım ve teklif

Listede olmayan ya da yüksek adetli parçalar için teklif isteyin.

Teklif isteyin

www.entegreci.com | **destek@entegreci.com** | **0850 305 90 34**

Entegreci is an online electronic components store based in Türkiye. Search by manufacturer part number to see stock, prices and datasheets for integrated circuits, microcontrollers, transistors, passive components and connectors, or request a quote for parts that are not listed.

Bu sayfa Entegreci tarafından eklenmiştir. Belgenin önceki sayfaları asıl yayıncısına aittir ve içeriği değiştirilmemiştir; en güncel sürüm için belgenin yayıncısına başvurun.