BQ25308 Standalone 1-Cell, 17V, 3.0A Battery Charger with Dead Battery Charge Inhibit

1 Features

- Standalone charger and easy to configure
- High-efficiency, 1.2MHz, synchronous switch-mode buck charger
  - 92.5% charge efficiency at 2A from 5V input for 1-cell battery
  - 91.8% charge efficiency at 2A from 9V input for 1-cell battery
- Single input to support USB input and high voltage adaptors
  - Supports 4.1V - 17V input voltage range with 28V absolute maximum input voltage rating
  - Input Voltage Dynamic Power Management (VINDPM) tracking battery voltage
- High integration
  - Integrated reverse blocking and synchronous switching MOSFET
  - Internal input and charge current sense
  - Internal loop compensation
  - Integrated bootstrap diode
- 3.6V / 4.05V / 4.15V / 4.2V charge voltage
- 3.0A maximum fast charge current
- 200nA low battery leakage current at 4.5V V_{BAT}
- 4.25µA VBUS supply current in IC disable mode
- Charge current thermal regulation at 120°C
- Precharge current: 10% of fast charge current
- Termination current: 10% of fast charge current
- Charge accuracy
  - ±0.5% charge voltage regulation
  - ±10% charge current regulation
- Safety
  - Disable charge for dead battery condition
  - Thermal regulation and thermal shutdown
  - Input Under-Voltage Lockout (UVLO) and Over-Voltage Protection (OVP)
  - Battery overcharge protection
  - Safety timer for precharge and fast charge
  - Charge disabled if current setting pin ICHG is open or short
  - Cold/hot battery temperature protection
  - Fault report on STAT pin
- Available in a WQFN 3x3-16 package

2 Applications

- Wireless speaker
- Barcode scanner
- Gaming
- Cradle charger
- Cordless power tool
- Building automation
- Medical

3 Description

The BQ25308 is a highly-integrated standalone switch-mode battery charger for 1-cell Li-ion, Li-polymer, and LiFePO4 batteries. The BQ25308 supports 4.1V to 17V input voltage and 3A fast charge current. The integrated current sensing topology of the device enables high charge efficiency and low BOM cost. The best-in-class 200nA low quiescent current of the device conserves battery energy and maximizes the shelf time for portable devices. The BQ25308 is available in a 3x3 WQFN package for easy 2-layer layout and space limited applications.

Package Information

PART NUMBER(3)	PACKAGE(1)	PACKAGE SIZE(2)	BODY SIZE (NOM)
BQ25308	RTE (WQFN-16)	3.0mm × 3.0mm	3.0mm × 3.0mm

(1) For all available packages, see Section 14.
(2) The package size (length × width) is a nominal value and includes pins, where applicable.
(3) See the Device Comparison Table

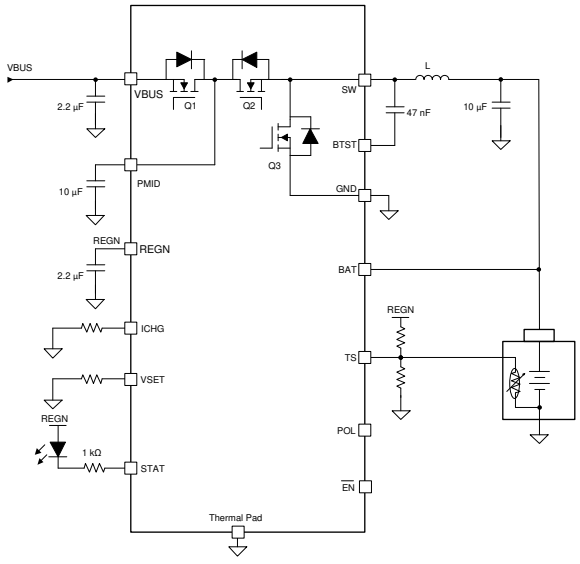

Simplified Application

Table of Contents

1 Features....1
2 Applications....1
3 Description....1
4 Description (continued)....3
5 Device Comparison Table....4
6 Pin Configuration and Functions....5
7 Specifications....7
7.1 Absolute Maximum Ratings....7
7.2 ESD Ratings....7
7.3 Recommended Operating Conditions....7
7.4 Thermal Information....8
7.5 Electrical Characteristics....8
7.6 Timing Requirements....11
7.7 Typical Characteristics....12
8 Detailed Description....13
8.1 Overview....13
8.2 Functional Block Diagram....14
8.3 Feature Description....15
8.4 Device Functional Modes....20
9 Application and Implementation....21
9.1 Application Information....21
9.2 Typical Applications....21
10 Power Supply Recommendations....27
11 Layout....28
11.1 Layout Guidelines....28
11.2 Layout Example....28
12 Device and Documentation Support....30
12.1 Device Support....30
12.2 Receiving Notification of Documentation Updates....30
12.3 Support Resources....30
12.4 Trademarks....30
12.5 Electrostatic Discharge Caution....30
12.6 Glossary....30
13 Revision History....30
14 Mechanical, Packaging, and Orderable Information....31

Copyright © 2024 Texas Instruments Incorporated

4 Description (continued)

The BQ25308 supports a 4.1V to 17V input to charge single cell batteries. The BQ25308 provides up to 3A continuous charge current to a single cell 1S battery. The device features fast charging for portable devices. Its input voltage regulation delivers maximum charging power to the battery from the input source. The solution is highly integrated with an input reverse-blocking FET (RBFET, Q1), high-side switching FET (HSFET, Q2), and low-side switching FET (LSFET, Q3). The device also provides a safety feature that completely inhibits charging of a dead battery.

The BQ25308 features lossless integrated current sensing to reduce power loss and BOM cost with minimized component count. It also integrates a bootstrap diode for the high-side gate drive and battery temperature monitor to simplify system design. The device initiates and completes a charging cycle without host control. The BQ25308 charge voltage and charge current are set by external resistors. The BQ25308 detects the charge voltage setting at startup and charges the battery in four phases: battery short, pre-conditioning, constant current, and constant voltage. At the end of the charging cycle, the charger automatically terminates if the charge current is below the termination current threshold and the battery voltage is above the recharge threshold. When the battery voltage falls below the recharge threshold, the charger will automatically start another charging cycle. The charger provides various safety features for battery charging and system operations, including battery temperature monitoring based on negative temperature coefficient (NTC) thermistor, charge safety timer, input over-voltage and over-current protections, as well as battery over-voltage protection. Pin open and short protection is also built in to protect against the charge current setting pin ICHG accidently open or short to GND. The thermal regulation regulates charge current to limit die temperature during high power operation or high ambient temperature conditions.

The STAT pin output reports charging status and fault conditions. When the input voltage is removed, the device automatically enters HiZ mode with very low leakage current from battery to the charger device. The BQ25308 is available in a 3mm x 3mm thin WQFN package.

Copyright © 2024 Texas Instruments Incorporated

5 Device Comparison Table

	BQ25300	BQ25302	BQ25303J	BQ25306	BQ25308
Battery Cells in Series	1	1	1	1, 2	1
Input Operation Voltage	4.1V to 17V	4.1V to 6.2V	4.1V to 17V	4.1V to 17V	4.1V to 17V
Charge Voltage	3.6V, 4.15V, 4.2V, 4.05V	4.1V, 4.35V, 4.4V, 4.2V	4.1V, 4.35V, 4.4V, 4.2V	programmable from 3.4V to 9.0V	3.6V, 4.15V, 4.2V, 4.05V
Maximum Fast Charge Current ICHG	3.0A	2.0A	3.0A	3.0A	3.0A
Battery Temperature Protection (JEITA or Cold/Hot)	Cold/Hot	Cold/Hot	JEITA	Cold/Hot	Cold/Hot
Dead Battery Charge Inhibit	No	No	No	No	Yes

Copyright © 2024 Texas Instruments Incorporated

6 Pin Configuration and Functions

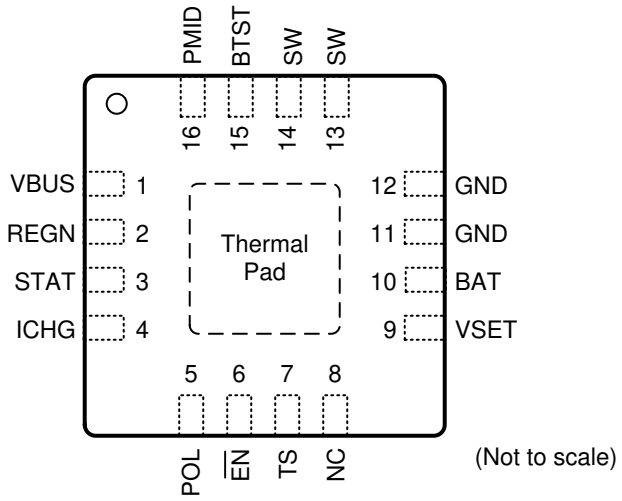

Figure 6-1. RTE Package 16-Pin WQFN Top View

Table 6-1. Pin Functions

PIN		I/O[1]	DESCRIPTION
NAME	NO.		
VBUS	1	P	Charger input voltage. The internal n-channel reverse block MOSFET (RBFET) is connected between VBUS and PMID with VBUS on source. Place a 2.2uF ceramic capacitor from VBUS to GND and place it as close as possible to IC.
PMID	16	P	Connected to the drain of the reverse blocking MOSFET (RBFET) and the drain of high-side MOSFET (HSFET). Place ceramic 10µF on PMID to GND and place it as close as possible to IC.
SW	13,14	P	Switching node. Connected to output inductor. Internally SW is connected to the source of the n-channel HSFET and the drain of the n-channel LSFET. Connect the 0.047µF bootstrap capacitor from SW to BTST.
BTST	15	P	High-side FET driver supply. Internally, the BTST is connected to the cathode of the internal boost-strap diode. Connect the 0.047µF bootstrap capacitor from SW to BTST.
GND	11,12	P	Ground. Connected directly to thermal pad on the top layer. A single point connection is recommended between power ground and analog ground near the IC GND pins.
REGN	2	P	Low-side FET driver positive supply output. Connect a 2.2µF ceramic capacitor from REGN to GND. The capacitor should be placed close to the IC.
BAT	10	AI	Battery voltage sensing input. Connect this pin to the positive terminal of the battery pack and the node of inductor output terminal. 10-µF capacitor is recommended to connect to this pin.
TS	7	AI	Battery temperature voltage input. Connect a negative temperature coefficient thermistor (NTC). Program temperature window with a resistor divider from REGN to TS and TS to GND. Charge suspends when TS pin voltage is out of range. When TS pin is not used, connect a 10-kΩ resistor from REGN to TS and a 10-kΩ resistor from TS to GND. It is recommended to use a 103AT-2 thermistor.
ICHG	4	AI	Charge current program input. Connect a 1% resistor RICHG from this pin to ground to program the charge current as ICHG = K_{ICHG} / R_{ICHG} (K_{ICHG} = 40,000). No capacitor is allowed to connect at this pin. When the ICHG pin is pulled to ground or left open, the charger stops switching and the STAT pin starts blinking.
STAT	3	AO	Charge status indication output. This pin is an open drain output. Connect this pin to REGN via a current limiting resistor and LED. The STAT pin indicates charger status as: • Charge in progress: STAT pin is pulled LOW • Charge completed, charge disabled by $\overline{EN}$: STAT pin is OPEN • Fault conditions: STAT pin blinks
VSET	9	AI	Charge voltage setting input. VSET pin sets battery charge voltage. Program battery regulation voltage with a resistor pull-down from VSET to GND as: • Floating (R > 200kΩ±10%): 3.6V • Shorted to GND (R < 510Ω): 4.05V • R = 51kΩ ± 10%: 4.15V • R = 10kΩ ± 10%: 4.2V The maximum allowed capacitance on this pin is 50pF.

Copyright © 2024 Texas Instruments Incorporated

Table 6-1. Pin Functions (continued)

PIN		I/O[1]	DESCRIPTION
NAME	NO.		
POL	5	AI	$\overline{EN}$ pin polarity selection.
$\overline{EN}$	6	AI	Device disable input. With the POL pin floating, the device is enabled with the $\overline{EN}$ pin floating or pulled low, and the device is disabled if the $\overline{EN}$ pin is pulled high. With POL pin grounded, the device is enabled with the $\overline{EN}$ pin pulled high, and the device is disabled with the $\overline{EN}$ pin pulled low or floating.
NC	8	-	No connection. Keep this pin floating or grounded.
Thermal Pad	17	-	Ground reference for the device that is also the thermal pad used to conduct heat from the device. This connection serves two purposes. The first purpose is to provide an electrical ground connection for the device. The second purpose is to provide a low thermal-impedance path from the device die to the PCB. This pad should be tied externally to a ground plane. Ground layer(s) are connected to the thermal pad through vias under the thermal pad.

(1) AI = Analog Input, AO = Analog Output, AIO = Analog Input Output, DI = Digital Input, DO = Digital Output, DIO = Digital Input Output, P = Power

Copyright © 2024 Texas Instruments Incorporated

7 Specifications

7.1 Absolute Maximum Ratings

Over operating free-air temperature range (unless otherwise noted)(1)

PARAMETER		MIN	MAX	UNIT
Voltage Range (with respect to GND)	VBUS (converter not switching)	–2	28	V
	PMID(converter not switching)	–0.3	28	V
	SW	–2(3)	20	V
	BTST	–0.3	25.5	V
	BAT	–0.3	11	V
	ICHG, REGN, TS, STAT, POL, /EN	–0.3	5.5	V
Voltage Range (with respect to GND)	VSET	–0.3	11(2)	V
Voltage Range	BTST to SW	–0.3	5.5	V
Output Sink Current	STAT		6	mA
Output Sink Current	REGN		16	mA
Junction temperature	T_J	–40	150	ºC
Storage temperature	T_{stg}	–65	150	ºC

(1) Stresses beyond those listed under *Absolute Maximum Rating* may cause permanent damage to the device. These are stress ratings only, which do not imply functional operation of the device at these or any other conditions beyond those indicated under *Recommended Operating Condition*. Exposure to absolute-maximum-rated conditions for extended periods may affect device reliability.
(2) The absolute maximum rating is specified at 11V DC voltage and up to 13V for a maximum 100us
(3) -3V for 10ns transient

7.2 ESD Ratings

			VALUE	UNIT
$V_{(ESD)}$	Electrostatic discharge	Human body model (HBM), per ANSI/ESDA/ JEDEC JS-001, all pins(1)	±2000	V
		Charged device model (CDM), per JEDEC specification JESD22-C101, all pins(2)	±250	

(1) JEDEC document JEP155 states that 500-V HBM allows safe manufacturing with a standard ESD control process.
(2) JEDEC document JEP157 states that 250-V CDM allows safe manufacturing with a standard ESD control process.

7.3 Recommended Operating Conditions

over operating free-air temperature range (unless otherwise noted)

PARAMETER		MIN	NOM	MAX	UNIT
V_{VBUS}	Input voltage	4.1		17	V
V_{BAT}	Battery voltage			4.2	V
I_{VBUS}	Input current			3	A
I_{SW}	Output current (SW)			3	A
T_A	Ambient temperature	–40		85	°C
L	Recommended inductance at V_{VBUS_MAX} < 6.2V		1.0		µH
L	Recommended inductance at V_{VBUS_MAX} > 6.2V		2.2		µH
C_{VBUS}	Recommended capacitance at VBUS		2.2		µF
C_{PMID}	Recommended capacitance at PMID		10		µF
C_{BAT}	Recommended capacitance at BAT		10		µF

Copyright © 2024 Texas Instruments Incorporated

7.4 Thermal Information

THERMAL METRIC[1]		BQ25308 RTE 16-PINS	UNIT
$R_{\theta JA}$	Junction-to-ambient thermal resistance (JEDEC[1])	45.8	°C/W
$R_{\theta JC(top)}$	Junction-to-case (top) thermal resistance	48.5	°C/W
$R_{\theta JB}$	Junction-to-board thermal resistance	19.0	°C/W
Ψ_{JT}	Junction-to-top characterization parameter	1.3	°C/W
Ψ_{JB}	Junction-to-board characterization parameter	19	°C/W
$R_{\theta JC(bot)}$	Junction-to-case (bottom) thermal resistance	7.9	°C/W

(1) For more information about traditional and new thermal metrics, see the Semiconductor and IC Package Thermal Metrics application report.

7.5 Electrical Characteristics

$V_{VBUS_UVLOZ} < V_{VBUS} < V_{VBUS_OVP}$ and $V_{VBUS} > V_{BAT} + V_{SLEEP}$, L=2.2µH, T_J = -40°C to +125°C, and T_J = 25°C for typical values (unless otherwise noted)

PARAMETER		TEST CONDITIONS	MIN	TYP	MAX	UNIT
QUIESCENT CURRENT						
I_{VBUS_REVS}	VBUS reverse current from BAT/SW to VBUS, T_J = -40°C - 85°C	$V_{BAT} = V_{SW}$ = 4.5V, V_{BUS} is shorted to GND, measure V_{BUS} reverse current		0.07	3	µA
$I_{Q_VBUS_DIS}$	VBUS leakage current in disable mode, T_J = -40°C - 85°C	V_{BUS} = 5V, V_{BAT} = 4V, charger is disabled, /EN is pulled high		3.5	4.25	µA
$I_{Q_BAT_HIZ}$	BAT and SW pin leakage current in HiZ mode, T_J = -40°C - 65°C	$V_{BAT} = V_{SW}$ = 4.5V, V_{BUS} floating		0.17	1	µA
VBUS POWER UP						
V_{VBUS_OP}	V_{BUS} operating range		4.1		17	V
V_{VBUS_UVLOZ}	V_{BUS} power on reset	V_{BUS} rising	3		3.8	V
$V_{VBUS_UVLOZ_HYS}$	V_{BUS} power on reset hysteresis	V_{BUS} falling		250		mV
V_{VBUS_LOWV}	A condition to turnon REGN	V_{BUS} rising, REGN turns on, V_{BAT} = 3.2V	3.8	3.9	4	V
$V_{VBUS_LOWV_HYS}$	A condition to turnon REGN, hysteresis	V_{BUS} falling, REGN turns off, V_{BAT} = 3.2V		300		mV
V_{SLEEP}	Enter sleep mode threshold	V_{BUS} falling, V_{BUS} - VBAT, $V_{VBUS_LOWV} < V_{BAT} < V_{BATREG}$	30	60	100	mV
V_{SLEEPZ}	Exit sleep mode threshold	V_{BUS} rising, V_{BUS} - V_{BAT}, $V_{VBUS_LOWV} < V_{BAT} < V_{BATREG}$	110	157	295	mV
$V_{VBUS_OVP_RISE}$	V_{BUS} overvoltage rising threshold	V_{BUS} rising, converter stops switching	17	17.4	17.8	V
$V_{VBUS_OVP_HYS}$	V_{BUS} overvoltage falling hysteresis	V_{BUS} falling, converter stops switching		750		mV
MOSFETS						
R_{DSON_Q1}	Top reverse blocking MOSFET on-resistance between VBUS and PMID (Q1)	V_{REGN} = 5V		40	65	mΩ
R_{DSON_Q2}	High-side switching MOSFET on-resistance between PMID and SW (Q2)	V_{REGN} = 5V		50	82	mΩ
R_{DSON_Q3}	Low-side switching MOSFET on-resistance between SW and GND (Q3)	V_{REGN} = 5V		45	72	mΩ
BATTERY CHARGER						

Copyright © 2024 Texas Instruments Incorporated

7.5 Electrical Characteristics (continued)

V_{VBUS_UVLOZ} < V_{VBUS} < V_{VBUS_OVP} and V_{VBUS} > V_{BAT} + V_{SLEEP}, L=2.2µH, T_J = -40°C to +125°C, and T_J = 25°C for typical values (unless otherwise noted)

PARAMETER		TEST CONDITIONS	MIN	TYP	MAX	UNIT
V_{BATREG}	Charge voltage regulation	VSET pin floating, T_J = -40°C to +85°C	3.582	3.6	3.618	V
		VSET pin is grounded, T_J = -40°C to +85°C	4.03	4.05	4.07	V
		Connect VSET pin to 51kΩ resistor, T_J = -40°C to +85°C	4.13	4.15	4.17	V
		Connect VSET pin to 10kΩ resistor, T_J = -40°C to +85°C	4.179	4.2	4.221	V
I_{CHG}	Charge current regulation	ICHG set at 1.72A with R_{ICHG}=23.2kΩ	1.55	1.72	1.89	A
		ICHG set at 1.0A with RICHG=40.2kΩ	0.9	1	1.1	A
		ICHG set at 0.5A with R_{ICHG}=78.7kΩ	0.4	0.5	0.6	A
I_{TERM}	Termination current	ICHG = 1.72A, 10% of ICHG, RICHG=23.2kΩ	138	172	206	mA
		ICHG = 1.0A, 10% of ICHG, RICHG=40.2kΩ	70	100	130	mA
		ICHG = 0.5A, ITERM =63mA RICHG=78.7kΩ	33	63	93	mA
I_{PRECHG}	Precharge current	ICHG = 1.72A, 10% of ICHG, R_{ICHG}=23.2kΩ	115	172	225	mA
		ICHG = 1.0A, 10% of ICHG, R_{ICHG}=40.2kΩ	50	100	150	mA
		ICHG = 0.5A, 10% of ICHG, R_{ICHG}=78.7kΩ	28	63	98	mA
$V_{BAT_PRECHG_RISE_LFP}$	VBAT precharge rising threshold for LiFePO4	Trickle to precharge, V_{BATREG} = 3.6V	2.05	2.2	2.35	V
$V_{BAT_PRECHG_FALL_LFP}$	VBAT precharge rising threshold for LiFePO4	Precharge to trickle, V_{BATREG} = 3.6V	1.85	2	2.15	V
$I_{BAT_TRICKLE_LFP}$	Trickle charge current for LiFePO4	V_{BAT} < $V_{BAT_PRECHG_FALL}$, V_{BATREG} = 3.6V	25	35	46	mA
$V_{BAT_SHORT_RISE_LFP}$	VBAT short rising threshold for LiFePO4	Short to trickle, V_{BATREG} = 3.6V	1.1	1.2	1.3	V
$V_{BAT_SHORT_RISE}$	VBAT short rising threshold	Short to precharge, V_{BATREG} = 4.05V / 4.15V / 4.2V	2.05	2.2	2.35	V
$V_{BAT_SHORT_FALL_LFP}$	VBAT short falling threshold for LiFePO4	Trickle to short, V_{BATREG} = 3.6V	0.9	1	1.1	V
$V_{BAT_SHORT_FALL}$	VBAT short falling threshold	Precharge to short, V_{BATREG} = 4.05V / 4.15V / 4.2V	1.85	2	2.15	V
I_{BAT_SHORT}	Leakage current into battery	0.5V < V_{BAT} < $V_{BAT_SHORT_FALL}$, T_J = 25°C		-1.5	1	uA
		0.5V < V_{BAT} < $V_{BAT_SHORT_FALL}$, T_J = -40°C to +85°C		-1.5	5	uA
$V_{BAT_LOWV_RISE}$	Rising threshold	Precharge to fast charge	2.9	3	3.1	V
$V_{BAT_LOWV_FALL}$	Falling threshold	Fast charge to precharge	2.6	2.7	2.8	V
V_{RECHG_HYS}	Recharge hysteresis below V_{BATREG}	V_{BAT} falling	110	160	216	mV
INPUT VOLTAGE / CURRENT REGULATION						
V_{INDPM_MIN}	Minimum input voltage regulation	V_{BAT} = 3.5V, measured at PMID pin	3.9	4.0	4.1	V
V_{INDPM}	Input voltage regulation	V_{BAT} = 4V, measured at PMID pin, V_{INDPM} = 1.085*V_{BAT} + 0.025V	4.27	4.37	4.47	V
I_{INDPM_3A}	Input current regulation		3	3.35	3.7	A
BATTERY OVER-VOLTAGE PROTECTION						
$V_{BAT_OVP_RISE}$	Battery overvoltage rising threshold	V_{BAT} rising, as percentage of V_{BATREG} (V_{BATREG} = 4.15V)			104	%
$V_{BAT_OVP_RISE}$	Battery overvoltage rising threshold	V_{BAT} rising, as percentage of V_{BATREG}	101.9	103.5	105	%
$V_{BAT_OVP_FALL}$	Battery overvoltage falling threshold	V_{BAT} falling, as percentage of V_{BATREG}	100.0	101.6	103.1	%
CONVERTER PROTECTION						

Copyright © 2024 Texas Instruments Incorporated

7.5 Electrical Characteristics (continued)

V_{VBUS_UVLOZ} < V_{VBUS} < V_{VBUS_OVP} and V_{VBUS} > V_{BAT} + V_{SLEEP}, L=2.2µH, T_J = -40°C to +125°C, and T_J = 25°C for typical values (unless otherwise noted)

PARAMETER		TEST CONDITIONS	MIN	TYP	MAX	UNIT
$V_{BTST_REFRESH}$	Bootstrap refresh comparator threshold	(V_{BTST} - V_{SW}) when LSFET refresh pulse is requested, V_{BUS} = 5V	2.7	3	3.3	V
I_{HSFET_OCP}	HSFET cycle by cycle over current limit threshold		5.2	6.2	6.7	A
STAT INDICATION						
I_{STAT_SINK}	STAT pin sink current		6			mA
F_{BLINK}	STAT pin blink frequency			1		Hz
F_{BLINK_DUTY}	STAT pin blink duty cycle			50		%
THERMAL REGULATION AND THERMAL SHUTDOWN						
T_{REG}	Junction temperature regulation accuracy		111	120	133	°C
T_{SHUT}	Thermal shutdown rising threshold	Temperature increasing		150		°C
	Thermal shutdown falling threshold	Temperature decreasing		125		°C
BUCK MODE OPERATION						
F_{SW}	PWM switching frequency	SW node frequency	1.02	1.2	1.38	MHz
D_{MAX}	Maximum PWM Duty Cycle			97		%
REGN LDO						
V_{REGN_UVLO}	REGN UVLO	V_{VBUS} rising			3.85	V
V_{REGN}	REGN LDO output voltage	V_{VBUS} = 5V, I_{REGN} = 0 to 16mA	4.2		5	V
V_{REGN}	REGN LDO output voltage	V_{VBUS} = 12V, I_{REGN} = 16mA	4.5		5.4	V
ICHG SETTING						
V_{ICHG}	ICHG pin regulated voltage		993	998	1003	mV
$R_{ICHG_SHORT_FALL}$	Resistance to disable charge		1			kΩ
$R_{ICHG_OPEN_RISE}$	Minimum resistance to disable charge				565	kΩ
R_{ICHG}	Programmable resistance at ICHG		11.7		250	kΩ
$R_{ICHG_MIN_SLE1}$	Minimum programmable resistance at ICHG		11.7			kΩ
R_{ICHG_HIGH}	ICHG setting resistor threshold to clamp precharge and termination current to 63mA	R_{ICHG} > R_{ICHG_HIGH}	60	65	70	kΩ
K_{ICHG}	Charge current ratio	ICHG set at 1.72A with R_{ICHG} = 23.2kΩ, I_{CHG} = K_{ICHG} / R_{ICHG}	36000	40000	44000	AxΩ
		ICHG set at 1.0A with R_{ICHG} = 40.2kΩ, I_{CHG} = K_{ICHG} / R_{ICHG}	36000	40280	44000	AxΩ
		ICHG set at 0.5A with R_{ICHG} = 78.7kΩ, I_{CHG} = K_{ICHG} / R_{ICHG}	32000	40700	48000	AxΩ
COLD/HOT THERMISTOR COMPARATOR						
V_{T1}%	TCOLD (0°C) threshold, charge suspended if thermistor temperature is below T1	V_{TS} rising, as percentage to V_{REGN}	72.68	73.5	74.35	%
V_{T1}%	V_{TS} falling	As Percentage to V_{REGN}	70.68	71.5	72.33	%
V_{T3}%	THOT (45°C) threshold, charge suspended if thermistor temperature is above T_HOT	V_{TS} falling, as percentage to V_{REGN}	46.35	47.25	48.15	%
V_{T3}%	V_{TS} rising	As percentage to VREGN	47.35	48.25	49.15	%
LOGIC I/O PIN CHARACTERESTICS (POL, EN)						
V_{ILO}	Input low threshold	Falling			0.4	V

Copyright © 2024 Texas Instruments Incorporated

7.5 Electrical Characteristics (continued)

V_{VBUS_UVLOZ} < V_{VBUS} < V_{VBUS_OVP} and V_{VBUS} > V_{BAT} + V_{SLEEP}, L=2.2µH, T_J = -40°C to +125°C, and T_J = 25°C for typical values (unless otherwise noted)

PARAMETER		TEST CONDITIONS	MIN	TYP	MAX	UNIT
V_{IH}	Input high threshold	Rising	1.3			V
I_{BIAS}	High-level leakage current at /EN pin	/EN pin is pulled up to 1.8 V		1		µA

7.6 Timing Requirements

PARAMETER		TEST CONDITIONS	MIN	NOM	MAX	UNIT
VBUS/BAT POWER UP						
$t_{CHG_ON_EN}$	Delay from enable at /EN pin to charger power on	/EN pin voltage rising		245		ms
$t_{CHG_ON_VBUS}$	Delay from VBUS to charge start	/EN pin is grounded, batttery present		275		ms
BATTERY CHARGER						
t_{SAFETY_FAST}	Charge safety timer	Fast charge safety timer 20 hours	15.0	20.0	24.0	hr
t_{SAFETY_PRE}	Charge safety timer	Precharge safety timer	1.5	2.0	2.5	hr

Copyright © 2024 Texas Instruments Incorporated

7.7 Typical Characteristics

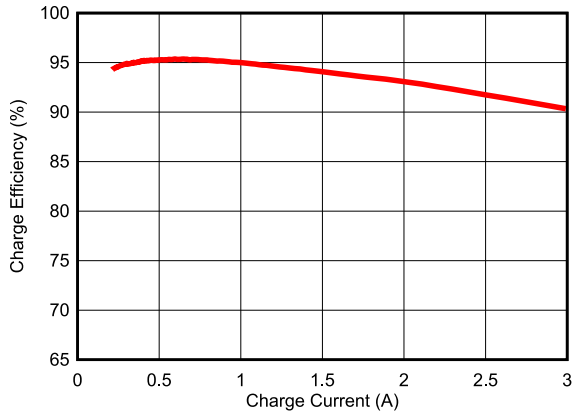

f_{SW} = 1.2 MHz Inductance = 1.0 uH
V_{VBUS} = 5.0 V, V_{BAT} = 3.8 V Inductor DCR = 10 mΩ

Figure 7-1. 1-Cell Battery Charge Efficiency vs Charge Current

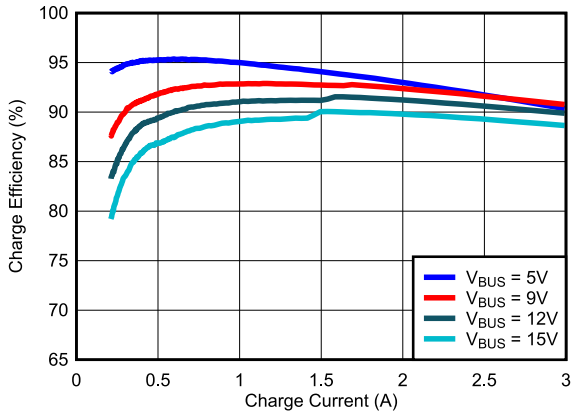

f_{SW} = 1.2 MHz Inductance = 2.2 uH
V_{BAT} = 3.8 V Inductor DCR = 20 mΩ

Figure 7-2. 1-Cell Battery Charge Efficiency vs Charge Current

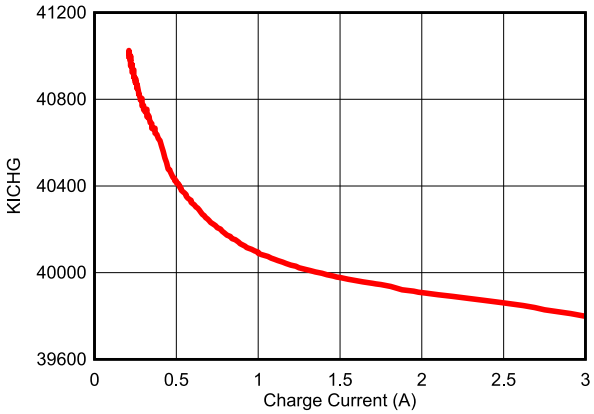

Figure 7-3. KICHG vs Charge Current

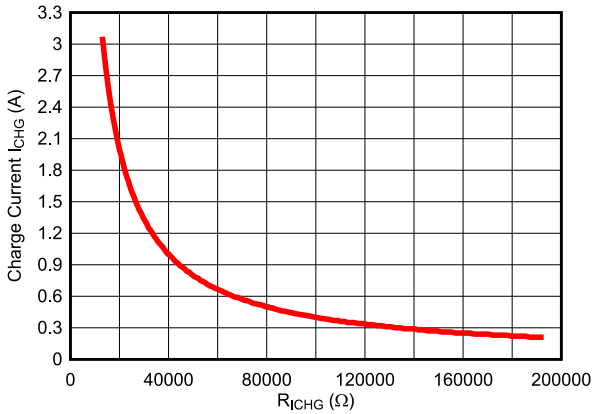

Figure 7-4. Charge Current vs Charge Current Setting Resistance RICHG

Copyright © 2024 Texas Instruments Incorporated

8 Detailed Description

8.1 Overview

The BQ25308 is a highly integrated standalone switch-mode battery charger for single cell Li-Ion and Li-polymer batteries with charge voltage and charge current programmable by an external resistor. It includes an input reverse-blocking FET (RBFET, Q1), high-side switching FET (HSFET, Q2), low-side switching FET (LSFET, Q3), and bootstrap diode for the high-side gate drive as well as current sensing circuitry.

Copyright © 2024 Texas Instruments Incorporated

8.2 Functional Block Diagram

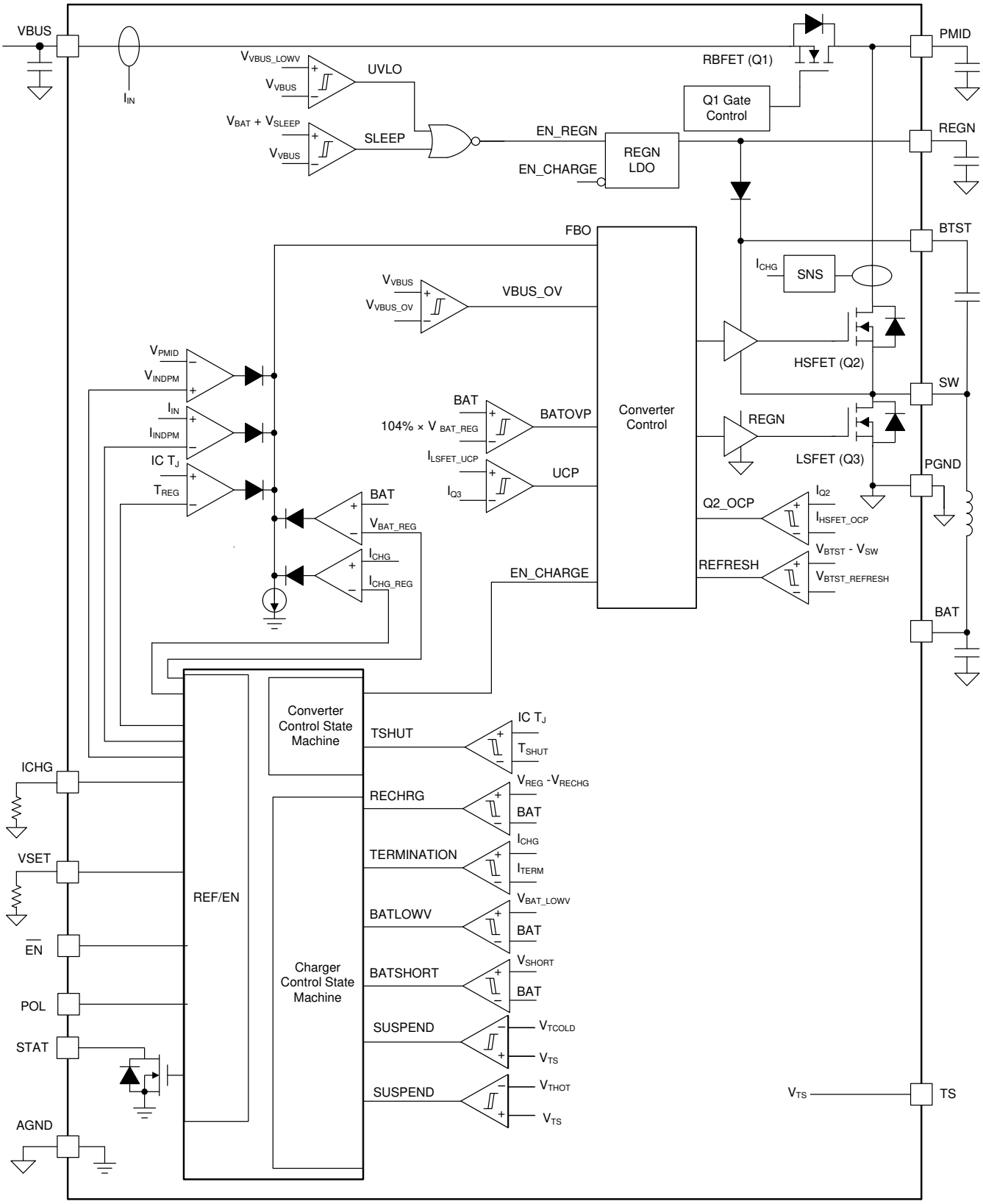

Copyright © 2024 Texas Instruments Incorporated

8.3 Feature Description

8.3.1 Device Power Up

The $\overline{EN}$ pin enables or disables the device. When the device is disabled, the device draws minimum current from the VBUS pin. The device can be powered up from either VBUS or by enabling the device from the $\overline{EN}$ pin.

8.3.1.1 Power-On-Reset (POR)

The $\overline{EN}$ pin can enable or disable the device. When the device is disabled, the device is in disable mode and it draws minimum current at VBUS. When the device is enabled, if VBUS rises above V_{VBUS_UVLOZ}, the device powers part of internal bias and comparators and starts Power on Reset (POR).

8.3.1.2 REGN Regulator Power Up

The internal bias circuits are powered from the input source. The REGN supplies internal bias circuits as well as the HSFET and LSFET gate drive. The REGN also provides voltage rail to STAT LED indication. The REGN is enabled when all the below conditions are valid:

- Chip is enabled by $\overline{EN}$ pin
- V_{VBUS} above V_{VBUS_UVLOZ}
- V_{VBUS} above V_{BAT} + V_{SLEEPZ}
- After sleep comparator deglitch time, VSET detection time, and REGN delay time

REGN remains on at fault conditions. REGN is powered by VBUS only and REGN is off when VBUS power is removed.

8.3.1.3 Charger Power Up

Following REGN power-up, if there is no fault conditions, the charger powers up with soft start. If there is any fault, the charger remains off until fault is cleared. Any of the fault conditions below gates charger power-up:

- V_{VBUS} > V_{VBUS_OVP}
- Thermistor cold/hot fault on TS pin
- V_{BAT} > V_{BAT_OVP}
- Safety timer fault
- ICHG pin is open or shorted to GND
- Die temperature is above TSHUT

8.3.1.4 Charger Enable and Disable by $\overline{EN}$ Pin

With the POL pin floating, the charger can be enabled with $\overline{EN}$ pin pulled low (or floating) or disabled by $\overline{EN}$ pin pulled high. The charger is in disable mode when disabled.

8.3.1.5 Device Unplugged From Input Source

When V_{BUS} is removed from an adaptor, the device stays in HiZ mode and the leakage current from the battery to the BAT pin and SW pin is less than $I_{Q_BAT_HIZ}$.

8.3.2 Battery Charging Management

The BQ25308 charges a 1-cell Li-Ion battery with up to 3.0-A charge current for high a capacity battery from 4.1-V to 17-V input voltage. A new charge cycle starts when the charger power-up conditions are met. The charge voltage is set by an external resistor connected at the VSET pin and charge current are set by external resistors at the ICHG pin. The charger terminates the charging cycle when the charging current is below the termination threshold I_{TERM} and charge voltage is above the recharge threshold(V_{BATREG} - V_{RECHG_HYS}), and device is not in IINDPM or thermal regulation. When a fully charged battery's voltage is discharged below the recharge threshold, the device automatically starts a new charging cycle with safety timer reset. To initiate a recharge cycle, the conditions of charger power-up must be met. The STAT pin output indicates the charging status of charging (LOW), charging complete or charge disabled (HIGH), or charging faults (BLINKING).

Copyright © 2024 Texas Instruments Incorporated

8.3.2.1 Battery Charging Profile

The device charges the battery in three phases: preconditioning, constant current, constant voltage. The device charges the battery based on charge voltage set by the VSET pin and charge current set by the ICHG pin as well as actual battery voltage. The battery charging profile is shown in Figure 8-1.

Table 8-1. Charging Current Setting

MODE	BATTERY VOLTAGE V_{BAT}	CHARGE CURRENT	TYPICAL VALUE
Battery Short	$V_{BAT} < V_{BAT_SHORT}$	Charge Inhibited	-1.5uA
Precharge	$V_{BAT_SHORT} < V_{BAT} < V_{BAT_LOWV}$	I_{PRECHG}	10% of I_{CHG} (I_{PRE} > 63mA)
Fast Charge	$V_{BAT_LOWV} < V_{BAT}$	I_{CHG}	Set by ICHG resistor

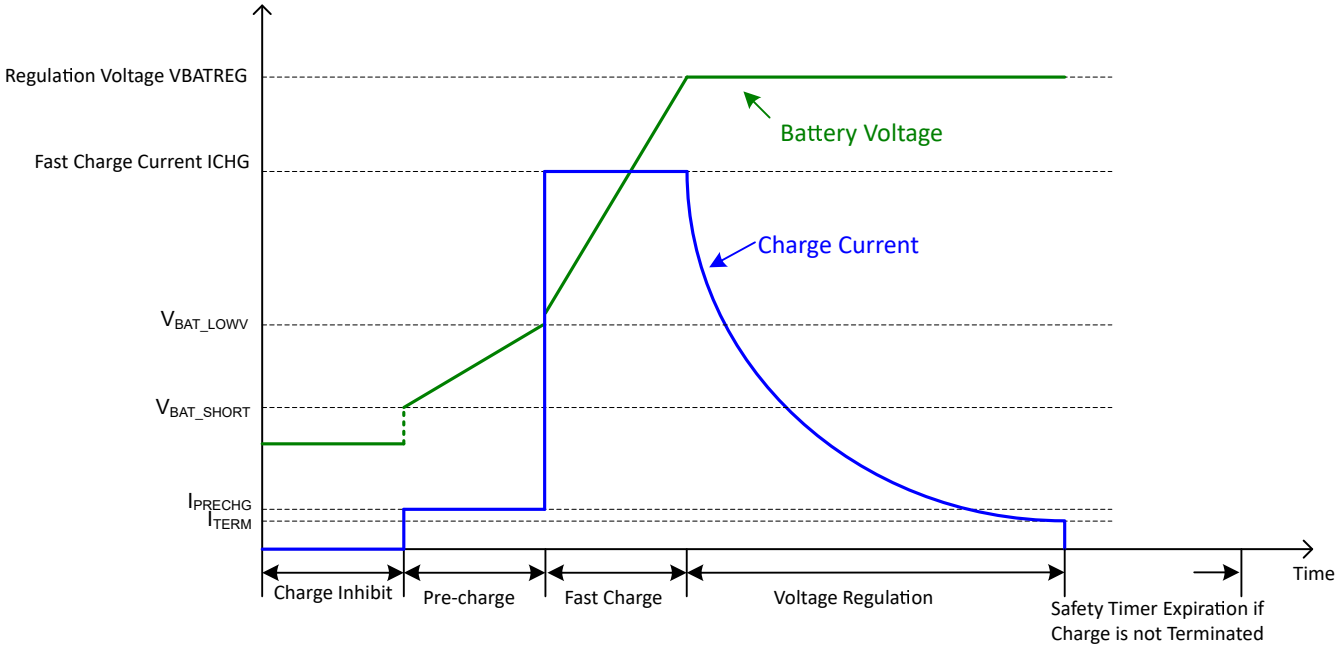

Figure 8-1. Battery Charging Profile

8.3.2.2 Battery Charging Profile for LiFePO4

When V_{BATREG} is set to 3.6V (for LiFePO4 batteries), the device charges the battery in four phases: trickle charge, preconditioning, constant current, constant voltage. The device charges the battery based on charge voltage set by the VSET pin and charge current set by the ICHG pin as well as actual battery voltage. Refer to Figure 8-2for the battery charging profile when V_{BATREG} = 3.6V.

Table 8-2. Charging Current Setting for V_{BATREG} = 3.6V

MODE	BATTERY VOLTAGE V_{BAT}	CHARGE CURRENT	TYPICAL VALUE
Battery Short	$V_{BAT} < V_{BAT_SHORT}$	Charge Inhibited	-1.5uA
Trickle Charge	$V_{BAT_SHORT} < V_{BAT} < V_{BAT_TRICKLE}$	$I_{BAT_TRICKLE}$	35 mA
Precharge	$V_{BAT_TRICKLE} < V_{BAT} < V_{BAT_LOWV}$	I_{PRECHG}	10% of I_{CHG} (I_{PRE} > 63mA)
Fast Charge	$V_{BAT_LOWV} < V_{BAT}$	I_{CHG}	Set by ICHG resistor

Copyright © 2024 Texas Instruments Incorporated

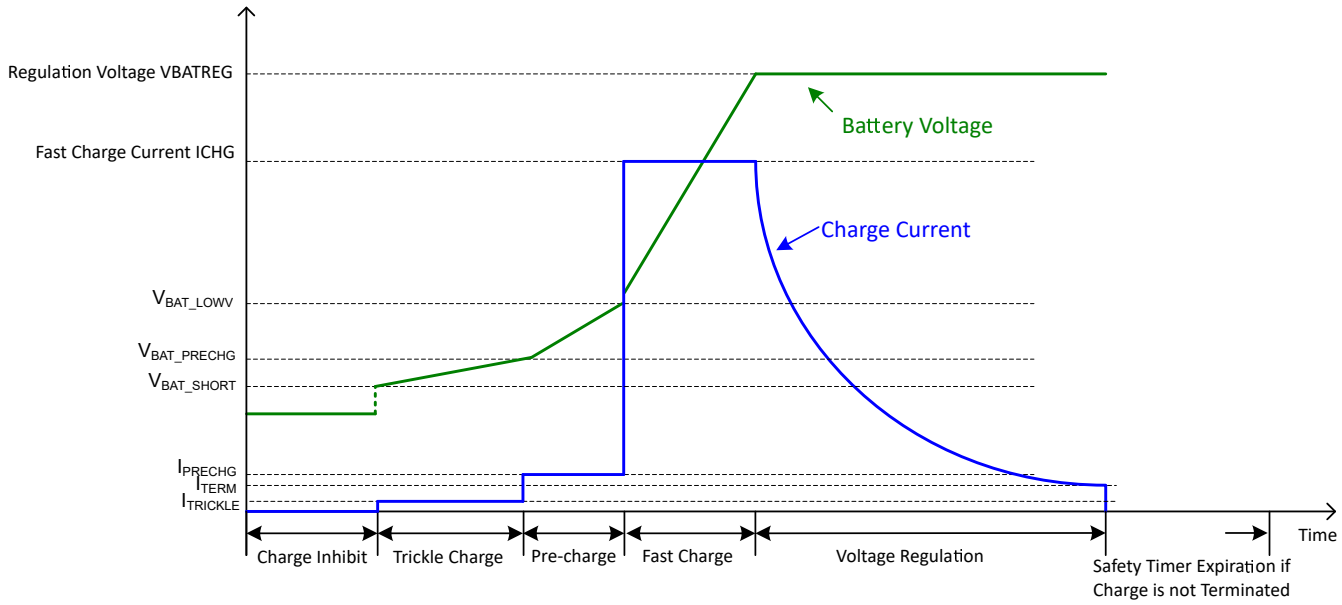

Figure 8-2. Battery Charging Profile for V_{BATREG} = 3.6V

8.3.2.3 Precharge

The device charges the battery at 10% of set fast charge current in precharge mode. When $R_{ICHG} > R_{ICHG_HIGH}$, the precharge current is clamped at 63mA.

8.3.2.4 Charging Termination

The device terminates a charge cycle when the battery voltage is above recharge threshold and the charge current is below termination current. After a charging cycle is completed, the converter stops swicthing, charge is terminated and the system load is powered from battery. Termination is temporarily disabled when the charger device is in input current regulation or thermal regulation mode and the charging safety timer is counted at half the clock rate. The charge termination current is 10% of set fast charge current if $R_{ICHG} < R_{ICHG_HIGH}$. The termination current is clamped at 63mA if $R_{ICHG} > R_{ICHG_HIGH}$.

8.3.2.5 Battery Recharge

A charge cycle is completed when battery is fully charged with charge terminated. If the battery voltage decreases below the recharge threshold (V_{BATREG} - V_{RECHG_HYS}), the charger is enabled with safety timer reset and enabled.

8.3.2.6 Charging Safety Timer

The device has a built-in safety timer to prevent an extended charging cycle due to abnormal battery conditions. The safety timer is 20 hours when the battery voltage is above V_{BAT_LOWV} threshold and 2 hours when below V_{BAT_LOWV} threshold. When the safety timer expires, charge is suspended until the safety timer is reset. The safety timer is reset and charge starts under one of the following conditions:

- Battery voltage falls below recharge threshold
- VBUS voltage is recycled
- $\overline{EN}$ pin is toggled
- Battery voltage transits across V_{BAT_SHORT} threshold
- Battery voltage transits across V_{BAT_LOWV} threshold

If the safety timer expires and the battery voltage is above the recharge threshold, the charger is suspended and the STAT pin is open. If the safety timer expires and the battery voltage is below the recharge threshold, the charger is suspended and the STAT pin blinks to indicate a fault. The safety timer fault is cleared with safety timer reset.

Copyright © 2024 Texas Instruments Incorporated

During input current regulation, thermal regulation, the safety timer counts at half the original clock frequency and the safety timer is doubled. During TS fault, V_{BUS_OVP}, V_{BAT_OVP}, ICHG pin open and short, and IC thermal shutdown faults, the safety timer is suspended. Once the fault(s) is clear, the safety timer resumes to count.

8.3.2.7 Thermistor Temperature Monitoring

The charger device provides a single thermistor input TS pin for battery temperature monitor. RT1 and RT2 program the cold temperature T1 and hot temperature T3. In the equations, $R_{NTC,T1}$ is the NTC thermistor resistance value at temperature T1 and $R_{NTC,T3}$ is the NTC thermistor resistance values at temperature T3. Select 0°C to 45°C for the battery charge temperature range, then NTC thermistor 103AT-2 resistance $R_{NTC,T1}$ = 27.28 kΩ (at 0°C) and $R_{NTC,T3}$ = 4.91 kΩ (at 45°C), from Equation 1 and Equation 2, RT1 and RT2 are derived as:

- RT1 = 4.53 kΩ
- RT2 = 22.6 kΩ

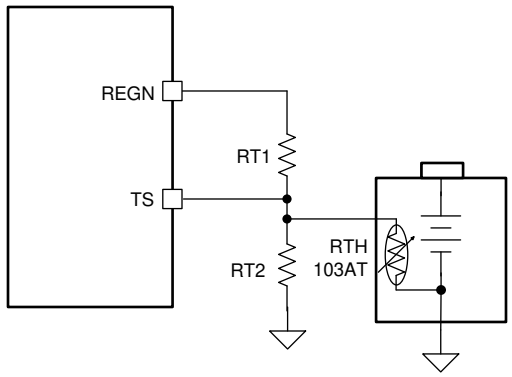

Figure 8-3. Battery Temperature Sensing Circuit

$$RT2 = \frac{R_{NTC,T1} \times R_{NTC,T3} \times \left(\frac{1}{V_{T3}\%} - \frac{1}{V_{T1}\%}\right)}{R_{NTC,T1} \times \left(\frac{1}{V_{T1}\%} - 1\right) - R_{NTC,T3} \times \left(\frac{1}{V_{T3}\%} - 1\right)} \quad (1)$$

$$RT1 = \frac{\frac{1}{V_{T1}\%} - 1}{\frac{1}{R_{T2}} + \frac{1}{R_{NTC,T1}}} \quad (2)$$

8.3.3 Charging Status Indicator (STAT)

The device indicates charging state on the open drain STAT pin. The STAT pin can drive a LED that is pulled up to REGN rail through a current limit resistor.

Table 8-3. STAT Pin State

CHARGING STATE	STAT INDICATOR
Charging in progress (including recharge)	LOW
Charging complete	HIGH
HiZ mode, sleep mode, charge disable	HIGH
Safety timer expiration with battery voltage above recharge threshold	HIGH

Copyright © 2024 Texas Instruments Incorporated

Table 8-3. STAT Pin State (continued)

CHARGING STATE	STAT INDICATOR
Charge faults: 1. VBUS input over voltage 2. TS cold/hot faults 3. Battery over voltage 4. IC thermal shutdown 5. Safety timer expiration with battery voltage below recharge threshold 6. ICHG pin open or short	BLINKING at 1 Hz with 50% duty cycle

8.3.4 Protections

8.3.4.1 Voltage and Current Monitoring

The device closely monitors input voltage and input current for safe operation.

8.3.4.1.1 Input Over-Voltage Protection

This device integrates the functionality of an input over-voltage protection (OVP). The input OVP threshold is $V_{VBUS_OVP_RISE}$. During an input over-voltage event, the converter stops switching and safety timer stops counting as well. The converter resumes switching and the safety timer resumes counting once the VBUS voltage drops back below ($V_{VBUS_OVP_RISE}$ - $V_{VBUS_OVP_HYS}$). The REGN LDO remains on during an input over-voltage event. The STAT pin blinks during an input OVP event.

8.3.4.1.2 Input Voltage Dynamic Power Management (VINDPM)

When the input current of the device exceeds the current capability of the power supply, the charger device regulates PMID voltage by reducing charge current to avoid crashing the input power supply. VINDPM dynamically tracks the battery voltage. The actual VINDPM is the higher of V_{INDPM_MIN} and (1.085*VBAT + 25mV).

8.3.4.1.3 Input Current Limit

The device has built-in input current limit. When the input current is over the threshold I_{INDPM}, the converter duty cycle is reduced to reduce input current.

8.3.4.1.4 Cycle-by-Cycle Current Limit

High-side (HS) FET current is cycle-by-cycle limited. Once the HSFET peak current hits the limit I_{HSFET_OCP}, the HSFET shuts down until the current is reduced below a threshold.

8.3.4.2 Thermal Regulation and Thermal Shutdown

The device monitors the junction temperature T_J to avoid overheating the chip and limit the device surface temperature. When the internal junction temperature exceeds thermal regulation limit T_{REG}, the device lowers down the charge current. During thermal regulation, the average charging current is usually below the programmed battery charging current. Therefore, termination is disabled and the safety timer runs at half the clock rate.

Additionally, the device has thermal shutdown built in to turn off the charger when device junction temperature exceeds T_{SHUT} rising threshold. The charger is reenabled when the junction temperature is below T_{SHUT} falling threshold. During thermal shutdown, the safety timer stops counting and it resumes when the temperature drops below the threshold.

8.3.4.3 Battery Protection

8.3.4.3.1 Battery Over-Voltage Protection (V_{BAT_OVP})

The battery voltage is clamped at above the battery regulation voltage. When the battery voltage is over $V_{BAT_OVP_RISE}$, the converter stops switching until the battery voltage is below the falling threshold. During a battery over-voltage event, the safety timer stops counting and the STAT pin reports the fault and it resumes

Copyright © 2024 Texas Instruments Incorporated

once the battery voltage falls below the falling threshold. A 7-mA pull-down current is on the BAT pin once BAT_OVP is triggered. BAT_OVP may be triggered in charging mode, termination mode, and fault mode.

8.3.4.3.2 Dead Battery Charge Inhibit

When VBAT is below V_{BAT_SHORT}, charging is inhibited. This prevents charging a dangerously discharged battery, which can be useful for applications that do not include a battery protector.

8.3.4.4 ICHG Pin Open and Short Protection

To protect against when the ICHG pin is short or open, the charger immediately shuts off once the ICHG pin is open or short to GND and the STAT pin blinks to report the fault. At powerup, if the ICHG pin is detected open or short to GND, the charge does not power up until the fault is clear.

8.4 Device Functional Modes

8.4.1 Disable Mode, HiZ Mode, Sleep Mode, Charge Mode, Termination Mode, and Fault Mode

The device operates in different modes depending on VBUS voltage, battery voltage, and $\overline{EN}$ pin, POL pin, and ICHG pin connection. The functional modes are listed in the following table.

Table 8-4. Device Functional Modes

MODE	CONDITIONS	REGN LDO	CHARGE ENABLED	STAT PIN
Disable Mode	Device is disabled, POL floating or pulled high, and $\overline{EN}$ pulled high	OFF	NO	OPEN
	Device is disabled, POL pulled low, $\overline{EN}$ pulled low or floating	OFF	NO	OPEN
HiZ Mode	Device is enabled and $V_{VBUS} < V_{VBUS_UVLOZ}$	OFF	NO	OPEN
Sleep Mode	Device is enabled and $V_{VBUS} > V_{VBUS_UVLOZ}$ and $V_{VBUS} < V_{BAT} + V_{SLEEPZ}$	OFF	NO	OPEN
Charge Mode	Device is enabled, $V_{VBUS} > V_{VBUS_LOWV}$ and $V_{VBUS} > V_{BAT} + V_{SLEEPZ}$, no faults, charge is not terminated	ON	YES	SHORT to GND
Charge Termination Mode	$V_{VBUS} > V_{VBUS_LOWV}$ and $V_{VBUS} > V_{BAT} + V_{SLEEPZ}$ and device is enabled, no faults, charge is terminated	ON	NO	OPEN
Fault Mode	V_{BUS_OVP}, TS cold/hot, V_{BAT_OVP}, IC thermal shutdown, safety timer fault, ICHG pin open or short	ON	NO	BLINKING

Copyright © 2024 Texas Instruments Incorporated

9 Application and Implementation

Note

Information in the following applications sections is not part of the TI component specification, and TI does not warrant its accuracy or completeness. TI's customers are responsible for determining suitability of components for their purposes, as well as validating and testing their design implementation to confirm system functionality.

9.1 Application Information

A typical application consists of a single cell battery charger for Li-Ion and Li-polymer and LiFePO4 batteries used in a wide range of portable devices and accessories. It integrates an input reverse-block FET (RBFET, Q1), high-side switching FET (HSFET, Q2), and low-side switching FET (LSFET, Q3). The Buck converter output is connected to the battery directly to charge the battery and power system loads. The device also integrates a bootstrap diode for high-side gate drive.

9.2 Typical Applications

The typical applications in this section include a standalone charger without power path and a standalone charger with external power path.

Copyright © 2024 Texas Instruments Incorporated

9.2.1 Typical Application

The typical application in this section includes a standalone charger without power path.

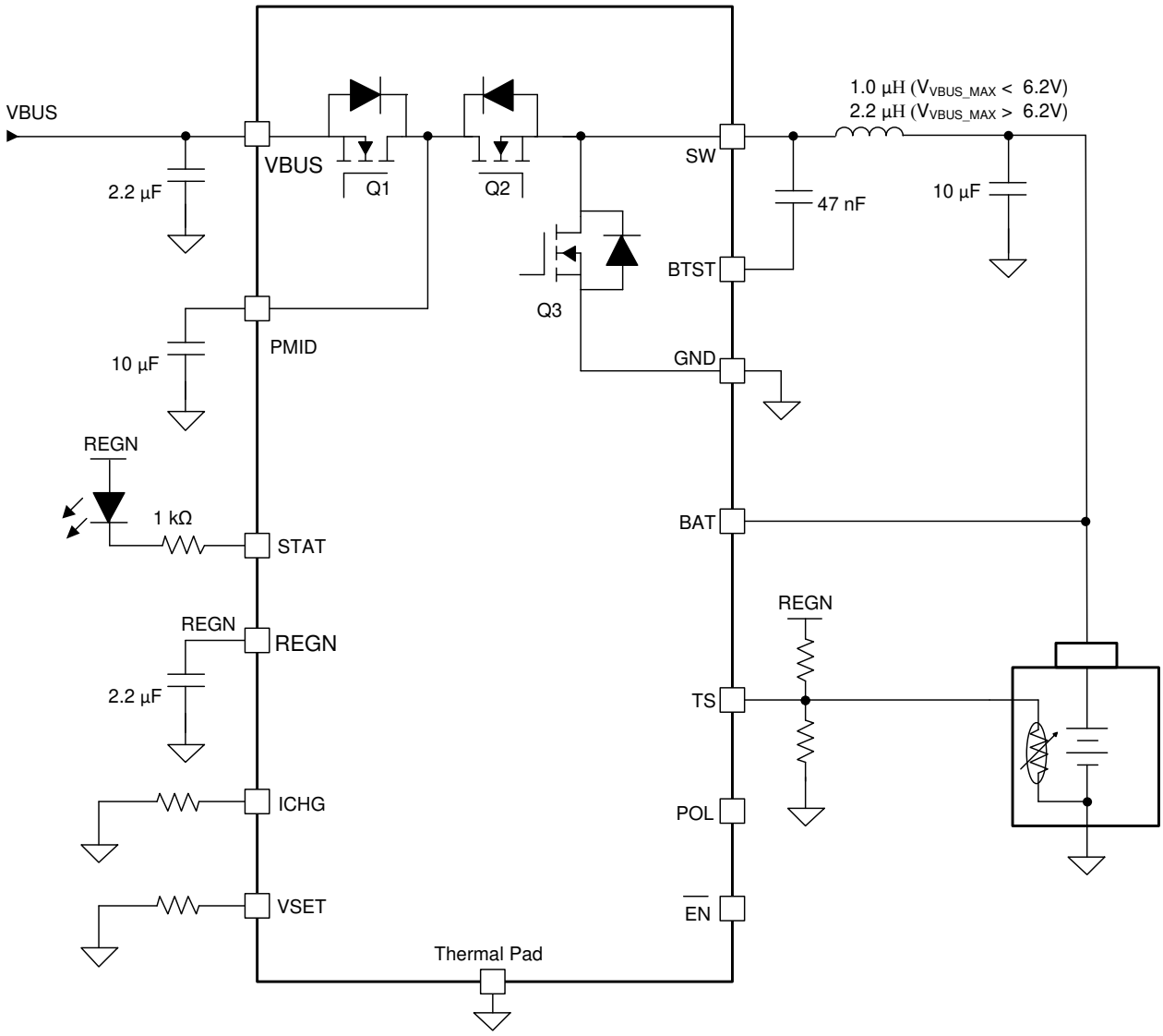

Figure 9-1. Typical Application Diagram

9.2.1.1 Design Requirements

Table 9-1. Design Requirements

PARAMETER	VALUE
Input Voltage	4.1V to 17V
Input Current	3.0A
Fast Charge Current	3.0A
Battery Regulation Voltage	3.6/4.05V/4.15V/4.2V

9.2.1.2 Detailed Design Procedure

9.2.1.2.1 Charge Voltage Settings

Battery charge voltage is set by a resistor connected at the VSET pin. When the REGN LDO startup conditions are met, and before the REGN LDO powers up, the internal VSET detection circuit is enabled to detect VSET pin

Copyright © 2024 Texas Instruments Incorporated

resistance and set battery charge voltage accordingly. The VSET detection circuit is disabled after detection is complete and changing resistance values on the fly does not change the battery charge voltage. VSET detection is reenabled once the REGN LDO is recycled.

9.2.1.2.2 Charge Current Setting

The charger current is set by the resistor value at the ICHG pin according to the equation below:

I_{CHG} (A) = K_{ICHG} (A·Ω) / R_{ICHG}(Ω)

K_{ICHG} is a coefficient that is listed in the Electrical Characteristics table and R_{ICHG} is the value of the resistor at the ICHG pin to GND. K_{ICHG} is typically 40,000 (A·Ω) and it is slightly shifted up at lower charge current setting. The K_{ICHG} vs ICHG typical characteresitc curve is shown in Figure 7-3.

9.2.1.2.3 Inductor Selection

The 1.2-MHz switching frequency allows the use of small inductor and capacitor values. The inductance value is selected based on the maximum input voltage V_{VBUS_MAX} in the application. A 1-µH inductor is recommended if V_{VBUS_MAX} < 6.2V and a 2.2-µH inductor is recommended if V_{VBUS_MAX} > 6.2V. Inductor saturation current I_{SAT} should be higher than the charging current I_{CHG} plus half the ripple current I_{RIPPLE}:

$$I_{SAT} \geq I_{CHG} + (1/2)\, I_{RIPPLE} \tag{3}$$

The inductor ripple current I_{RIPPLE} depends on the input voltage (V_{VBUS}), the duty cycle (D = V_{BAT}/V_{VBUS}), the switching frequency (f_S), and the inductance (L).

$$I_{RIPPLE} = \frac{V_{IN} \times D \times (1 - D)}{fs \times L} \tag{4}$$

The maximum inductor ripple current occurs when the duty cycle (D) is 0.5 or approximately 0.5.

9.2.1.2.4 Input Capacitor

Design input capacitance to provide enough ripple current rating to absorb the input switching ripple current. Worst case RMS ripple current is half of the charging current when the duty cycle is 0.5. If the converter does not operate at 50% duty cycle, then the worst case capacitor RMS current I_{Cin} occurs where the duty cycle is closest to 50% and can be estimated using Equation 5.

$$I_{CIN} = I_{CHG} \times \sqrt{D \times (1 - D)} \tag{5}$$

A low ESR ceramic capacitor such as X7R or X5R is preferred for the input decoupling capacitor and should be placed as close as possible to the drain of the high-side MOSFET and source of the low-side MOSFET. The voltage rating of the capacitor must be higher than the normal input voltage level. A rating of 25-V or higher capacitor is preferred for 15-V input voltage.

9.2.1.2.5 Output Capacitor

Ensure that the output capacitance has enough ripple current rating to absorb the output switching ripple current. The equation below shows the output capacitor RMS current I_{COUT} calculation.

$$I_{COUT} = \frac{I_{RIPPLE}}{2 \times \sqrt{3}} \approx 0.29 \times I_{RIPPLE} \tag{6}$$

The output capacitor voltage ripple can be calculated as follows:

$$\Delta V_O = \frac{V_{OUT}}{8LCfs^2}\left(1 - \frac{V_{OUT}}{V_{IN}}\right) \tag{7}$$

Copyright © 2024 Texas Instruments Incorporated

At certain input and output voltages and switching frequency, the voltage ripple can be reduced by increasing the output filter LC.

9.2.1.3 Application Curves

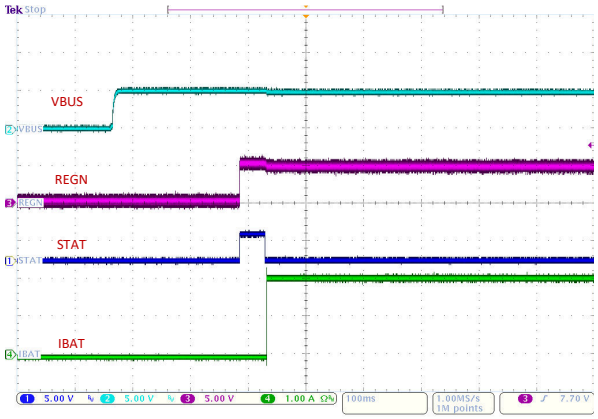

VBUS = 5V
ICHG = 2A
Device Enabled

Figure 9-2. Power Up from VBUS

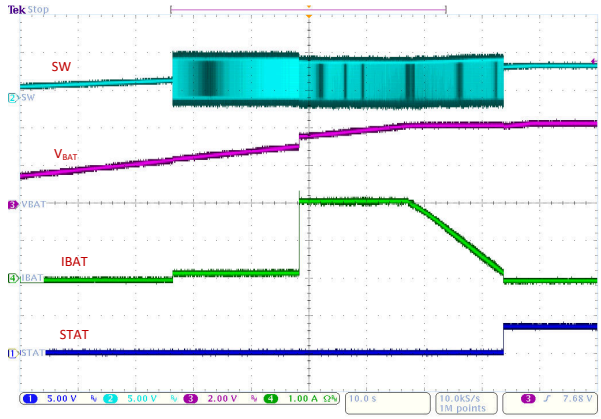

VBUS = 5V
ICHG = 2A
VBAT = 1.5V - 4.2V
VBATREG = 4.2V

Figure 9-3. Charge Cycle

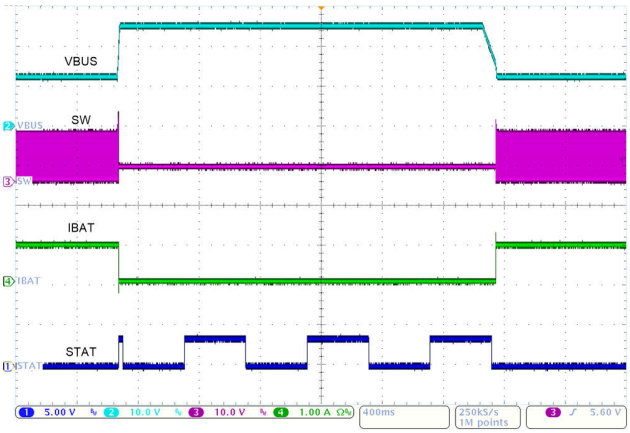

VBUS = 12V -25V -12V
ICHG = 1A
VBAT = 3.8V

Figure 9-4. VBUS Over Voltage Protection

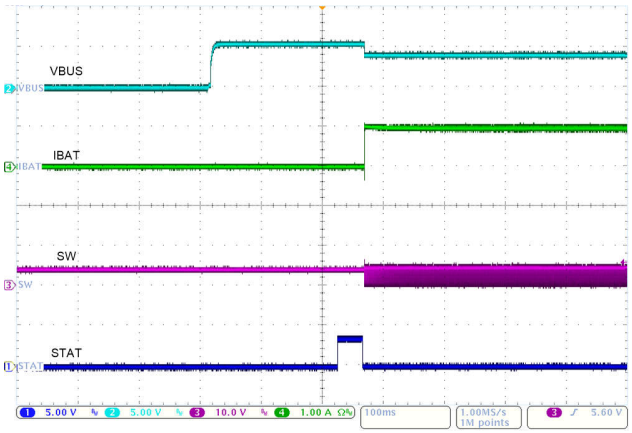

VBUS = 5V
ICHG = 2A
Adaptor Currrent Limit: 1A
VBAT = 3.5V

Figure 9-5. VBUS Startup Into VINDPM

Copyright © 2024 Texas Instruments Incorporated

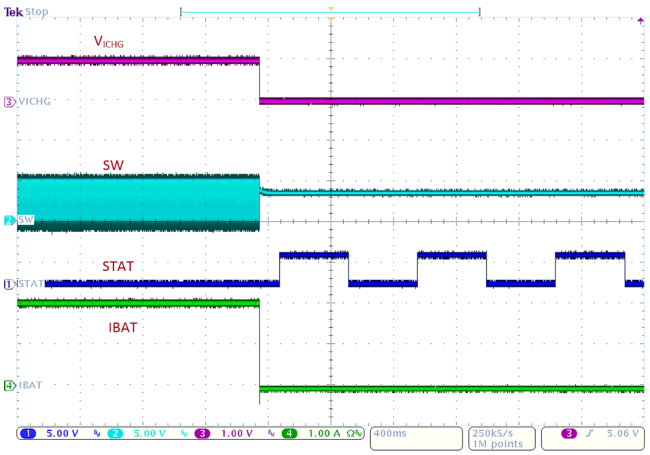

VBUS = 5V From ICHG = 2A to ICHG pin short

Figure 9-6. ICHG Pin Short Circuit Protection

9.2.2 Typical Application with External Power Path

In the case where a system needs to be immediately powered up from VBUS when the battery is overdischarged or dead, the application circuit shown in Figure 9-7 can be used to provide a power path from VBUS/PMID to VSYS. PFET Q4 is an external PFET that turns on to supply VSYS from the battery when VBUS is removed; PFET Q4 turns off when VBUS is plugged in and VSYS is supplied from VBUS/PMID.

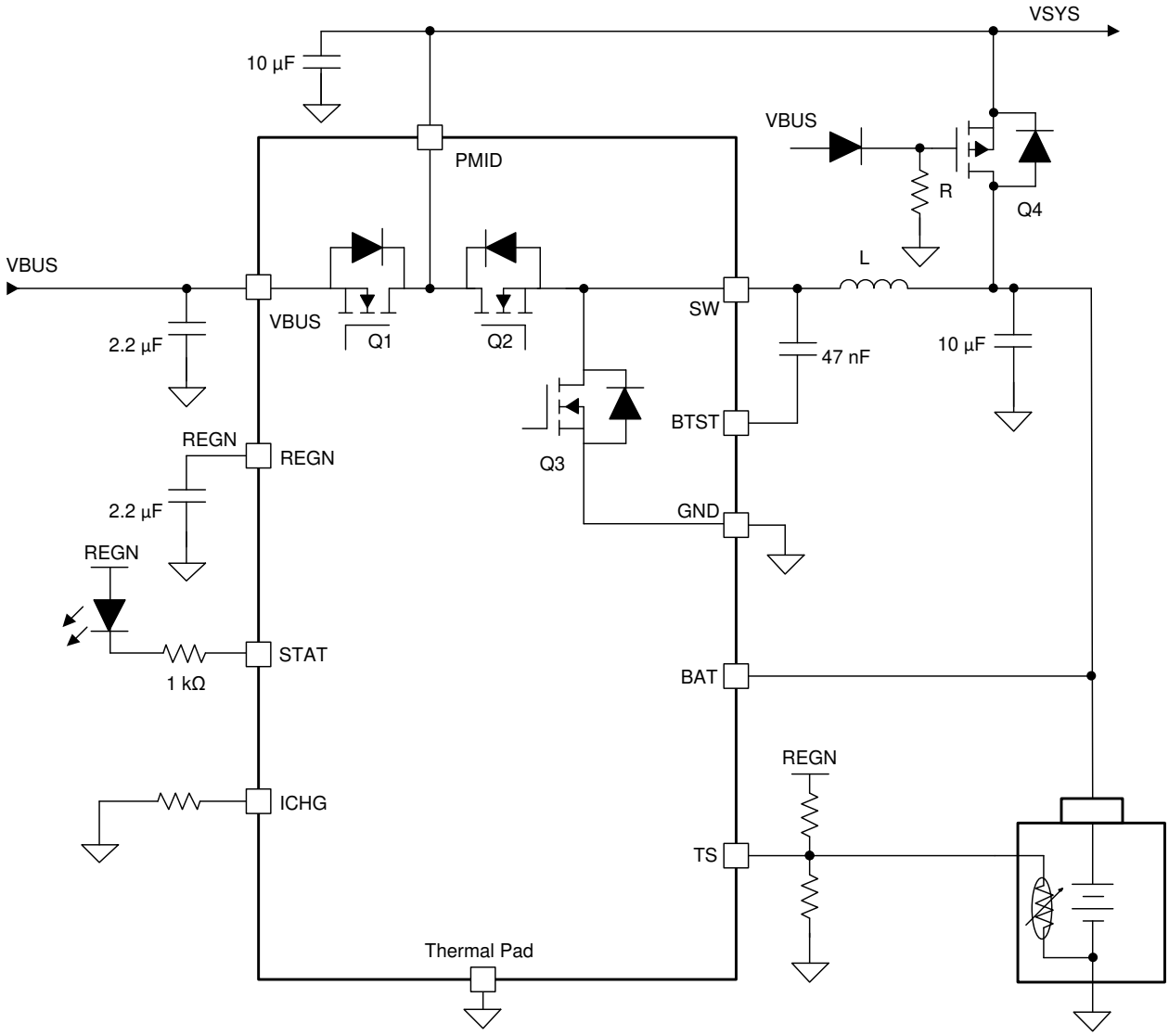

Figure 9-7. Typical Application Diagram with Power Path

9.2.2.1 Design Requirements

For design requirements, see Section 9.2.1.1.

9.2.2.2 Detailed Design Procedure

For detailed design procedure, see Section 9.2.1.2.

9.2.2.3 Application Curves

For application curves, see Section 9.2.1.3.

Copyright © 2024 Texas Instruments Incorporated

10 Power Supply Recommendations

In order to provide an output voltage on the BAT pin, the device requires a power supply between 4.1 V and 17 V Li-Ion battery with positive terminal connected to BAT. The source current rating needs to be at least 3 A in order for the buck converter to provide maximum output power to BAT or the system connected to the BAT pin.

Copyright © 2024 Texas Instruments Incorporated

11 Layout

11.1 Layout Guidelines

The switching node rise and fall times should be minimized for minimum switching loss. Proper layout of the components to minimize high frequency current path loop (see Figure 11-1) is important to prevent electrical and magnetic field radiation and high frequency resonant problems. Follow this specific order carefully to achieve the proper layout.

- Place input capacitor as close as possible to PMID pin and use shortest thick copper trace to connect input capacitor to PMID pin and GND plane.
- It is critical that the exposed thermal pad on the backside of the device be soldered to the PCB ground. Ensure that there are sufficient thermal vias directly under the IC, connecting to the ground plane on the other layers. Connect the GND pins to thermal pad on the top layer.
- Put output capacitor near to the inductor output terminal and the charger device. Ground connections need to be tied to the IC ground with a short copper trace or GND plane
- Place inductor input terminal to SW pin as close as possible and limit SW node copper area to lower electrical and magnetic field radiation. Do not use multiple layers in parallel for this connection. Minimize parasitic capacitance from this area to any other trace or plane.
- Route analog ground separately from power ground if possible. Connect analog ground and power ground together using thermal pad as the single ground connection point under the charger device. It is acceptable to connect all grounds to a single ground plane if multiple ground planes are not available.
- Decoupling capacitors should be placed next to the device pins and make trace connection as short as possible.
- For high input voltage and high charge current applications, sufficient copper area on GND should be budgeted to dissipate heat from power losses.
- Ensure that the number and sizes of vias allow enough copper for a given current path

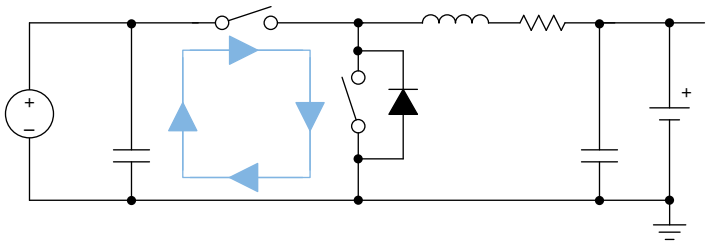

Figure 11-1. High Frequency Current Path

11.2 Layout Example

The device pinout and component count are optimized for a 2-layer PCB design. The 2-layer PCB layout example is shown in Figure 11-2.

Copyright © 2024 Texas Instruments Incorporated

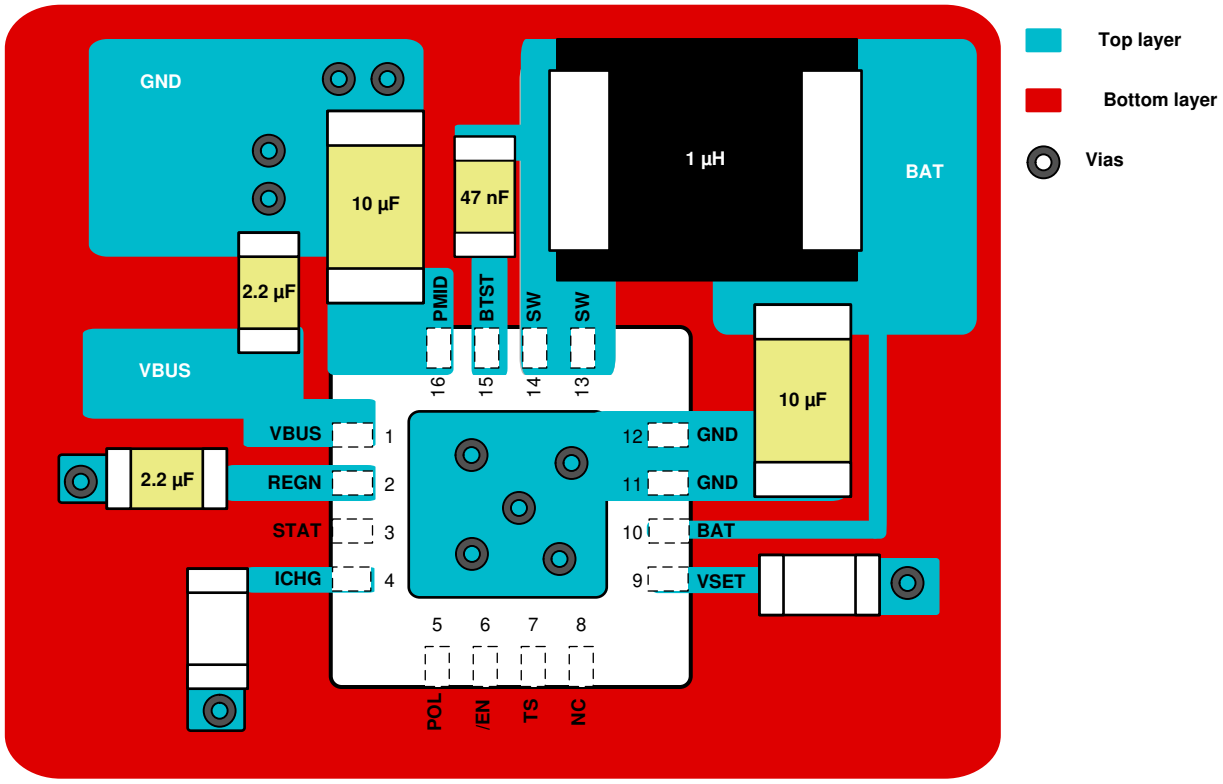

Figure 11-2. Layout Example

12 Device and Documentation Support

12.1 Device Support

12.1.1 Third-Party Products Disclaimer

TI'S PUBLICATION OF INFORMATION REGARDING THIRD-PARTY PRODUCTS OR SERVICES DOES NOT CONSTITUTE AN ENDORSEMENT REGARDING THE SUITABILITY OF SUCH PRODUCTS OR SERVICES OR A WARRANTY, REPRESENTATION OR ENDORSEMENT OF SUCH PRODUCTS OR SERVICES, EITHER ALONE OR IN COMBINATION WITH ANY TI PRODUCT OR SERVICE.

12.2 Receiving Notification of Documentation Updates

To receive notification of documentation updates, navigate to the device product folder on ti.com. Click on *Notifications* to register and receive a weekly digest of any product information that has changed. For change details, review the revision history included in any revised document.

12.3 Support Resources

TI E2E™ support forums are an engineer's go-to source for fast, verified answers and design help — straight from the experts. Search existing answers or ask your own question to get the quick design help you need.

Linked content is provided "AS IS" by the respective contributors. They do not constitute TI specifications and do not necessarily reflect TI's views; see TI's Terms of Use.

12.4 Trademarks

TI E2E™ is a trademark of Texas Instruments.
All trademarks are the property of their respective owners.

12.5 Electrostatic Discharge Caution



This integrated circuit can be damaged by ESD. Texas Instruments recommends that all integrated circuits be handled with appropriate precautions. Failure to observe proper handling and installation procedures can cause damage.

ESD damage can range from subtle performance degradation to complete device failure. Precision integrated circuits may be more susceptible to damage because very small parametric changes could cause the device not to meet its published specifications.

12.6 Glossary

TI Glossary — This glossary lists and explains terms, acronyms, and definitions.

13 Revision History

NOTE: Page numbers for previous revisions may differ from page numbers in the current version.

DATE	REVISION	NOTES
April 2024	*	Initial Release

Copyright © 2024 Texas Instruments Incorporated

14 Mechanical, Packaging, and Orderable Information

The following pages include mechanical, packaging, and orderable information. This information is the most current data available for the designated devices. This data is subject to change without notice and revision of this document. For browser-based versions of this data sheet, refer to the left-hand navigation.

Copyright © 2024 Texas Instruments Incorporated

PACKAGING INFORMATION

Orderable part number	Status (1)	Material type (2)	Package | Pins	Package qty | Carrier	RoHS (3)	Lead finish/ Ball material (4)	MSL rating/ Peak reflow (5)	Op temp (°C)	Part marking (6)
BQ25308RTER	Active	Production	WQFN (RTE) | 16	3000 | LARGE T&R	Yes	NIPDAU	Level-1-260C-UNLIM	-40 to 85	B25308
BQ25308RTER.A	Active	Production	WQFN (RTE) | 16	3000 | LARGE T&R	Yes	NIPDAU	Level-1-260C-UNLIM	-40 to 85	B25308
BQ25308RTER.B	Active	Production	WQFN (RTE) | 16	3000 | LARGE T&R	Yes	NIPDAU	Level-1-260C-UNLIM	-40 to 85	B25308

(1) **Status:** For more details on status, see our product life cycle.

(2) **Material type:** When designated, preproduction parts are prototypes/experimental devices, and are not yet approved or released for full production. Testing and final process, including without limitation quality assurance, reliability performance testing, and/or process qualification, may not yet be complete, and this item is subject to further changes or possible discontinuation. If available for ordering, purchases will be subject to an additional waiver at checkout, and are intended for early internal evaluation purposes only. These items are sold without warranties of any kind.

(3) **RoHS values:** Yes, No, RoHS Exempt. See the TI RoHS Statement for additional information and value definition.

(4) **Lead finish/Ball material:** Parts may have multiple material finish options. Finish options are separated by a vertical ruled line. Lead finish/Ball material values may wrap to two lines if the finish value exceeds the maximum column width.

(5) **MSL rating/Peak reflow:** The moisture sensitivity level ratings and peak solder (reflow) temperatures. In the event that a part has multiple moisture sensitivity ratings, only the lowest level per JEDEC standards is shown. Refer to the shipping label for the actual reflow temperature that will be used to mount the part to the printed circuit board.

(6) **Part marking:** There may be an additional marking, which relates to the logo, the lot trace code information, or the environmental category of the part.

Multiple part markings will be inside parentheses. Only one part marking contained in parentheses and separated by a "~" will appear on a part. If a line is indented then it is a continuation of the previous line and the two combined represent the entire part marking for that device.

Important Information and Disclaimer: The information provided on this page represents TI's knowledge and belief as of the date that it is provided. TI bases its knowledge and belief on information provided by third parties, and makes no representation or warranty as to the accuracy of such information. Efforts are underway to better integrate information from third parties. TI has taken and continues to take reasonable steps to provide representative and accurate information but may not have conducted destructive testing or chemical analysis on incoming materials and chemicals. TI and TI suppliers consider certain information to be proprietary, and thus CAS numbers and other limited information may not be available for release.

In no event shall TI's liability arising out of such information exceed the total purchase price of the TI part(s) at issue in this document sold by TI to Customer on an annual basis.

TAPE AND REEL INFORMATION

REEL DIMENSIONS

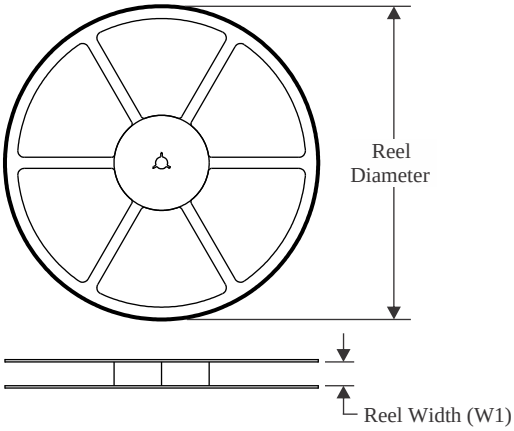

TAPE DIMENSIONS

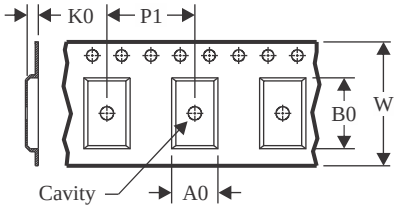

A0	Dimension designed to accommodate the component width
B0	Dimension designed to accommodate the component length
K0	Dimension designed to accommodate the component thickness
W	Overall width of the carrier tape
P1	Pitch between successive cavity centers

QUADRANT ASSIGNMENTS FOR PIN 1 ORIENTATION IN TAPE

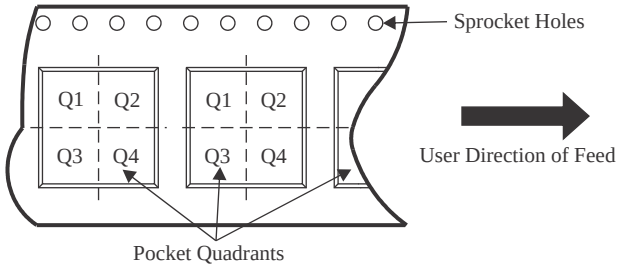

*All dimensions are nominal

Device	Package Type	Package Drawing	Pins	SPQ	Reel Diameter (mm)	Reel Width W1 (mm)	A0 (mm)	B0 (mm)	K0 (mm)	P1 (mm)	W (mm)	Pin1 Quadrant
BQ25308RTER	WQFN	RTE	16	3000	330.0	12.4	3.3	3.3	1.1	8.0	12.0	Q2

TAPE AND REEL BOX DIMENSIONS

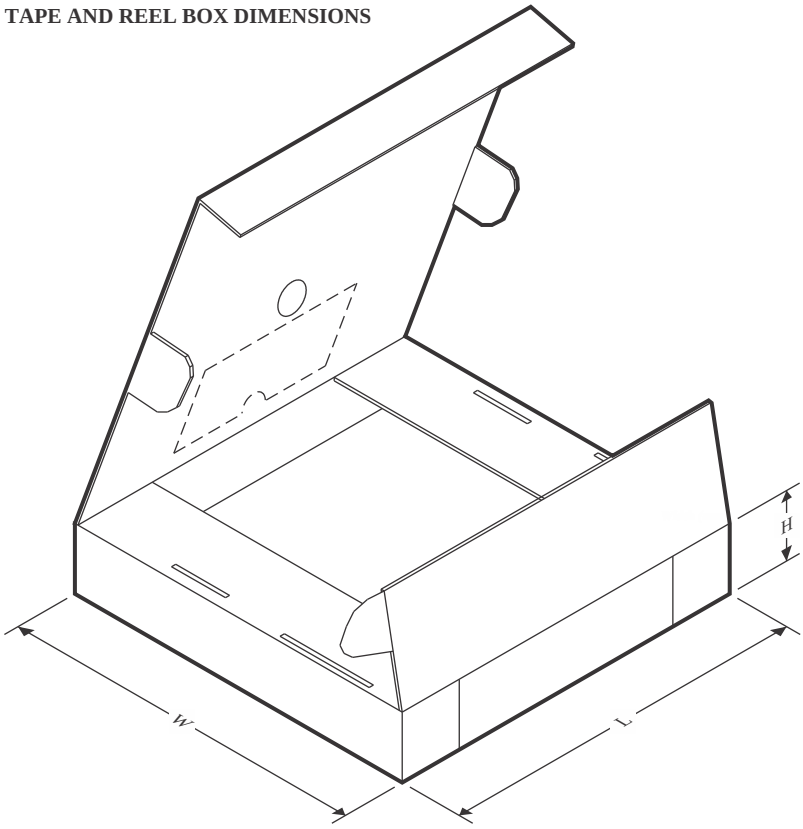

*All dimensions are nominal

Device	Package Type	Package Drawing	Pins	SPQ	Length (mm)	Width (mm)	Height (mm)
BQ25308RTER	WQFN	RTE	16	3000	360.0	360.0	36.0

GENERIC PACKAGE VIEW

RTE 16

WQFN - 0.8 mm max height

3 x 3, 0.5 mm pitch

PLASTIC QUAD FLATPACK - NO LEAD

This image is a representation of the package family, actual package may vary.
Refer to the product data sheet for package details.

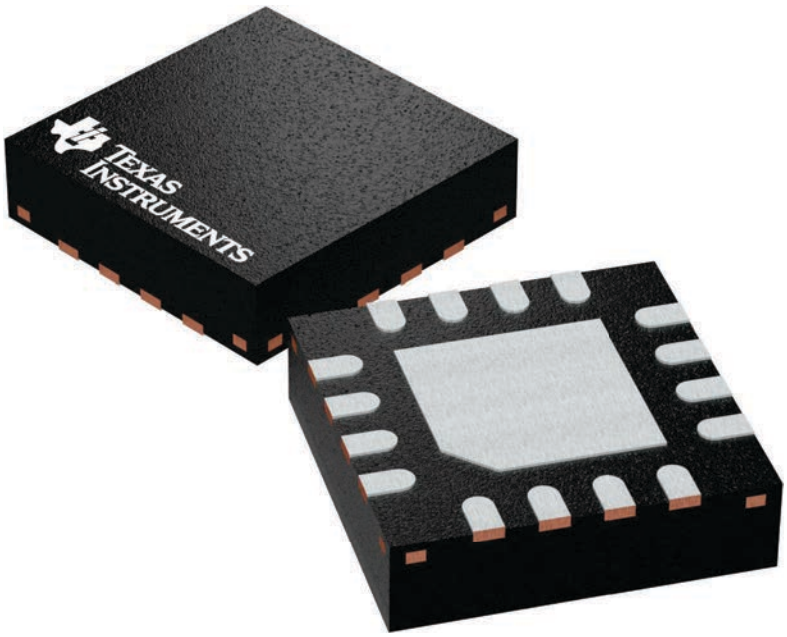

RTE0016C

PACKAGE OUTLINE

WQFN - 0.8 mm max height

PLASTIC QUAD FLATPACK - NO LEAD

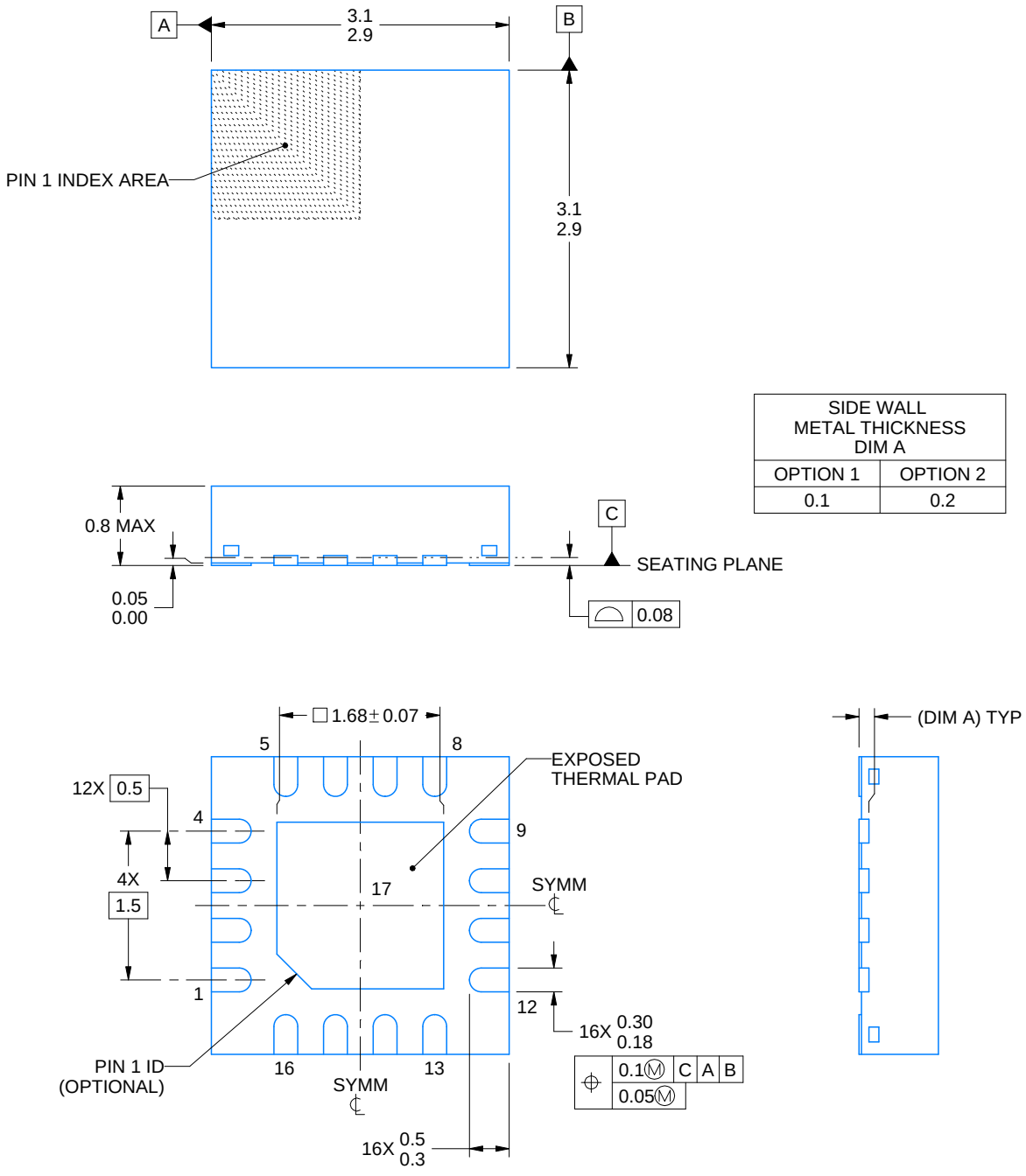

NOTES:

1. All linear dimensions are in millimeters. Any dimensions in parenthesis are for reference only. Dimensioning and tolerancing per ASME Y14.5M.
2. This drawing is subject to change without notice.
3. The package thermal pad must be soldered to the printed circuit board for thermal and mechanical performance.

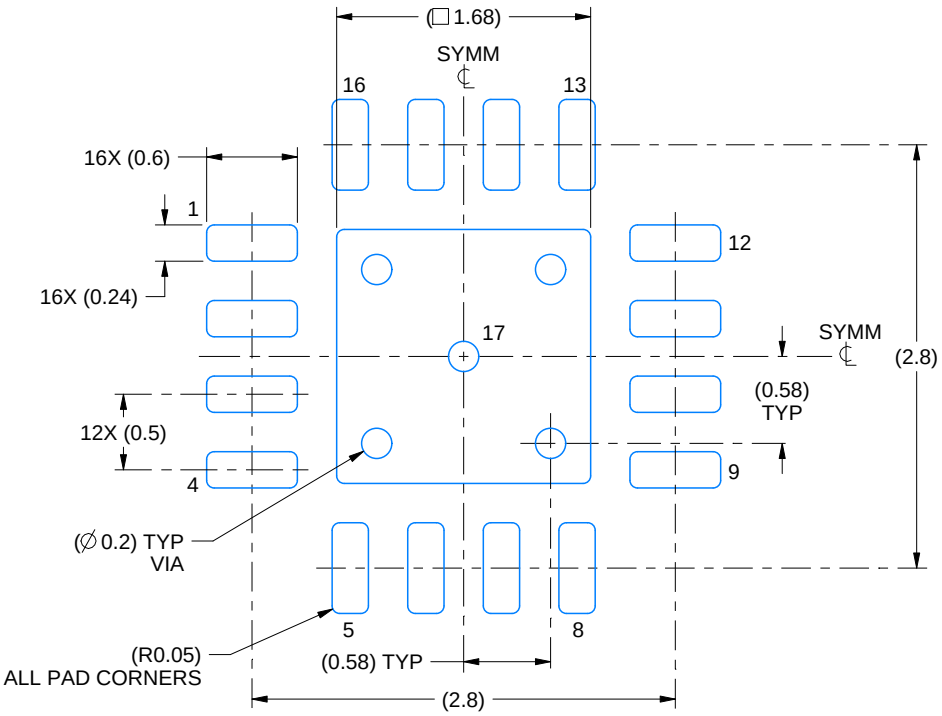

LAND PATTERN EXAMPLE
EXPOSED METAL SHOWN
SCALE:20X

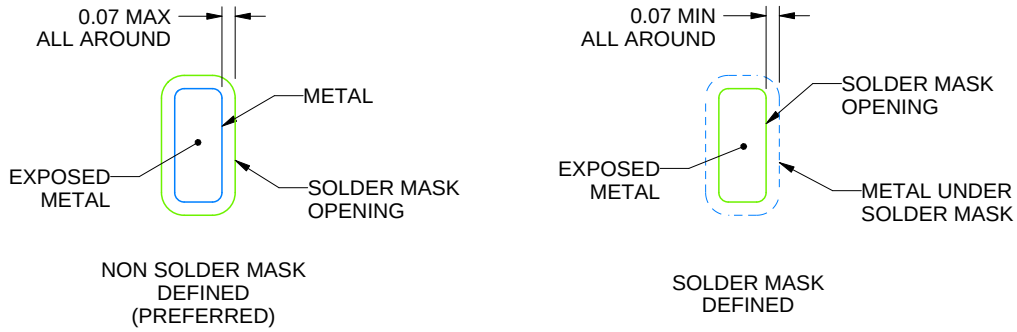

SOLDER MASK DETAILS

4219117/B 04/2022

NOTES: (continued)

4. This package is designed to be soldered to a thermal pad on the board. For more information, see Texas Instruments literature number SLUA271 (www.ti.com/lit/slua271).
5. Vias are optional depending on application, refer to device data sheet. If any vias are implemented, refer to their locations shown on this view. It is recommended that vias under paste be filled, plugged or tented.

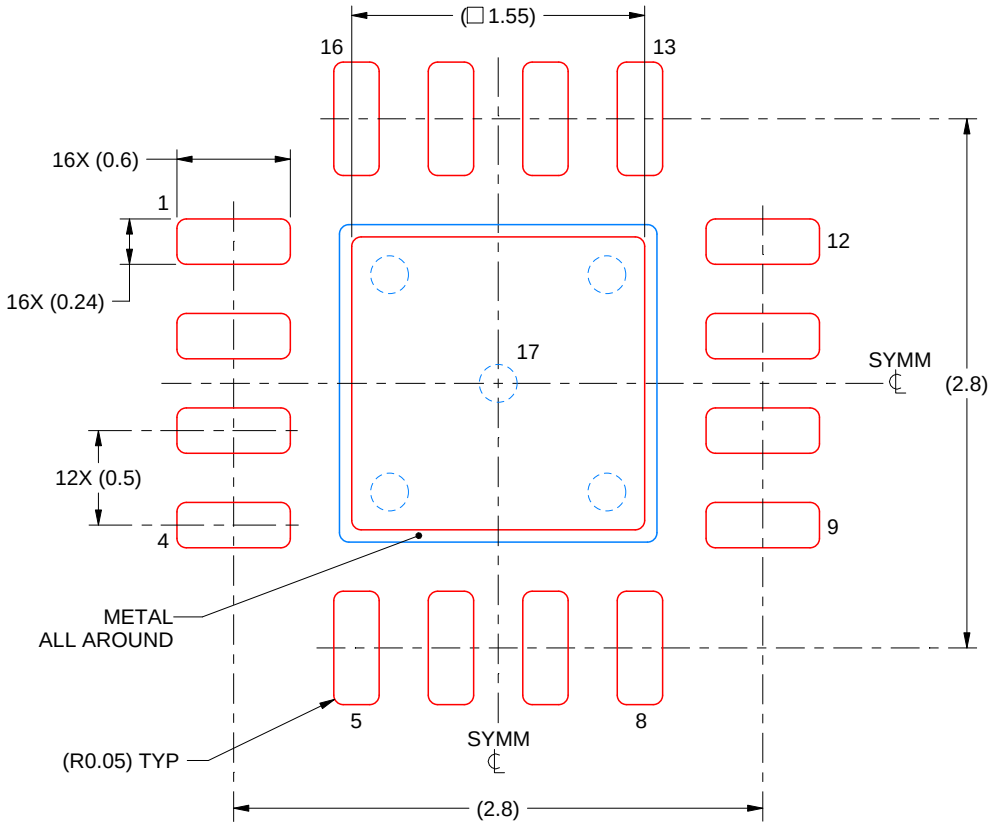

SOLDER PASTE EXAMPLE
BASED ON 0.125 mm THICK STENCIL

EXPOSED PAD 17:
85% PRINTED SOLDER COVERAGE BY AREA UNDER PACKAGE
SCALE:25X

4219117/B 04/2022

NOTES: (continued)

6. Laser cutting apertures with trapezoidal walls and rounded corners may offer better paste release. IPC-7525 may have alternate design recommendations.

IMPORTANT NOTICE AND DISCLAIMER

TI PROVIDES TECHNICAL AND RELIABILITY DATA (INCLUDING DATASHEETS), DESIGN RESOURCES (INCLUDING REFERENCE DESIGNS), APPLICATION OR OTHER DESIGN ADVICE, WEB TOOLS, SAFETY INFORMATION, AND OTHER RESOURCES “AS IS” AND WITH ALL FAULTS, AND DISCLAIMS ALL WARRANTIES, EXPRESS AND IMPLIED, INCLUDING WITHOUT LIMITATION ANY IMPLIED WARRANTIES OF MERCHANTABILITY, FITNESS FOR A PARTICULAR PURPOSE OR NON-INFRINGEMENT OF THIRD PARTY INTELLECTUAL PROPERTY RIGHTS.

These resources are intended for skilled developers designing with TI products. You are solely responsible for (1) selecting the appropriate TI products for your application, (2) designing, validating and testing your application, and (3) ensuring your application meets applicable standards, and any other safety, security, regulatory or other requirements.

These resources are subject to change without notice. TI grants you permission to use these resources only for development of an application that uses the TI products described in the resource. Other reproduction and display of these resources is prohibited. No license is granted to any other TI intellectual property right or to any third party intellectual property right. TI disclaims responsibility for, and you fully indemnify TI and its representatives against any claims, damages, costs, losses, and liabilities arising out of your use of these resources.

TI’s products are provided subject to TI’s Terms of Sale, TI’s General Quality Guidelines, or other applicable terms available either on ti.com or provided in conjunction with such TI products. TI’s provision of these resources does not expand or otherwise alter TI’s applicable warranties or warranty disclaimers for TI products. Unless TI explicitly designates a product as custom or customer-specified, TI products are standard, catalog, general purpose devices.

TI objects to and rejects any additional or different terms you may propose.

Copyright © 2026, Texas Instruments Incorporated

Last updated 10/2025

ENTEGRECİ

Bu belge www.entegreci.com üzerinden sunulmaktadır.

Elektronik komponent tedarikinde Entegreci

Entegreci, Eskişehir merkezli, Türkiye geneline satış yapan bir elektronik komponent mağazasıdır. Entegreler (IC), mikrodenetleyiciler, transistörler, diyotlar, pasif elemanlar, konnektörler, modüller ve geliştirme kartları tek adetten seri üretim adetlerine kadar satılır. Ürün sayfalarında güncel stok durumunu, fiyatı ve datasheet bağlantısını bulabilirsiniz.

Parça koduyla arama

Üretici parça numarasını yazın; stok ve fiyatı hemen görün.

www.entegreci.com

Ürün kategorileri

Entegreden kapasitöre tüm elektronik komponent kategorileri.

Kategorilere göz atın

Üreticiler

Aradığınız üreticinin ürünlerini tek sayfada inceleyin.

Üreticileri görün

Toplu alım ve teklif

Listede olmayan ya da yüksek adetli parçalar için teklif isteyin.

Teklif isteyin

www.entegreci.com | **destek@entegreci.com** | **0850 305 90 34**

Entegreci is an online electronic components store based in Türkiye. Search by manufacturer part number to see stock, prices and datasheets for integrated circuits, microcontrollers, transistors, passive components and connectors, or request a quote for parts that are not listed.

Bu sayfa Entegreci tarafından eklenmiştir. Belgenin önceki sayfaları asıl yayıncısına aittir ve içeriği değiştirilmemiştir; en güncel sürüm için belgenin yayıncısına başvurun.