Ordering number : ENA1820

# BMS4007

## N-Channel Power MOSFET
## 75V, 60A, 7.8mΩ, TO-220ML(LS)

ON Semiconductor®
http://onsemi.com

### Features

- ON-resistance $R_{DS}(on)$=6mΩ (typ.)
- Input capacitance Ciss=9700pF (typ.)
- 10V drive

### Specifications

**Absolute Maximum Ratings** at Ta=25°C

| Parameter | Symbol | Conditions | Ratings | Unit |
|---|---|---|---|---|
| Drain-to-Source Voltage | $V_{DSS}$ | | 75 | V |
| Gate-to-Source Voltage | $V_{GSS}$ | | ±20 | V |
| Drain Current (DC) | $I_D$ | | 60 | A |
| Drain Current (Pulse) | $I_{DP}$ | PW≤10μs, duty cycle≤1% | 240 | A |
| Allowable Power Dissipation | $P_D$ | | 2.0 | W |
| | | Tc=25°C | 30 | W |
| Channel Temperature | Tch | | 150 | °C |
| Storage Temperature | Tstg | | −55 to +150 | °C |
| Avalanche Energy (Single Pulse) *1 | $E_{AS}$ | | 299 | mJ |
| Avalanche Current *2 | $I_{AV}$ | | 48 | A |

Note :*1 $V_{DD}$=48V, L=100μH, $I_{AV}$=48A (Fig.1)
*2 L≤100μH, Single pulse

Stresses exceeding Maximum Ratings may damage the device. Maximum Ratings are stress ratings only. Functional operation above the Recommended Operating Conditions is not implied. Extended exposure to stresses above the Recommended Operating Conditions may affect device reliability.

### Package Dimensions

unit : mm (typ)
7525-002

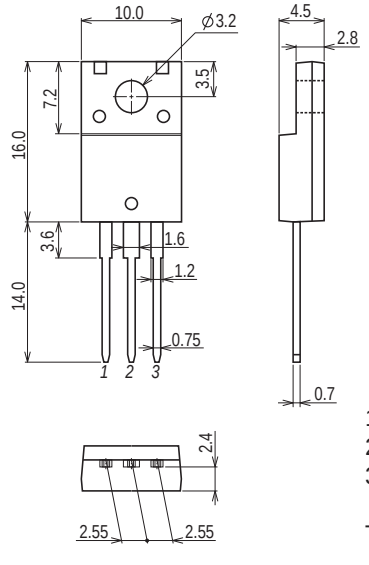


1 : Gate
2 : Drain
3 : Source

TO-220ML(LS)

### Product & Package Information

- Package : TO-220ML(LS)
- JEITA, JEDEC : SC-67, SOT-186A
- Minimum Packing Quantity : 100 pcs./bag or 50pcs./magazine

### Marking

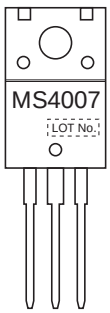


### Electrical Connection

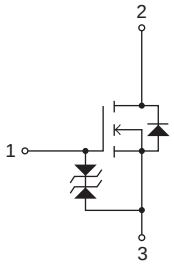

## Electrical Characteristics at Ta=25°C

| Parameter | Symbol | Conditions | Ratings | | | Unit |
|---|---|---|---|---|---|---|
| | | | min | typ | max | |
| Drain-to-Source Breakdown Voltage | $V_{(BR)DSS}$ | $I_D$=1mA, $V_{GS}$=0V | 75 | | | V |
| Zero-Gate Voltage Drain Current | $I_{DSS}$ | $V_{DS}$=75V, $V_{GS}$=0V | | | 10 | μA |
| Gate-to-Source Leakage Current | $I_{GSS}$ | $V_{GS}$=±16V, $V_{DS}$=0V | | | ±10 | μA |
| Cutoff Voltage | $V_{GS}$(off) | $V_{DS}$=10V, $I_D$=1mA | 2 | | 4 | V |
| Forward Transfer Admittance | \| yfs \| | $V_{DS}$=10V, $I_D$=30A | | 110 | | S |
| Static Drain-to-Source On-State Resistance | $R_{DS}$(on) | $I_D$=30A, $V_{GS}$=10V | | 6 | 7.8 | mΩ |
| Input Capacitance | Ciss | $V_{DS}$=20V, f=1MHz | | 9700 | | pF |
| Output Capacitance | Coss | | | 540 | | pF |
| Reverse Transfer Capacitance | Crss | | | 360 | | pF |
| Turn-ON Delay Time | $t_d$(on) | See Fig.2 | | 100 | | ns |
| Rise Time | $t_r$ | | | 180 | | ns |
| Turn-OFF Delay Time | $t_d$(off) | | | 460 | | ns |
| Fall Time | $t_f$ | | | 160 | | ns |
| Total Gate Charge | Qg | $V_{DS}$=48V, $V_{GS}$=10V, $I_D$=60A | | 160 | | nC |
| Gate-to-Source Charge | Qgs | | | 40 | | nC |
| Gate-to-Drain “Miller” Charge | Qgd | | | 40 | | nC |
| Diode Forward Voltage | $V_{SD}$ | $I_S$=60A, $V_{GS}$=0V | | 0.9 | 1.2 | V |
| Reverse Recovery Time | $t_{rr}$ | See Fig.3 | | 70 | | ns |
| Reverse Recovery Charge | $Q_{rr}$ | $I_S$=60A, $V_{GS}$=0V, di/dt=100A/μs | | 183 | | nC |

### Fig.1 Avalanche Resistance Test Circuit

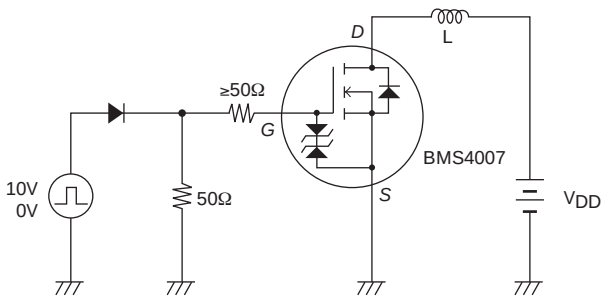


### Fig.2 Switching Time Test Circuit

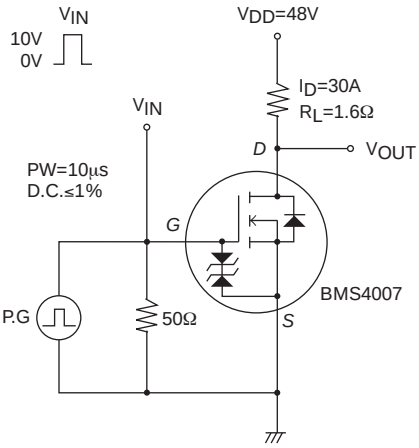


### Fig.3 Reverse Recovery Time Test Circuit

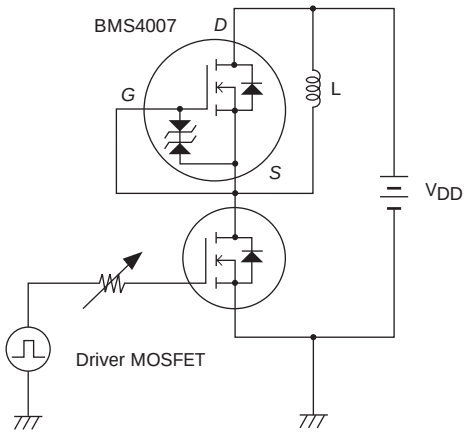

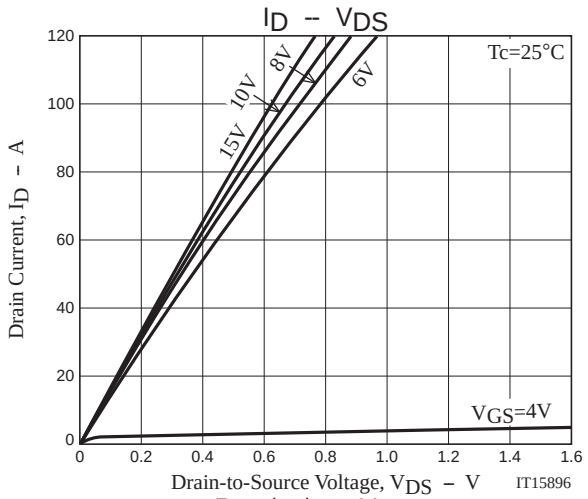
ID -- VDS
Tc=25°C
10V
8V
6V
15V
VGS=4V
Drain Current, ID – A
Drain-to-Source Voltage, VDS – V
IT15896

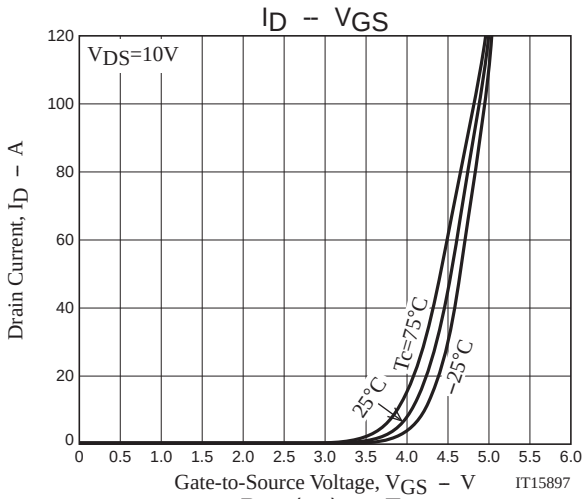
ID -- VGS
VDS=10V
Tc=75°C
25°C
–25°C
Drain Current, ID – A
Gate-to-Source Voltage, VGS – V
IT15897

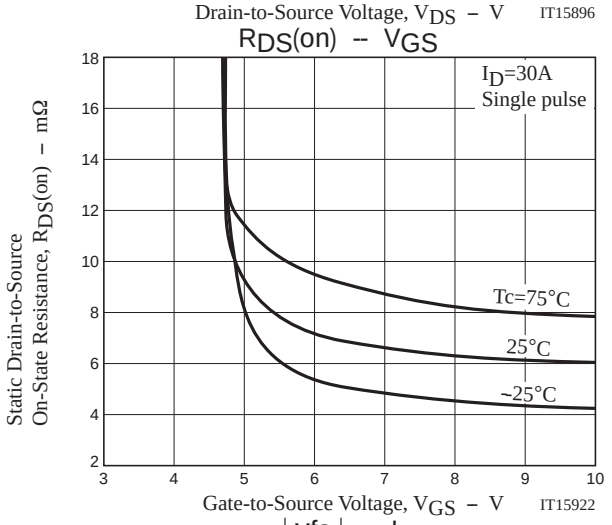
RDS(on) -- VGS
ID=30A
Single pulse
Tc=75°C
25°C
–25°C
Static Drain-to-Source On-State Resistance, RDS(on) – mΩ
Gate-to-Source Voltage, VGS – V
IT15922

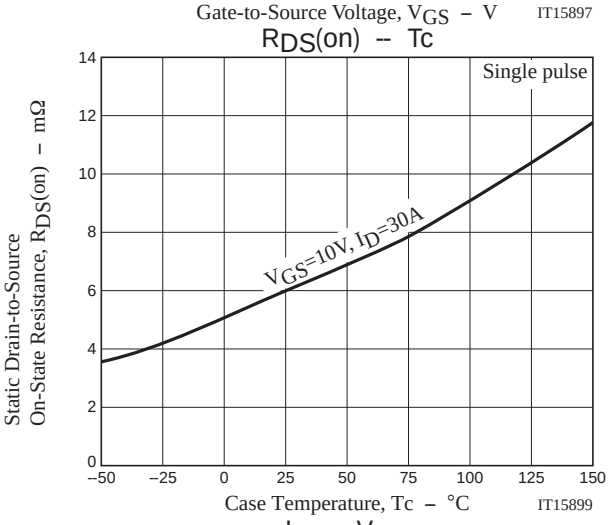
RDS(on) -- Tc
Single pulse
VGS=10V, ID=30A
Static Drain-to-Source On-State Resistance, RDS(on) – mΩ
Case Temperature, Tc – °C
IT15899

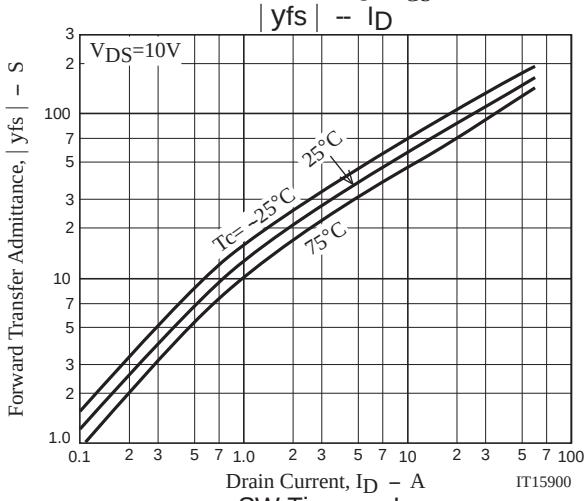
| yfs | -- ID
VDS=10V
25°C
Tc= –25°C
75°C
Forward Transfer Admittance, | yfs | – S
Drain Current, ID – A
IT15900

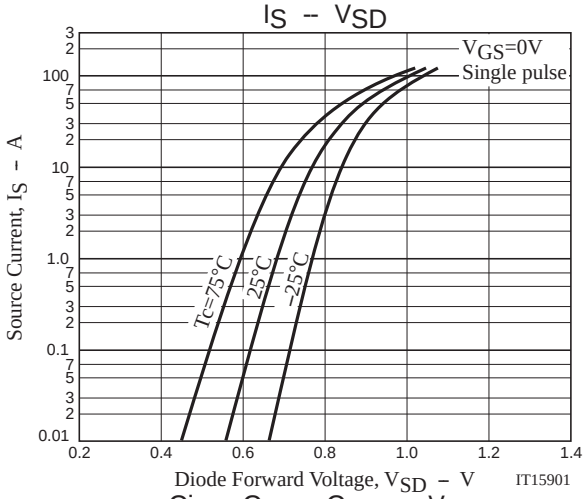
IS -- VSD
VGS=0V
Single pulse
Tc=75°C
25°C
–25°C
Source Current, IS – A
Diode Forward Voltage, VSD – V
IT15901

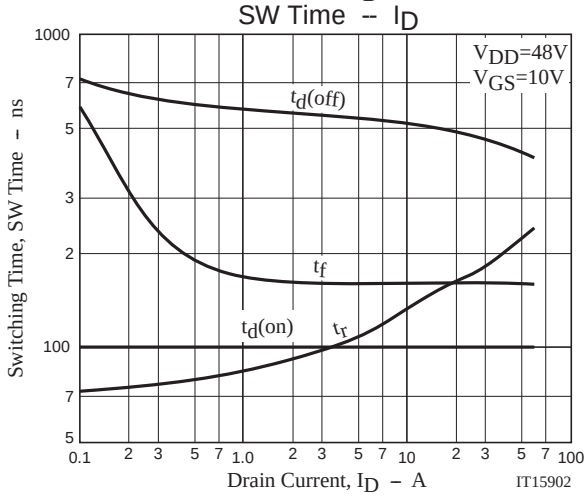
SW Time -- ID
VDD=48V
VGS=10V
td(off)
tf
td(on)
tr
Switching Time, SW Time – ns
Drain Current, ID – A
IT15902

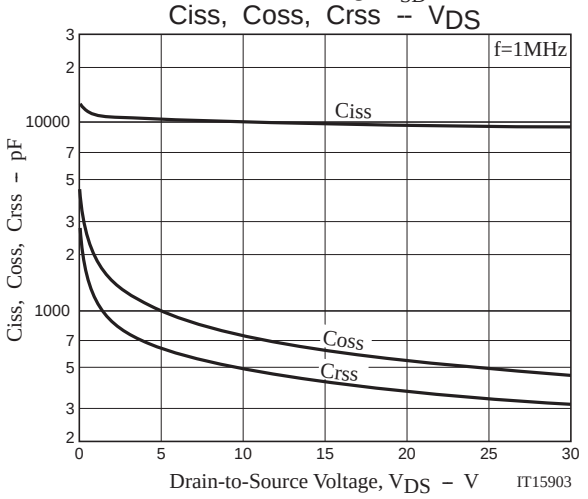
Ciss, Coss, Crss -- VDS
f=1MHz
Ciss
Coss
Crss
Ciss, Coss, Crss – pF
Drain-to-Source Voltage, VDS – V
IT15903

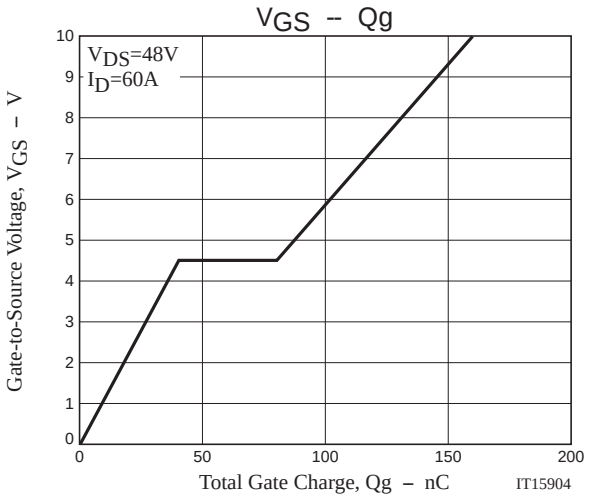
VGS – Qg
VDS=48V
ID=60A
Gate-to-Source Voltage, VGS – V
Total Gate Charge, Qg – nC
IT15904

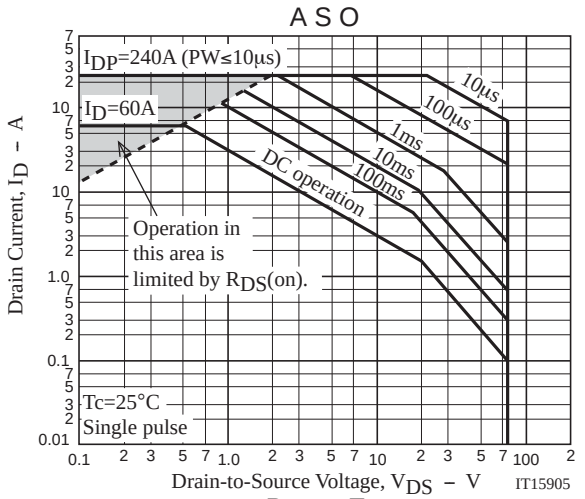
A S O
IDP=240A (PW≤10μs)
ID=60A
10μs
100μs
1ms
10ms
100ms
DC operation
Operation in this area is limited by RDS(on).
Tc=25°C
Single pulse
Drain Current, ID – A
Drain-to-Source Voltage, VDS – V
IT15905

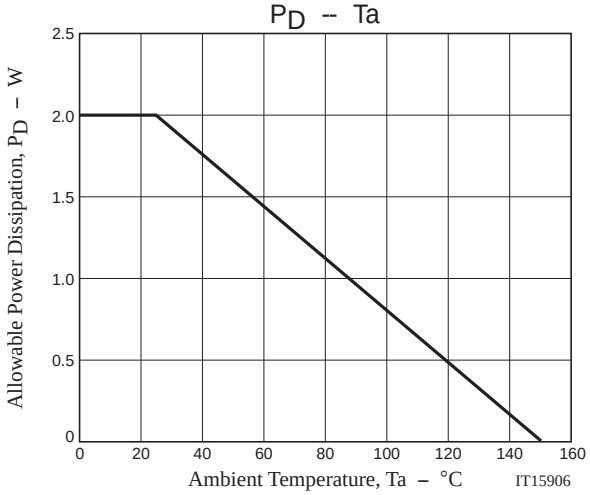
PD – Ta
Allowable Power Dissipation, PD – W
Ambient Temperature, Ta – °C
IT15906

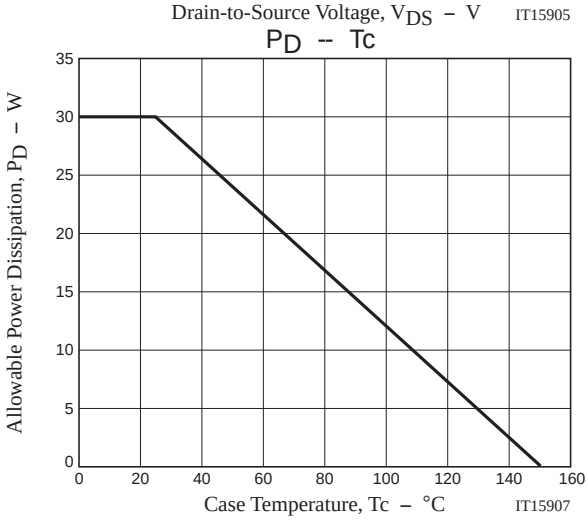
PD – Tc
Allowable Power Dissipation, PD – W
Case Temperature, Tc – °C
IT15907

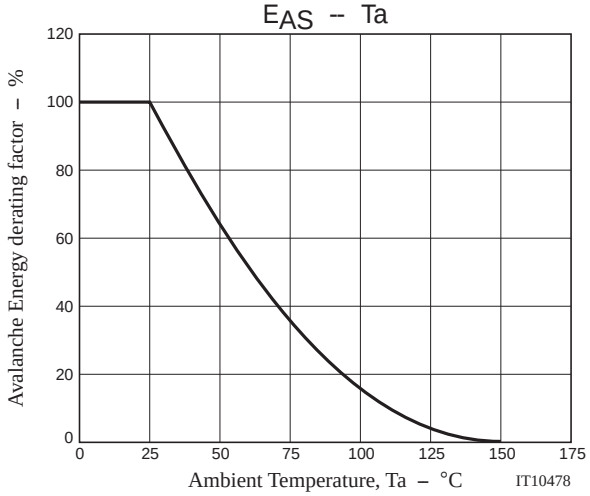
EAS – Ta
Avalanche Energy derating factor – %
Ambient Temperature, Ta – °C
IT10478

Note on usage : Since the BMS4007 is a MOSFET product, please avoid using this device in the vicinity of highly charged objects.

ON Semiconductor and the ON logo are registered trademarks of Semiconductor Components Industries, LLC (SCILLC). SCILLC owns the rights to a number of patents, trademarks, copyrights, trade secrets, and other intellectual property. A listing of SCILLC's product/patent coverage may be accessed at www.onsemi.com/site/pdf/Patent-Marking.pdf. SCILLC reserves the right to make changes without further notice to any products herein. SCILLC makes no warranty, representation or guarantee regarding the suitability of its products for any particular purpose, nor does SCILLC assume any liability arising out of the application or use of any product or circuit, and specifically disclaims any and all liability, including without limitation special, consequential or incidental damages. "Typical" parameters which may be provided in SCILLC data sheets and/or specifications can and do vary in different applications and actual performance may vary over time. All operating parameters, including "Typicals" must be validated for each customer application by customer's technical experts. SCILLC does not convey any license under its patent rights nor the rights of others. SCILLC products are not designed, intended, or authorized for use as components in systems intended for surgical implant into the body, or other applications intended to support or sustain life, or for any other application in which the failure of the SCILLC product could create a situation where personal injury or death may occur. Should Buyer purchase or use SCILLC products for any such unintended or unauthorized application, Buyer shall indemnify and hold SCILLC and its officers, employees, subsidiaries, affiliates, and distributors harmless against all claims, costs, damages, and expenses, and reasonable attorney fees arising out of, directly or indirectly, any claim of personal injury or death associated with such unintended or unauthorized use, even if such claim alleges that SCILLC was negligent regarding the design or manufacture of the part. SCILLC is an Equal Opportunity/Affirmative Action Employer. This literature is subject to all applicable copyright laws and is not for resale in any manner.

ENTEGRECİ

Bu belge www.entegreci.com üzerinden sunulmaktadır.

# Elektronik komponent tedarikinde Entegreci

Entegreci, Eskişehir merkezli, Türkiye geneline satış yapan bir elektronik komponent mağazasıdır. Entegreler (IC), mikrodenetleyiciler, transistörler, diyotlar, pasif elemanlar, konnektörler, modüller ve geliştirme kartları tek adetten seri üretim adetlerine kadar satılır. Ürün sayfalarında güncel stok durumunu, fiyatı ve datasheet bağlantısını bulabilirsiniz.

### Parça koduyla arama

Üretici parça numarasını yazın; stok ve fiyatı hemen görün.

**www.entegreci.com**

### Ürün kategorileri

Entegreden kapasitöre tüm elektronik komponent kategorileri.

**Kategorilere göz atın**

### Üreticiler

Aradığınız üreticinin ürünlerini tek sayfada inceleyin.

**Üreticileri görün**

### Toplu alım ve teklif

Listede olmayan ya da yüksek adetli parçalar için teklif isteyin.

**Teklif isteyin**

**www.entegreci.com** | **destek@entegreci.com** | **0850 305 90 34**

Entegreci is an online electronic components store based in Türkiye. Search by manufacturer part number to see stock, prices and datasheets for integrated circuits, microcontrollers, transistors, passive components and connectors, or request a quote for parts that are not listed.

Bu sayfa Entegreci tarafından eklenmiştir. Belgenin önceki sayfaları asıl yayıncısına aittir ve içeriği değiştirilmemiştir; en güncel sürüm için belgenin yayıncısına başvurun.