UMW IRLL014NTR

55V N-Channel MOSFET

1.Description

The SOT-223 package is designed for surface mountusing vapor phase , infra red , or wave soldering techniquests unique package design allows for easy automatic pickand-place as with other packages but hasthe added advantage of improved thermal performancedue to an enlarged tab for heatsinking . Power dissipationof 1 . OW is possible in a typical surface mount application

2.Features

- $V_{DS\ (V)}$=55V
- I_D=2A
- $R_{DS(ON)}$<140mΩ(V_{GS}=10V)
- Surface Mount
- Advanced Process Technology
- Ultra Low On-resistance
- Dynamic dv / dt Rating
- Fast Switching

3.Pinning information

Pin	Symbol	Description
1	G	GATE
2	D	DRAIN
3	S	SOURCE

SOT-223 top view

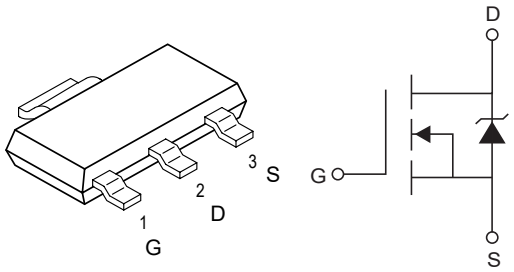

4.Absolute Maximum Ratings T_A=25°C unless otherwise noted

Parameter		Symbol	Rating	Units
Continuous Drain Current, V_{GS} @ 10V**	T_A=25°C	I_D	2.8	A
Continuous Drain Current, V_{GS}10V*	T_A=25°C		2	A
Continuous Drain Current, V_{GS}10V*	T_A=70°C		1.6	A
Pulsed Drain Current ①		I_{DM}	16	A
Power Dissipation(PcB Mount)**	T_A=25°C	P_D	2.1	W
Power Dissipation(PCB Mount)*	T_A=25°C		1	W
Linear Derating Factor (PCB Mount)*			8.3	mW°C
Gate-to-Source Voltage		V_{GS}	±16	V
Single Pulse Avalanche Energy②		E_{AS}	32	mJ

Avalanche Current①	I_{AR}	2	A
Repetitive Avalanche Energy①*	E_{AR}	0.1	mJ
Peak Diode Recovery dv/dt ③	dv/dt	7.2	V/ns
Junction and Storage Temperature Range	T_J, T_{STG}	-55 to 150	°C

5.Thermal resistance rating

Parameter	Symbol	Typ	Max	Units
Junction-to-Amb. (PCB Mount, Steady State)*	$R_{\theta JA}$	90	120	°C/W
Junction-to-Amb. (PCB Mount, Steady State)**	$R_{\theta JA}$	50	60	°C/W

6.Electrical Characteristics T_J=25°C

Parameter	Symbol	Conditions	Min	Typ	Max	Units
Drain-to-Source Breakdown Voltage	$V_{(BR)DSS}$	I_D=250μA, V_{GS}=0V	55			V
Breakdown Voltage Temp. Coefficient	$\Delta V_{(BR)DSS}/\Delta T_J$	Reference to 25°C,I_D=1mA		0.015		V/°C
Static Drain-to-Source On-Resistance	$R_{DS(ON)}$	V_{GS}=10V, I_D=2A ④			140	mΩ
		V_{GS}=5V, I_D=1.2A ④			200	mΩ
		V_{GS}=4V, I_D=1A ④			280	mΩ
Gate Threshold Voltage	$V_{GS(th)}$	V_{DS}=V_{GS}, I_D=250μA	1		2	V
Forward Transconductance	g_{FS}	V_{DS}=25V, I_D=1A	2.3			S
Drain-to-Source Leakage Current	I_{DSS}	V_{DS}=55V, V_{GS}=0V			25	μA
		V_{DS}=44V, V_{GS}=0V, T_J=150°C			250	μA
Gate-to-Source Forward Leakage	I_{GSS}	V_{GS}=16V			100	nA
Gate-to-Source Reverse Leakage		V_{GS}=-16V			-100	nA
Total Gate Charge	Q_g	I_D=2A,V_{DS}=44V,V_{GS}=10V See Fig. 6 and 11 ④		9.5	14	nC
Gate-to-Source Charge	Q_{gs}			1.1	1.7	nC
Gate-to-Drain ("Miller") Charge	Q_{gd}			3	4.4	nC
Tum-On Delay Time	$t_{D(on)}$	V_{DD}=28V, I_D=2A, R_G=6Ω R_D=14Ω, See Fig. 12 ④		5.1		ns
Rise Time	t_r			4.9		ns
Turn-Off Delay Time	$t_{D(off)}$			14		ns
Fall Time	t_f			2.9		ns
Input Capacitance	C_{iss}	V_{GS}=0V, V_{DS}=25V, f=1MHz See Fig. 5		230		pF
Output Capacitance	C_{oss}			66		pF
Reverse Transfer Capacitance	I_s			30		pF

Continuous Source Current (Body Diode)	C_{rss}	MOSFET symbol showing the integral reverse p-n junction diode.			1.3	A
Pulsed Source Current (Body Diode)①	I_{SM}				16	
Diode Forward Voltage	V_{SD}	T_J=25°C,I_S=2A,V_{GS}=0V ④			1	V
Reverse Recovery Time	t_{rr}	T_J=25°C, I_F=2A		41	61	ns
Reverse Recovery Charge	Q_{rr}	dI/dt=100A/μs ④		73	110	nC
Forward Turn-On Time	t_{on}	Intrinsic turn-on time is negligible (turn-on is dominated by L_S+L_D)				

Notes:

① Repetitive rating; pulse width limited by max. junction temperature.(See fig.9)

② V_{DD}= 25V, starting T_J= 25°C,L= 4.0mH, R_G= 25Ω, I_{AS}= 4.0A.(See Figure 13)

③ I_{SD}≤ 2.0A, di/dt ≤ 170A/μs, V_{DD}≤ $V_{(BR)DSS}$, T_J≤ 150°C

④ Pulse width ≤ 300μs; duty cycle ≤ 2%.

7.1Typical Characterisitics

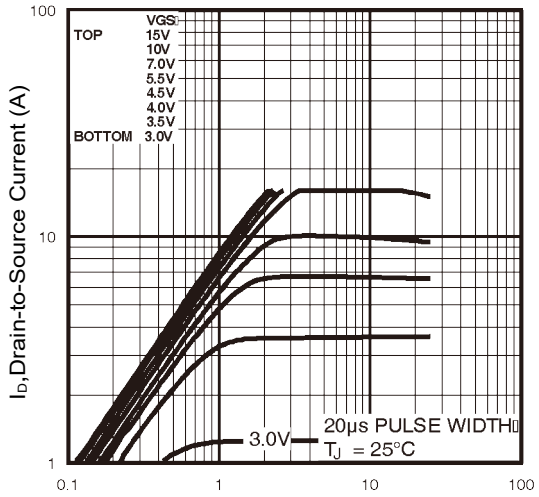

V_{DS},Drain-to-Source Voltage (V)

Figure 1: Typical Output Characteristics

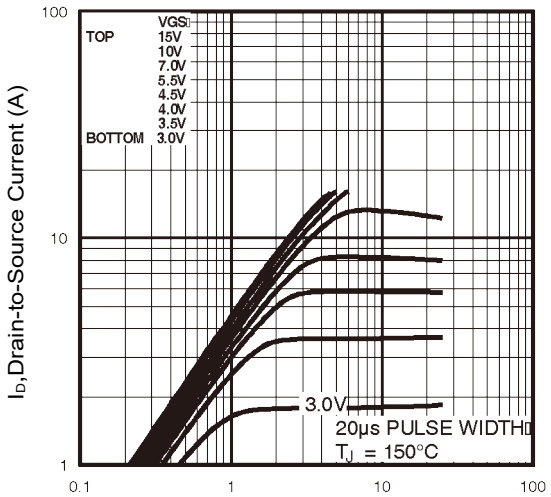

V_{DS},Drain-to-Source Voltage (V)

Figure 2: Typical Output Characteristics

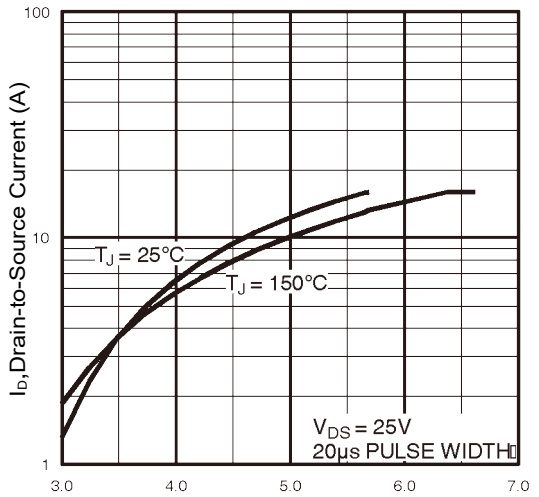

V_{GS}, Gate-to-Source Voltage (V)

Figure 3: Typical Transfer Characteristics

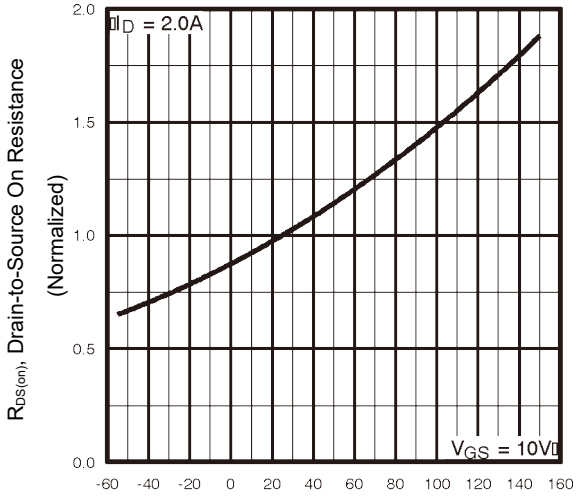

T_J, Junction Temperature (°C)

Figure 4: Nomalized On-ResistanceVs. Temperature

7.2Typical Characterisitics

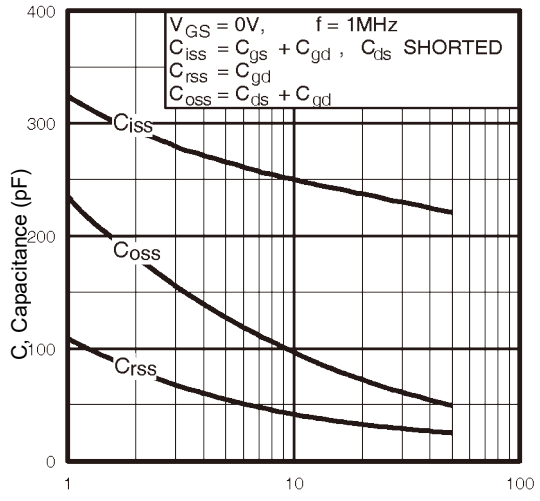

V_{DS} ,Drain-to-Source Voltage (V)

Figure 5: Typical Capacitance Vs. Drain-to-Source Voltage

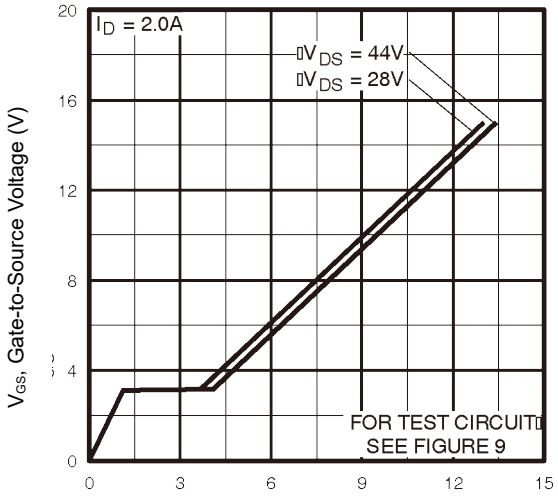

Q_G, Total Gate Charge (nC)

Figure 6: Typical Gate Charge Vs. Gate-to-Source Voltage

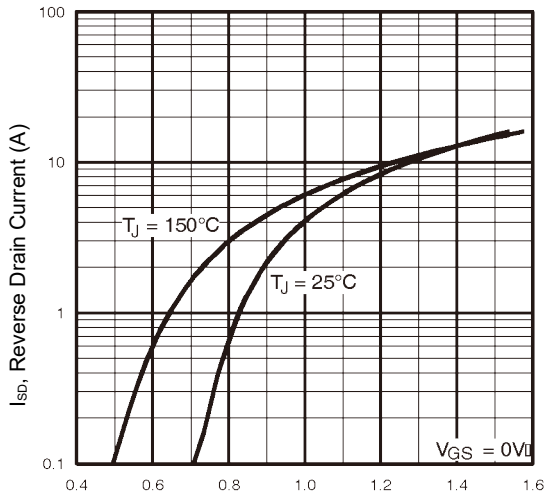

V_{SD}, Source-to-Drain Voltage (V)

Figure 7: Typical Source-Drain Diode Forward Voltage

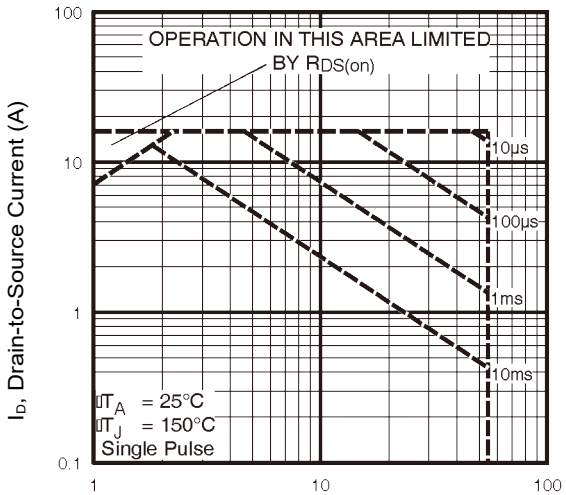

V_{DS}, Drain-to-Source Voltage (V)

Figure 8: Maximum Safe Operating Area

7.3Typical Characterisitics

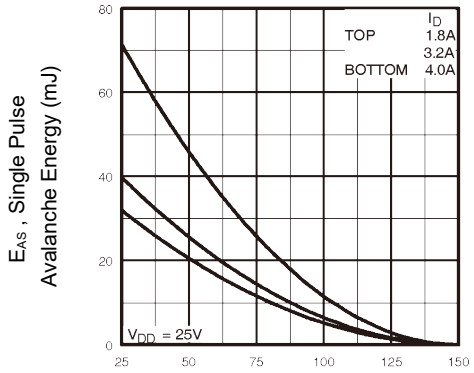

Figure 9: Maximum Avalanche Energy Vs. Drain Current

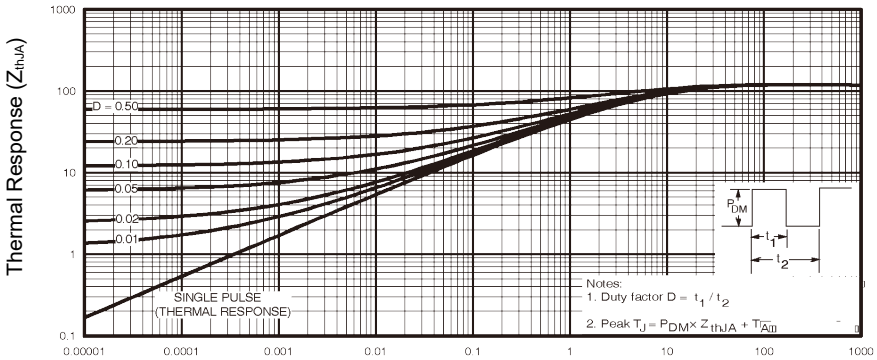

Figure 10: Maximum Effective Transient Thermal Impedance, Junction-to-Ambient

7.4Typical Characterisitics

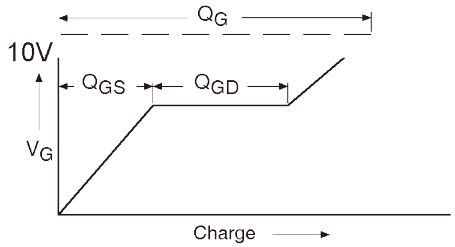

Figure 11a: Basic Gate Charge waveform

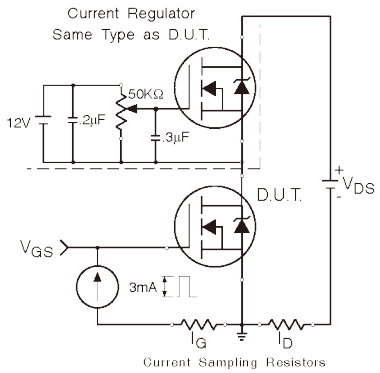

Figure 11b: Switching Time Test Circuit

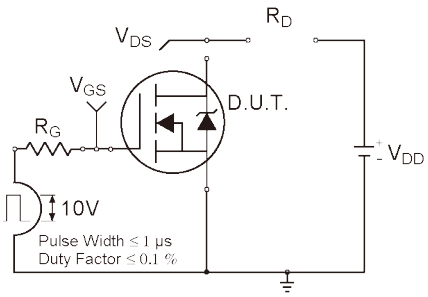

Figure 12a: Gate Charge Test Circuit

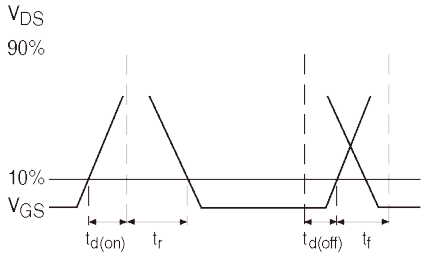

Figure 12b: Switching Time waveforms

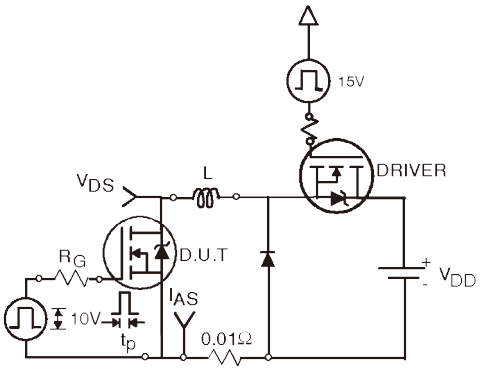

Figure 13a: Unclamped Inductive Test Circuit

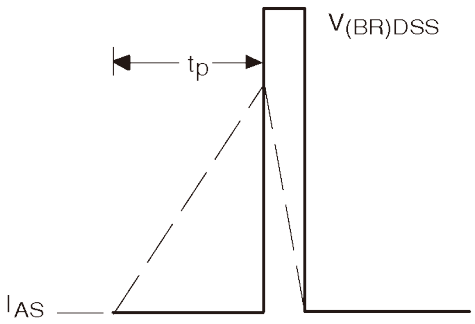

Figure 13b: Unclamped Inductive waveforms

8.SOT-223 Package Outline Dimensions

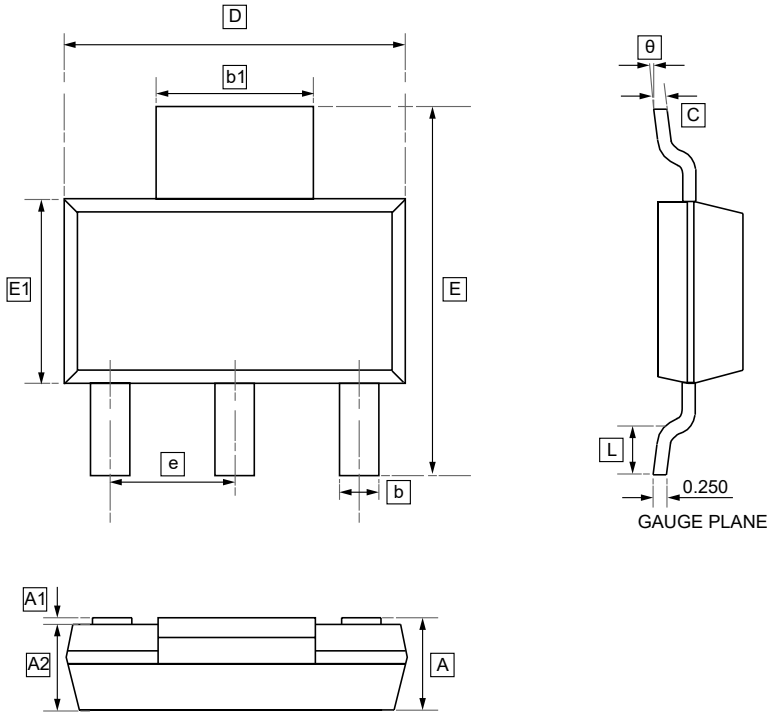

DIMENSIONS (mm are the original dimensions)

Symbol	A	A1	A2	b	b1	c	D	E	E1	e	L	θ
Min	-	0.020	1.500	0.660	2.900	0.230	6.300	6.700	3.300	2.300	0.750	0°
Max	1.800	0.100	1.700	0.840	3.100	0.350	6.700	7.300	3.700	BSC	-	10°

9.Ordering information

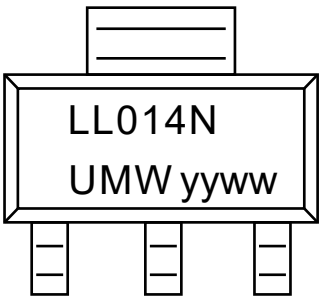

yy: Year Code
ww: Week Code

Order Code	Package	Base QTY	Delivery Mode
UMW IRLL014NTR	SOT-223	2500	Tape and reel

10.Disclaimer

UMW reserves the right to make changes to all products, specifications. Customers should obtain the latest version of product documentation and verify the completeness and currency of the information before placing an order.

When applying our products, please do not exceed the maximum rated values, as this may affect the reliability of the entire system. Under certain conditions, any semiconductor product may experience faults or failures. Buyers are responsible for adhering to safety standards and implementing safety measures during system design, prototyping, and manufacturing when using our products to prevent potential failure risks that could lead to personal injury or property damage.

Unless explicitly stated in writing, UMW products are not intended for use in medical, life-saving, or life-sustaining applications, nor for any other applications where product failure could result in personal injury or death. If customers use or sell the product for such applications without explicit authorization, they assume all associated risks.

When reselling, applying, or exporting, please comply with export control laws and regulations of China, the United States, the United Kingdom, the European Union, and other relevant countries, regions, and international organizations.

This document and any actions by UMW do not grant any intellectual property rights, whether express or implied, by estoppel or otherwise. The product names and marks mentioned herein may be trademarks of their respective owners.

ENTEGRECİ

Bu belge www.entegreci.com üzerinden sunulmaktadır.

Elektronik komponent tedarikinde Entegreci

Entegreci, Eskişehir merkezli, Türkiye geneline satış yapan bir elektronik komponent mağazasıdır. Entegreler (IC), mikrodenetleyiciler, transistörler, diyotlar, pasif elemanlar, konnektörler, modüller ve geliştirme kartları tek adetten seri üretim adetlerine kadar satılır. Ürün sayfalarında güncel stok durumunu, fiyatı ve datasheet bağlantısını bulabilirsiniz.

Parça koduyla arama

Üretici parça numarasını yazın; stok ve fiyatı hemen görün.

www.entegreci.com

Ürün kategorileri

Entegreden kapasitöre tüm elektronik komponent kategorileri.

Kategorilere göz atın

Üreticiler

Aradığınız üreticinin ürünlerini tek sayfada inceleyin.

Üreticileri görün

Toplu alım ve teklif

Listede olmayan ya da yüksek adetli parçalar için teklif isteyin.

Teklif isteyin

www.entegreci.com | **destek@entegreci.com** | **0850 305 90 34**

Entegreci is an online electronic components store based in Türkiye. Search by manufacturer part number to see stock, prices and datasheets for integrated circuits, microcontrollers, transistors, passive components and connectors, or request a quote for parts that are not listed.

Bu sayfa Entegreci tarafından eklenmiştir. Belgenin önceki sayfaları asıl yayıncısına aittir ve içeriği değiştirilmemiştir; en güncel sürüm için belgenin yayıncısına başvurun.