Product Summary

$V_{(BR)DSS}$	$R_{DS(on)\ max}$	I_D T_A = +25°C (Note 6)
-100V	150mΩ@ V_{GS} = -10V	-5.9A
	190mΩ@ V_{GS} =-6V	-5.1A

Description

This new generation trench MOSFET from Zetex features a unique structure combining the benefits of low on-resistance and fast switching, making it ideal for high efficiency power management applications.

Applications

- DC-DC Converters
- Power Management Functions
- Disconnect Switches
- Motor Control

Features and Benefits

- Low On-Resistance
- Fast Switching Speed
- Low Threshold
- Low Gate Drive
- DPAK Package
- **Totally Lead-Free & Fully RoHS Compliant (Notes 1 & 2)**
- **Halogen and Antimony Free. "Green" Device (Note 3)**
- **Qualified to AEC-Q101 Standards for High Reliability**

Mechanical Data

- Case: TO252 (DPAK)
- Case Material: Molded Plastic, "Green" Molding Compound. UL Flammability Classification Rating 94V-0 (Note 1)
- Moisture Sensitivity: Level 1 per J-STD-020
- Terminals Connections: See diagram below
- Terminals: Finish - Matte Tin Annealed over Copper Leadframe. Solderable per MIL-STD-202, Method 208 e3
- Weight: 0.315 grams (Approximate)

TO252



Top View

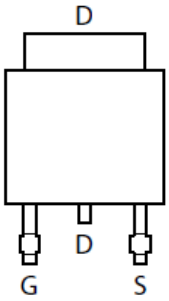

Top View
Pin Out

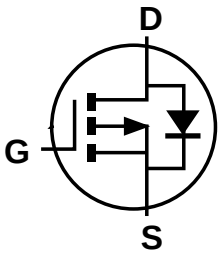

Equivalent circuit

Ordering Information (Note 4)

Part Number	Compliance	Case	Packaging
ZXMP10A18KTC	Standard	TO252	2,500/Tape & Reel

Notes:
1. No purposely added lead. Fully EU Directive 2002/95/EC (RoHS) & 2011/65/EU (RoHS 2) compliant.
2. See http://www.diodes.com/quality/lead_free.html com for more information about Diodes Incorporated's definitions of Halogen- and Antimony-free, "Green" and Lead-free.
3. Halogen- and Antimony-free "Green" products are defined as those which contain <900ppm bromine, <900ppm chlorine (<1500ppm total Br + Cl) and <1000ppm antimony compounds.
4. For packaging details, go to our website at http://www.diodes.com/products/packages.html.

Marking Information

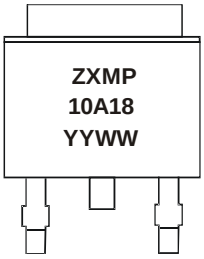

ZXMP10A18 = Product Type Marking Code
YYWW = Date Code Marking
YY = Year (ex: 10 = 2010)
WW = Week (01 - 53)

© Diodes Incorporated

Maximum Ratings (@T_A = +25°C, unless otherwise specified.)

Characteristic		Symbol	Value	Units
Drain-Source Voltage		V_{DSS}	-100	V
Gate-Source Voltage		V_{GSS}	±20	V
Continuous Drain Current	T_A = +25°C (Note 6)	I_D	-5.9	A
	T_A = +70°C (Note 6)		-4.7	
	T_A = +25°C (Note 5)		-3.8	
Pulsed Drain Current (Note 7)		I_{DM}	-21.1	A
Continuous Source Current (Body Diode) (Note 6)		I_S	-10	A
Pulsed Source Current (Body Diode) (Note 7)		I_{SM}	-21.1	A

Thermal Characteristics (@T_A = +25°C, unless otherwise specified.)

Characteristic		Symbol	Value	Units
Total Power Dissipation (Note 5) Linear Derating Factor	T_A = +25°C (Note 5)	P_D	4.3	W
			34.4	mW/°C
	T_A = +25°C (Note 6)		10.2	W
			81.3	mW/°C
	T_A = +25°C (Note 8)		2.17	W
			17.4	mW/°C
Thermal Resistance, Junction to Ambient	(Note 5)	$R_{\theta JA}$	29	°C/W
	(Note 6)		12.3	
	(Note 8)		57.6	
Operating and Storage Temperature Range		T_J, T_{STG}	-55 to +150	°C

Notes:
5. For a device surface mounted on 50mm x 50mm x 1.6mm FR4 PCB with high coverage of single sided 2oz copper, in still air conditions.
6. For a device surface mounted on FR4 PCB measured at t ≤10 sec.
7. Repetitive rating on 50mm x 50mm x 1.6mm FR4 PCB, D=0.02, pulse width=300µs – pulse width limited by maximum junction temperature.
8. For a device surface mounted on 25mm x 25mm x 1.6mm FR4 PCB with high coverage of single sided 1oz copper, in still air conditions.

Thermal characteristics

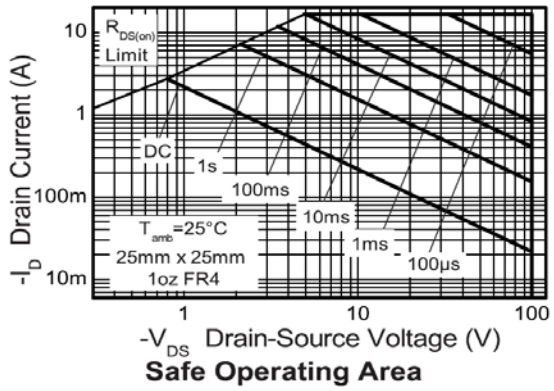

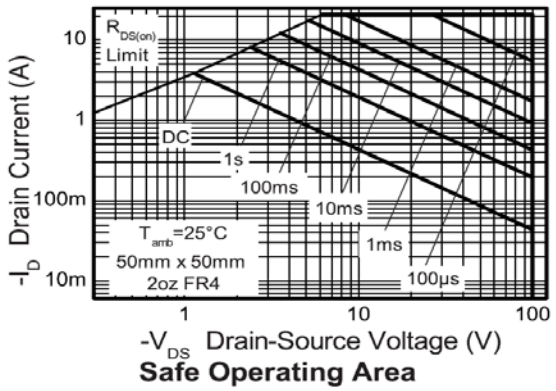

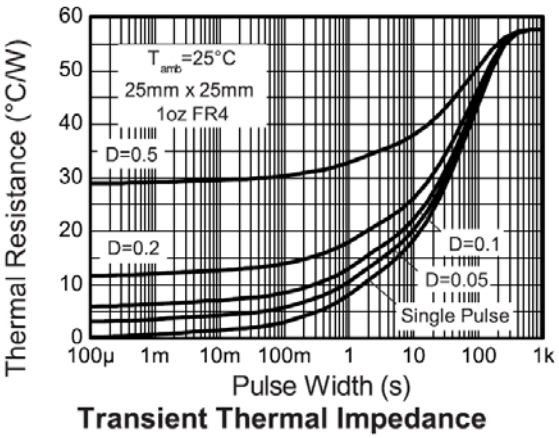

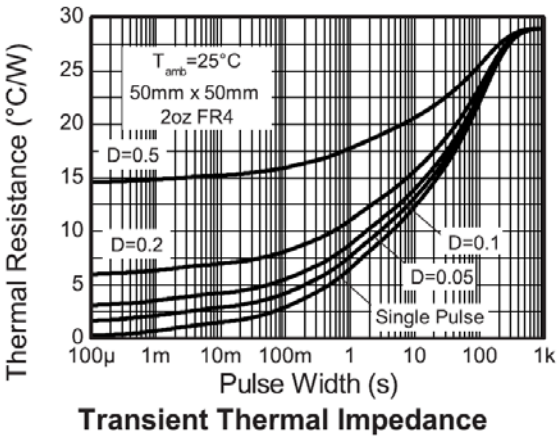

© Diodes Incorporated

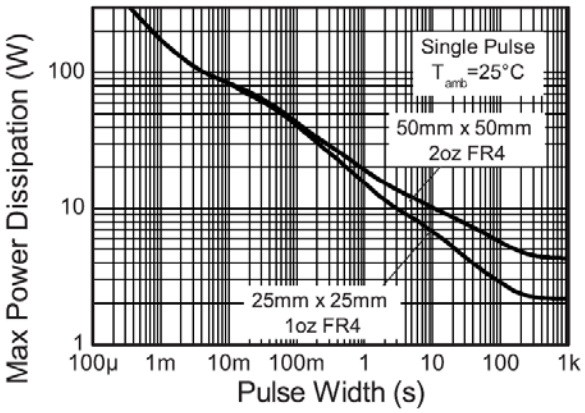

Pulse Power Dissipation

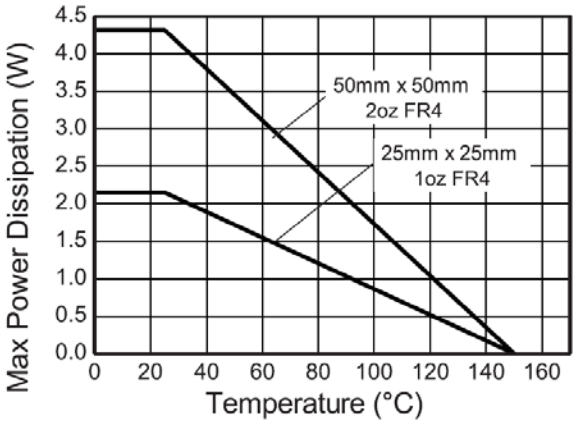

Derating Curve

Electrical Characteristics (@T_A = +25°C, unless otherwise specified.)

Characteristic	Symbol	Min	Typ	Max	Unit	Test Condition
OFF CHARACTERISTICS						
Drain-Source Breakdown Voltage	BV_{DSS}	-100	—	—	V	V_{GS} = 0V, I_D = -250µA
Zero Gate Voltage Drain Current	I_{DSS}	—	—	-1	µA	V_{DS} = -100V, V_{GS} = 0V
Gate-Source Leakage	I_{GSS}	—	—	±100	nA	V_{GS} = ±20V, V_{DS} = 0V
ON CHARACTERISTICS						
Gate Threshold Voltage	$V_{GS(th)}$	-2	—	-4	V	V_{DS} = V_{GS}, I_D = -250µA
Static Drain-Source On-Resistance (Note 9)	$R_{DS\ (ON)}$	—	—	150 190	mΩ	V_{GS} = -10V, I_D = -2.8A V_{GS} = -6V, I_D = -2.4A
Forward Transconductance (Notes 9 & 11)	g_{fs}	—	6	—	S	V_{DS} = -15V, I_D = -2.8A
DYNAMIC CHARACTERISTICS (Note 11)						
Input Capacitance	C_{iss}	—	1055	—	pF	V_{DS} = -50V, V_{GS} = 0V, f = 1MHz
Output Capacitance	C_{oss}	—	90	—	pF	
Reverse Transfer Capacitance	C_{rss}	—	76	—	pF	
SWITCHING CHARACTERISTICS (Notes 10 & 11)						
Turn-On Delay Time	$t_{d(on)}$	—	4.9	—	ns	V_{DS} = -50V, V_{GS} = -10V, I_D = -1A, R_G = 6Ω
Rise Time	t_r	—	6.8	—		
Turn-On Delay Time	$t_{d(off)}$	—	33.9	—		
Rise Time	t_f	—	17.9	—		
Total Gate Charge	Q_g	—	26.9	—	nC	V_{DS} = -50V, V_{GS} = -10V, I_D = -2.8A
Gate-Source Charge	Q_{gs}	—	3.9	—		
Gate-Drain Charge	Q_{gd}	—	10.2	—		
SOURCE-DRAIN DIODE CHARACTERISTICS						
Diode Forward Voltage (Note 9)	V_{SD}	—	-0.85	-0.95	V	T_J = +25°C , V_{GS} = 0V, I_S = -3.5A
Reverse Recovery Time (Note 11)	t_{rr}	—	49	—	ns	T_J = +25°C, I_S = -2.8A, di/dt=100A/µs,
Reverse Recovery Charge (Note 11)	Q_{rr}	—	107	—	nC	

Notes: 9. Measured under pulsed conditions. Pulse width ≤ 300µs; duty cycle ≤ 2%.
10. Switching characteristics are independent of operating junction temperature.
11. For design aid only, not subject to production testing.

© Diodes Incorporated

Typical characteristics

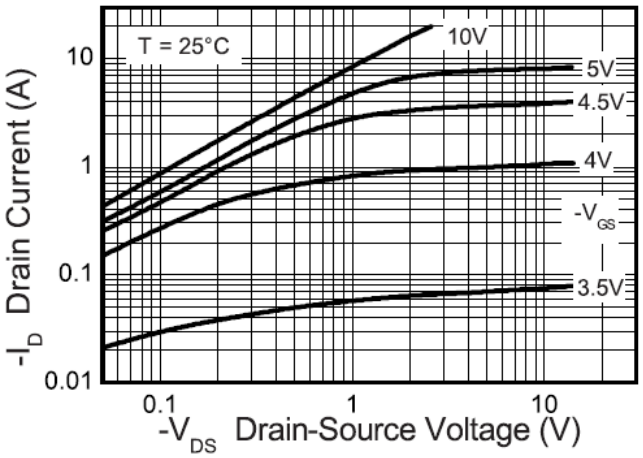

Output Characteristics

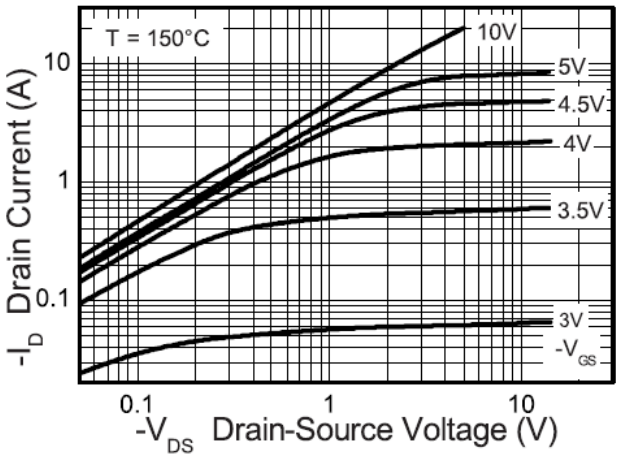

Output Characteristics

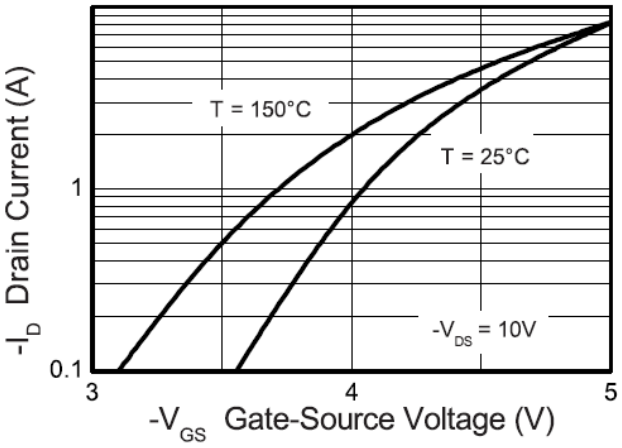

Typical Transfer Characteristics

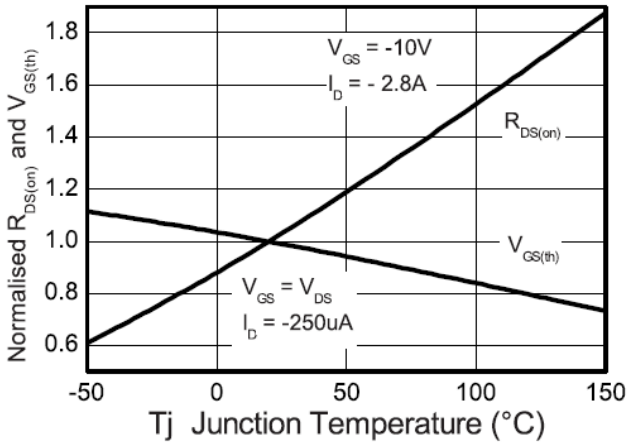

Normalised Curves v Temperature

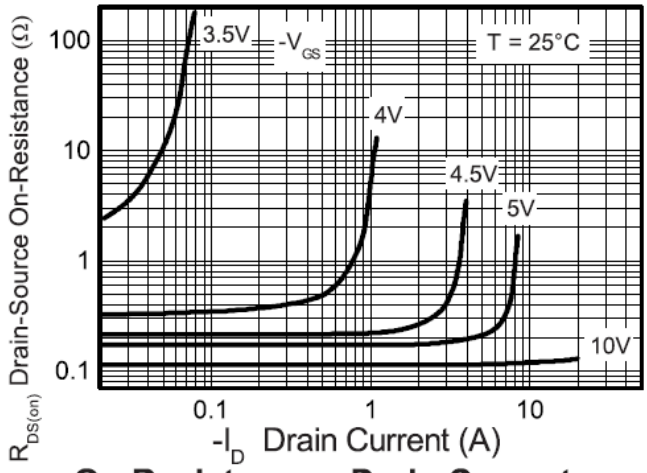

On-Resistance v Drain Current

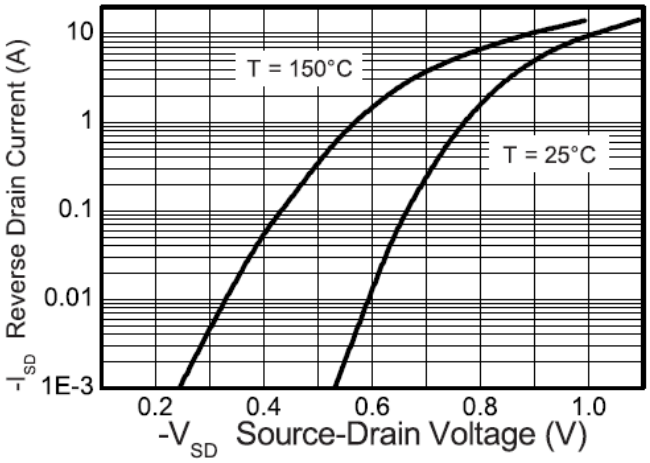

Source-Drain Diode Forward Voltage

© Diodes Incorporated

Typical characteristics

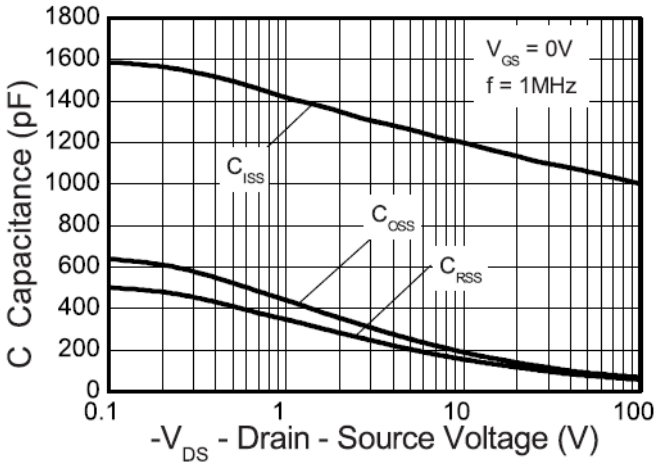

Capacitance v Drain-Source Voltage

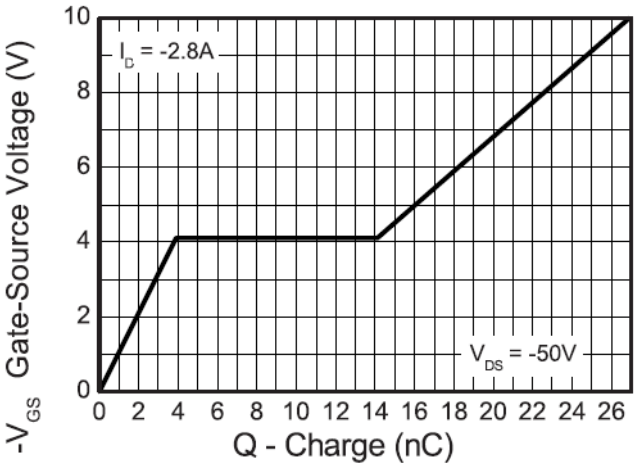

Gate-Source Voltage v Gate Charge

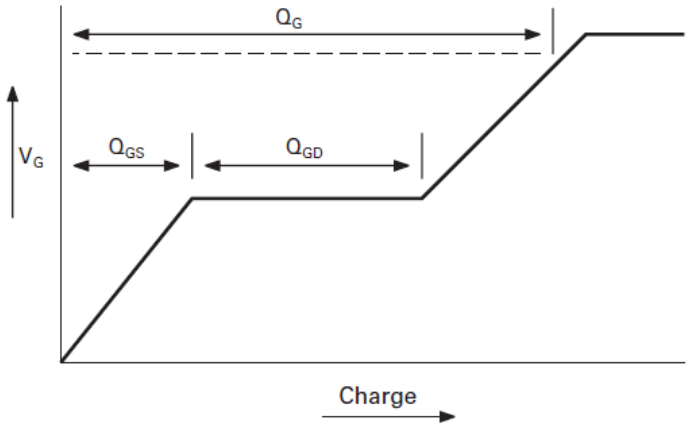

Basic gate charge waveform

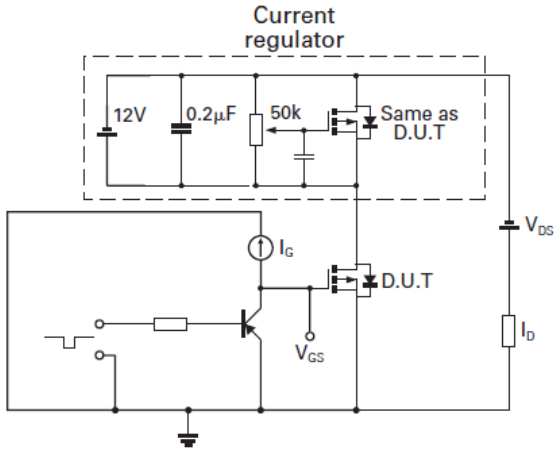

Gate charge test circuit

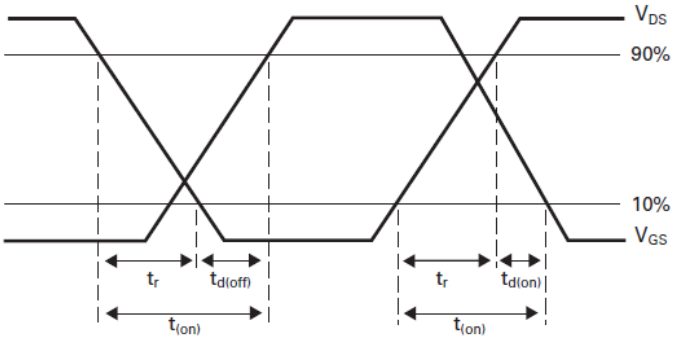

Switching time waveforms

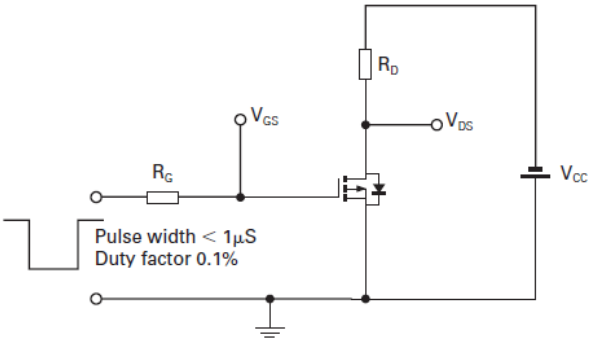

Switching time test circuit

© Diodes Incorporated

Package Outline Dimensions

Please see AP02002 at http://www.diodes.com/datasheets/ap02002.pdf for latest version.

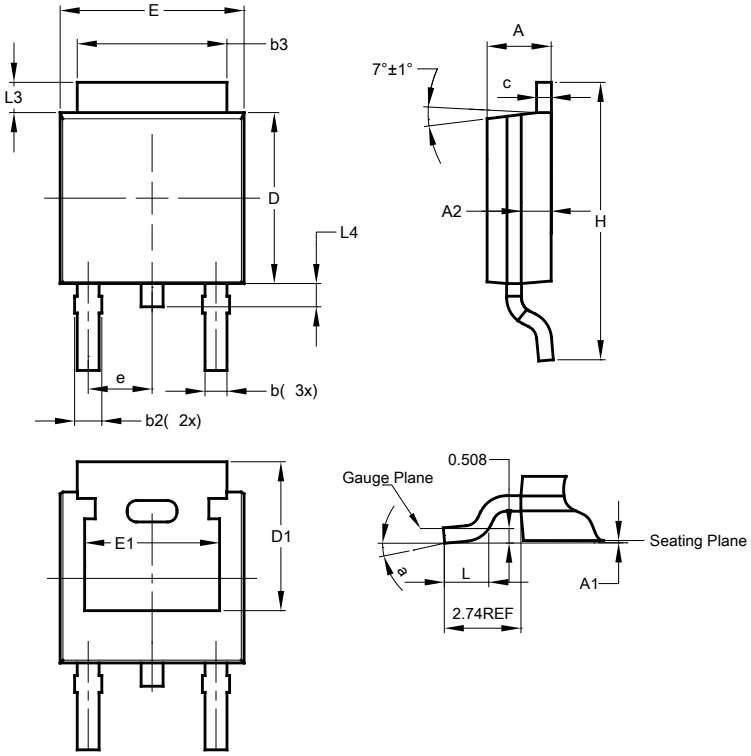

TO252 (DPAK)			
Dim	**Min**	**Max**	**Typ**
A	2.19	2.39	2.29
A1	0.00	0.13	0.08
A2	0.97	1.17	1.07
b	0.64	0.88	0.783
b2	0.76	1.14	0.95
b3	5.21	5.46	5.33
c	0.45	0.58	0.531
D	6.00	6.20	6.10
D1	5.21	-	-
e	-	-	2.286
E	6.45	6.70	6.58
E1	4.32	-	-
H	9.40	10.41	9.91
L	1.40	1.78	1.59
L3	0.88	1.27	1.08
L4	0.64	1.02	0.83
a	0°	10°	-
All Dimensions in mm			

Suggested Pad Layout

Please see AP02001 at http://www.diodes.com/datasheets/ap02001.pdf for the latest version.

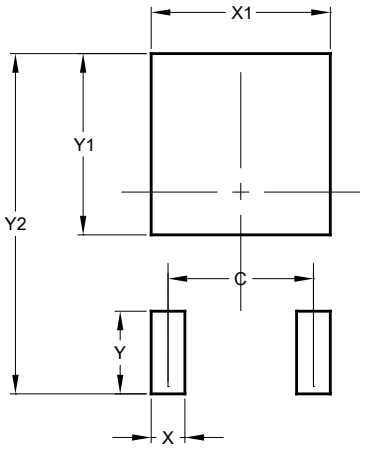

Dimensions	Value (in mm)
C	4.572
X	1.060
X1	5.632
Y	2.600
Y1	5.700
Y2	10.700

© Diodes Incorporated

IMPORTANT NOTICE

DIODES INCORPORATED MAKES NO WARRANTY OF ANY KIND, EXPRESS OR IMPLIED, WITH REGARDS TO THIS DOCUMENT, INCLUDING, BUT NOT LIMITED TO, THE IMPLIED WARRANTIES OF MERCHANTABILITY AND FITNESS FOR A PARTICULAR PURPOSE (AND THEIR EQUIVALENTS UNDER THE LAWS OF ANY JURISDICTION).

Diodes Incorporated and its subsidiaries reserve the right to make modifications, enhancements, improvements, corrections or other changes without further notice to this document and any product described herein. Diodes Incorporated does not assume any liability arising out of the application or use of this document or any product described herein; neither does Diodes Incorporated convey any license under its patent or trademark rights, nor the rights of others. Any Customer or user of this document or products described herein in such applications shall assume all risks of such use and will agree to hold Diodes Incorporated and all the companies whose products are represented on Diodes Incorporated website, harmless against all damages.

Diodes Incorporated does not warrant or accept any liability whatsoever in respect of any products purchased through unauthorized sales channel. Should Customers purchase or use Diodes Incorporated products for any unintended or unauthorized application, Customers shall indemnify and hold Diodes Incorporated and its representatives harmless against all claims, damages, expenses, and attorney fees arising out of, directly or indirectly, any claim of personal injury or death associated with such unintended or unauthorized application.

Products described herein may be covered by one or more United States, international or foreign patents pending. Product names and markings noted herein may also be covered by one or more United States, international or foreign trademarks.

This document is written in English but may be translated into multiple languages for reference. Only the English version of this document is the final and determinative format released by Diodes Incorporated.

LIFE SUPPORT

Diodes Incorporated products are specifically not authorized for use as critical components in life support devices or systems without the express written approval of the Chief Executive Officer of Diodes Incorporated. As used herein:

A. Life support devices or systems are devices or systems which:

1. are intended to implant into the body, or

2. support or sustain life and whose failure to perform when properly used in accordance with instructions for use provided in the labeling can be reasonably expected to result in significant injury to the user.

B. A critical component is any component in a life support device or system whose failure to perform can be reasonably expected to cause the failure of the life support device or to affect its safety or effectiveness.

Customers represent that they have all necessary expertise in the safety and regulatory ramifications of their life support devices or systems, and acknowledge and agree that they are solely responsible for all legal, regulatory and safety-related requirements concerning their products and any use of Diodes Incorporated products in such safety-critical, life support devices or systems, notwithstanding any devices- or systems-related information or support that may be provided by Diodes Incorporated. Further, Customers must fully indemnify Diodes Incorporated and its representatives against any damages arising out of the use of Diodes Incorporated products in such safety-critical, life support devices or systems.

Copyright © 2014, Diodes Incorporated

www.diodes.com

ENTEGRECİ

Bu belge www.entegreci.com üzerinden sunulmaktadır.

Elektronik komponent tedarikinde Entegreci

Entegreci, Eskişehir merkezli, Türkiye geneline satış yapan bir elektronik komponent mağazasıdır. Entegreler (IC), mikrodenetleyiciler, transistörler, diyotlar, pasif elemanlar, konnektörler, modüller ve geliştirme kartları tek adetten seri üretim adetlerine kadar satılır. Ürün sayfalarında güncel stok durumunu, fiyatı ve datasheet bağlantısını bulabilirsiniz.

Parça koduyla arama

Üretici parça numarasını yazın; stok ve fiyatı hemen görün.

www.entegreci.com

Ürün kategorileri

Entegreden kapasitöre tüm elektronik komponent kategorileri.

Kategorilere göz atın

Üreticiler

Aradığınız üreticinin ürünlerini tek sayfada inceleyin.

Üreticileri görün

Toplu alım ve teklif

Listede olmayan ya da yüksek adetli parçalar için teklif isteyin.

Teklif isteyin

www.entegreci.com | **destek@entegreci.com** | **0850 305 90 34**

Entegreci is an online electronic components store based in Türkiye. Search by manufacturer part number to see stock, prices and datasheets for integrated circuits, microcontrollers, transistors, passive components and connectors, or request a quote for parts that are not listed.

Bu sayfa Entegreci tarafından eklenmiştir. Belgenin önceki sayfaları asıl yayıncısına aittir ve içeriği değiştirilmemiştir; en güncel sürüm için belgenin yayıncısına başvurun.