26V, ZERO-DRIFT, HIGH-PRECISION CURRENT MONITOR

Description

The ZXCT21xQ series are automotive AEC-Q qualified high-precision current-shunt monitors with different choices of gain options to measure low-voltage drop (10mV) across a small shunt resistor with minimal error. This enables high accuracy of large current measurement and reduces a power loss caused by the measurement at common-mode voltages from -0.3V to 26V.

OUT pin is a voltage proportional to the load current. It can then be processed with an ADC. There are six fixed gains available: 50, 75, 100, 200, 500, and 1000V/V respectively. This device is designed with zero-drift architecture and is manufactured by post trim technology to achieve low offset voltage, low gain drift and low gain error among full temperature range for precise measurement.

The ZXCT21xQ operates from a single 2.7V to 26V power supply with a maximum of 100μA of supply current from -40°C to +125°C, and is offered in the SOT363 package.

Features

- Automotive AEC-Q100 Grade 1
- Supply Voltage Range: 2.7V to 26V
- Temperature Range: -40°C to +125°C
- Wide Common-Mode Range: -0.3V to 26V
- Support Shunt Drops of 10mV Full-Scale
- Gain Error (Maximum Overtemperature)
  - A and B Version: ±0.8%
  - C Version: ±0.5%
- Low Offset Voltage: ±30μV (max)
- Quiescent Current: 100μA (max)
- Low Gain Error Drift: 10ppm/°C (max)
- Rail-to-Rail Output Capacity
- Choice of Gains:
  - ZXCT210Q: 200V/V
  - ZXCT211Q: 500V/V
  - ZXCT212Q: 1000V/V
  - ZXCT213Q: 50V/V
  - ZXCT214Q: 100V/V
  - ZXCT215Q: 75V/V
- Package: 6-pin SOT363
- **Totally Lead-Free & Fully RoHS Compliant (Notes 1 & 2)**
- **Halogen and Antimony Free. "Green" Device (Note 3)**
- **The ZXCT21xQ are suitable for automotive applications requiring specific change control; these parts are AEC-Q100 qualified, PPAP capable, and manufactured in IATF 16949 certified facilities.**
  https://www.diodes.com/quality/product-definitions/

Pin Assignments

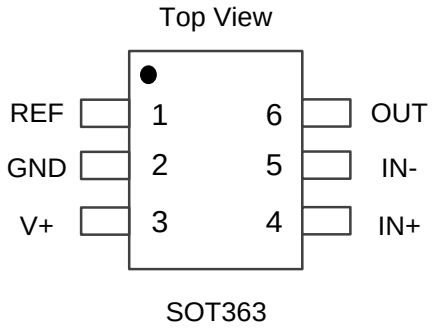

Applications

- Vehicle valve controls
- Vehicle body control systems
- Vehicle motor controls, e-pumps
- Vehicle e-compressors
- Vehicle ADAS
- EV OBC, BMS, ESP, high-voltage DC/DC
- Wireless charging
- Current sensing (high-side/low-side)
- Battery charging and discharging

Notes:
1. No purposely added lead. Fully EU Directive 2002/95/EC (RoHS), 2011/65/EU (RoHS 2) & 2015/863/EU (RoHS 3) compliant.
2. See https://www.diodes.com/quality/lead-free/ for more information about Diodes Incorporated's definitions of Halogen- and Antimony-free, "Green" and Lead-free.
3. Halogen- and Antimony-free "Green" products are defined as those which contain <900ppm bromine, <900ppm chlorine (<1500ppm total Br + Cl) and <1000ppm antimony compounds.

© 2023 Copyright Diodes Incorporated. All Rights Reserved.

Typical Applications Circuit

Part Number	Version	Gain	Gain Error	V_{OS}	Gain Drift
		V/V	%	µV	ppm/°C
ZXCT210Q	A	200	0.8	±35	10
ZXCT210Q	B	200	0.8	±30	10
ZXCT210Q	C	200	0.5	±30	10
ZXCT211Q	A	500	0.8	±35	10
ZXCT211Q	B	500	0.8	±30	10
ZXCT211Q	C	500	0.5	±30	10
ZXCT212Q	A	1000	0.8	±35	10
ZXCT212Q	B	1000	0.8	±30	10
ZXCT212Q	C	1000	0.5	±30	10
ZXCT213Q	A	50	0.8	±100	10
ZXCT213Q	B	50	0.8	±90	10
ZXCT213Q	C	50	0.5	±90	10
ZXCT214Q	A	100	0.8	±75	10
ZXCT214Q	B	100	0.8	±60	10
ZXCT214Q	C	100	0.5	±60	10
ZXCT215Q	A	75	0.8	±75	10
ZXCT215Q	B	75	0.8	±60	10
ZXCT215Q	C	75	0.5	±60	10

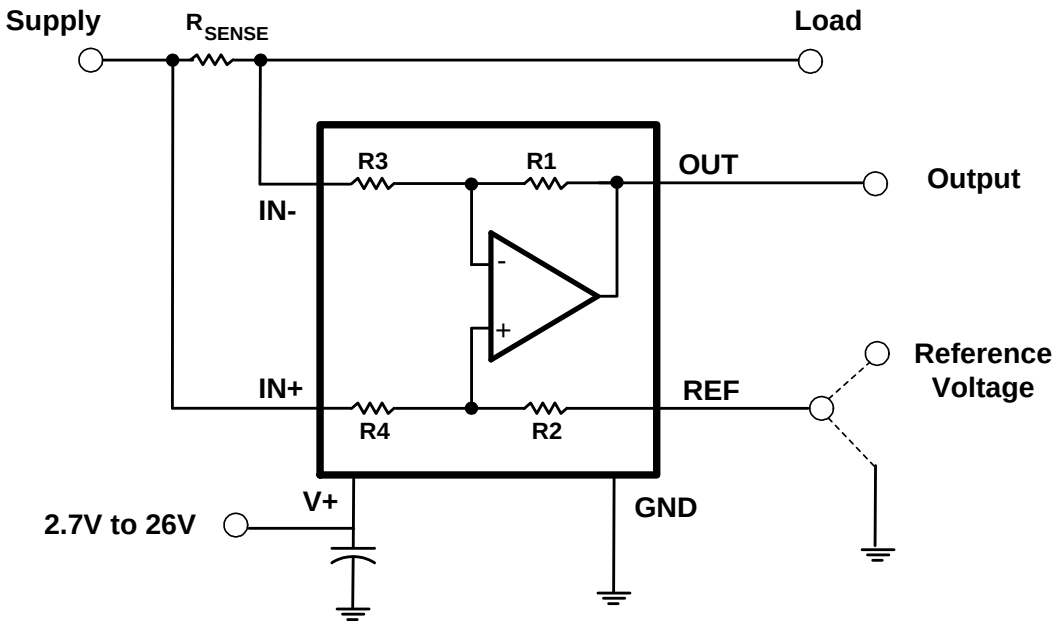

$V_{OUT} = (I_{LOAD} \times R_{SENSE})$ GAIN + V_{REF}

© 2023 Copyright Diodes Incorporated. All Rights Reserved.

Pin Descriptions

Pin Name	Pin Number	I/O	Description
REF	1	Analog input	Reference voltage, 0 to V+
GND	2	—	Ground
V+	3	Power	Power supply, 2.7V to 26V
IN+	4	Analog input	Connect to supply side of shunt resistor.
IN–	5	Analog input	Connect to load side of shunt resistor.
OUT	6	Analog output	Output voltage

Absolute Maximum Ratings (@T_A = +25°C, unless otherwise specified.) (Notes 4, 5)

Description		Rating	Unit
Supply Volatge (V+)		26	V
Analog Inputs IN+, IN-	Differential (IN+)-(IN-)	-26 to 26	V
	Common Mode	GND - 0.3 to 26	V
REF Input Voltage		GND - 0.3 to (V+) + 0.3	V
Output		GND - 0.3 to (V+) + 0.3	V
Input Current Into All Pins (Note 5)		5	mA
ESD Human Body Model ESD Protection (HBM)		±5	kV
ESD Charged Device Model ESD Protection (CDM)		±1.5	kV
Operating Ambient Temperature, T_A		-40 to +125	°C
Operating Junction Temperature, T_J		-40 to +150	°C
Storage Temperature, T_{STG}		-65 to +150	°C

Notes: 4. Stresses greater than the *Absolute Maximum Ratings* specified above can cause permanent damage to the device. These are stress ratings only; functional operation of the device at these or any other conditions exceeding those indicated in this specification is not implied. Device reliability can be affected by exposure to absolute maximum rating conditions for extended periods of time.

5. Input voltage at any pin can exceed the voltage shown if the current at that pin is limited to 5mA.

Thermal Information (Note 6)

Symbol	Parameter	Value	Unit
$R_{\theta JA}$	Junction-to-Ambient Thermal Resistance	228	°C/W
$R_{\theta JC}$	Junction-to-Case Thermal Resistance	64	

Note: 6. $R_{\theta JA}$ and $R_{\theta JC}$ are measured at T_A = +25°C on a high effective thermal conductivity four-layer test board per JEDEC 51-7.

Recommended Operating Conditions (Note 7)

Symbol	Parameter	Min	Typ	Max	Unit
V_{CM}	Common-Mode Input Voltage	-0.3	12	26	V
V_S	Operating Supply Voltage (Applied to V+)	2.7	5	26	V
T_A	Operating Ambient Temperature	-40	—	+125	°C

Note: 7. Refer to the typical application circuit.

© 2023 Copyright Diodes Incorporated. All Rights Reserved.

Electrical Characteristics (T_A = +25°C, V_S = 5V, V_{IN+} = 12V, V_{SENSE} = V_{IN+} – V_{IN-}, and V_{REF} = V_S/2, unless otherwise specified.)

Symbol	Parameter		Test Conditions	Min	Typ	Max	Unit
V_{CM}	Common-Mode Input		T_A = -40°C to +125°C	-0.3	—	26	V
CMRR	Common-Mode Rejection	ZXCT210Q, ZXCT211Q ZXCT212Q, ZXCT214Q ZXCT215Q	V_{IN+} = 0 to 26V, V_{SENSE} = 0, T_A = -40°C to +125°C	100	120	—	dB
		ZXCT213Q	V_{IN+} = 0 to 26V, V_{SENSE} = 0, T_A = -40°C to +125°C	95	120		
V_{OS}	Offset Voltage, RTI (Note 8)	ZXCT210Q, ZXCT211Q ZXCT212Q	V_{SENSE} = 0	—	±0.55	±35	µV
		ZXCT213Q	V_{SENSE} = 0	—	±5	±100	µV
		ZXCT214Q, ZXCT215Q	V_{SENSE} = 0	—	±1	±75	µV
dV_{OS}/dT	V_{OS} vs. Temperature		T_A = -40°C to +125°C	—	0.1	0.5	µV/°C
PSRR	Power Supply Rejection (Note 9)		V_S = 2.7V to 18V, V_{IN+} = 18V, V_{SENSE} = 0	—	±0.1	±10	µV/V
I_B	Input Bias Current		V_{SENSE} = 0	—	28	35	µA
I_{OS}	Input Offset Current		V_{SENSE} = 0	—	±0.02	—	µA
G	Gain	ZXCT210Q	—	—	200	—	V/V
		ZXCT211Q	—	—	500	—	
		ZXCT212Q	—	—	1000	—	
		ZXCT213Q	—	—	50	—	
		ZXCT214Q	—	—	100	—	
		ZXCT215Q	—	—	75	—	
E_G	Gain Error		A and B Version, V_{SENSE} = -5mV to 5mV, T_A = -40°C to +125°C	—	±0.03%	±0.8%	—
			C Version, V_{SENSE} = -5mV to 5mV, T_A = -40°C to +125°C	—	±0.03%	±0.5%	—
—	Gain Drift vs. Temperature		T_A = -40°C to +125°C	—	3	10	ppm/°C
—	Nonlinearity Error		V_{SENSE} = -5mV to 5mV	—	±0.01%	—	—
V_{OH}	Swing to V+ Power-Supply Rail		R_L = 10kΩ to GND, T_A = -40°C to +125°C	—	(V+) – 0.05	(V+) – 0.2	V
V_{OL}	Swing to GND		R_L = 10kΩ to GND, T_A = -40°C to +125°C	—	(V_{GND}) + 0.005	(V_{GND}) + 0.05	V
—	Maximum Capacitive Load		No Sustained Oscillation	—	1	—	nF
GBW	Bandwidth		C_{LOAD} = 10pF, ZXCT210Q	—	14	—	kHz
			C_{LOAD} = 10pF, ZXCT211Q	—	7	—	
			C_{LOAD} = 10pF, ZXCT212Q	—	4	—	
			C_{LOAD} = 10pF, ZXCT213Q	—	80	—	
			C_{LOAD} = 10pF, ZXCT214Q	—	30	—	
			C_{LOAD} = 10pF, ZXCT215Q	—	40	—	
SR	Slew Rate		—	—	0.4	—	V/µs
—	Voltage Noise Density		—	—	25	—	nV/√Hz
V_S	Operating Voltage Range		T_A = -40°C to +125°C	2.7	—	26	V
I_Q	Quiescent Current		V_{SENSE} = 0	—	65	100	µA
	I_Q Overtemperature		T_A = -40°C to +125°C	—	—	115	µA

Notes: 8. RTI stands for referred to input. For ZXCT210Q and ZXCT213Q, the long-term stability of V_{OS} are 100µV and 150µV respectively which are defined as maximum V_{OS} drift during high temperature life test 1000 hours with T_A = +125°C. The V_{OS} drift is not a linear function of time, and is greater initially and diminishes over time. This parameter is not in production test, but guaranteed by design.

9. The parameter values are guaranteed by characterization, but not production tested.

© 2023 Copyright Diodes Incorporated. All Rights Reserved.

Typical Performance Characteristics

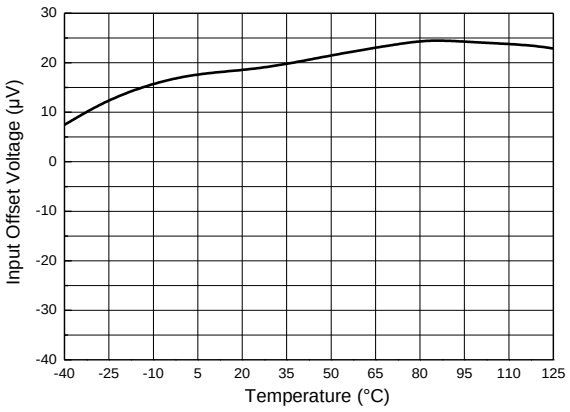

Figure 1. Offset Voltage vs. Temperature

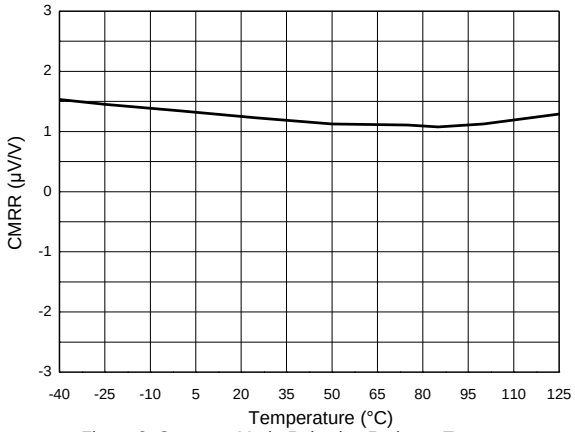

Figure 2. Common-Mode Rejection Ratio vs. Temperature

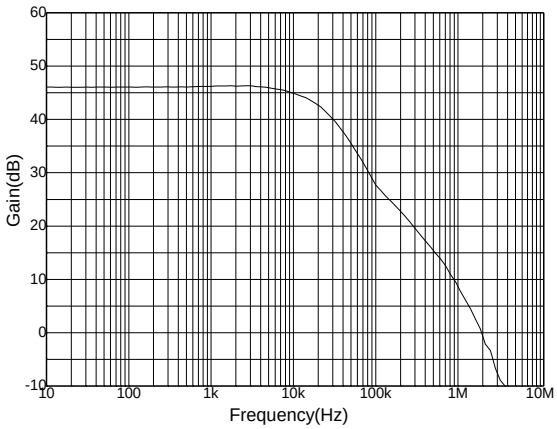

Figure 3. Gain vs. Frequency

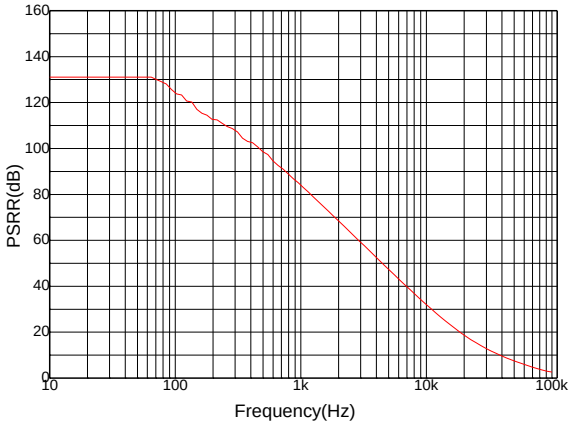

Figure 4. Power-Supply Rejection Ratio vs. Frequency

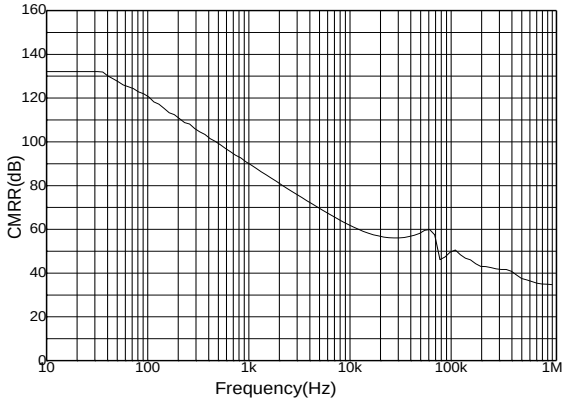

Figure 5. Common-Mode Rejection Ratio vs. Frequency

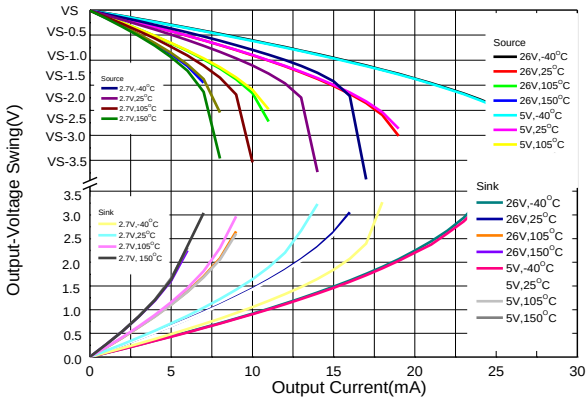

Figure 6. Output-Voltage Swing vs. Output Current

© 2023 Copyright Diodes Incorporated. All Rights Reserved.

Typical Performance Characteristics (continued)

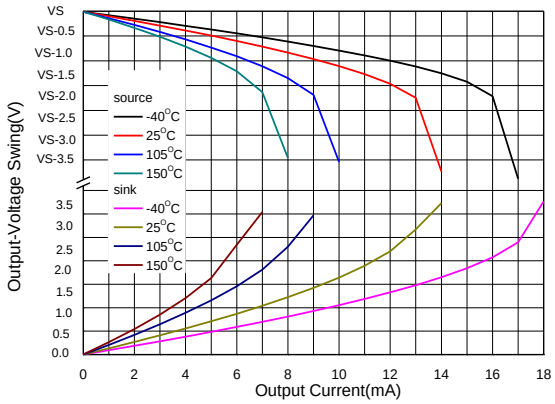

Figure 7. Output-Voltage Swing vs. Output Current

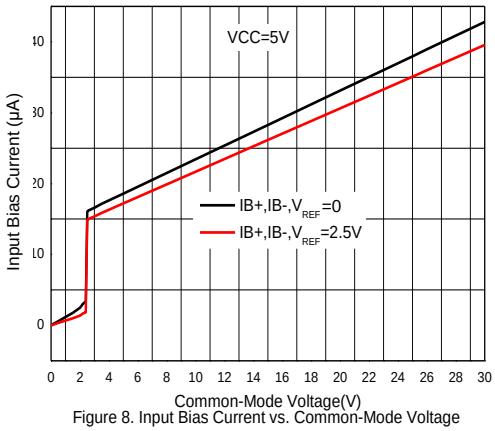

Figure 8. Input Bias Current vs. Common-Mode Voltage

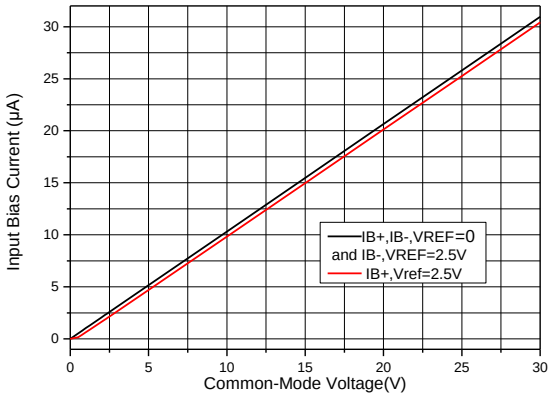

Figure 9. Input Bias Current vs. Common-Mode Voltage With Supply Voltage=0 (Shutdown)

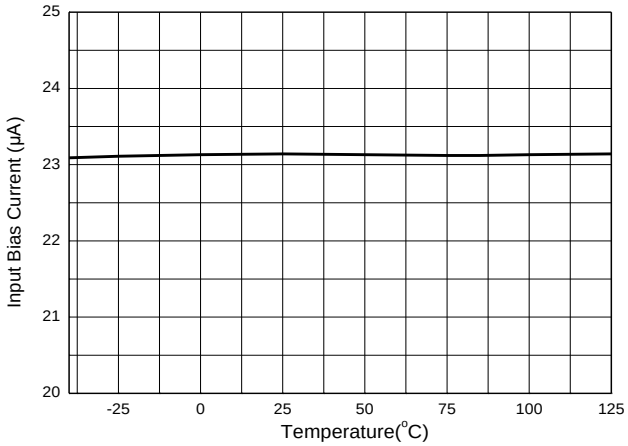

Figure 10. Input Bias Current vs. Temperature

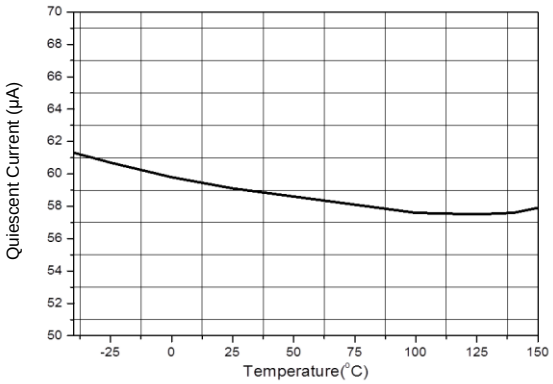

Figure 11. Quiescent Current vs. Temperature

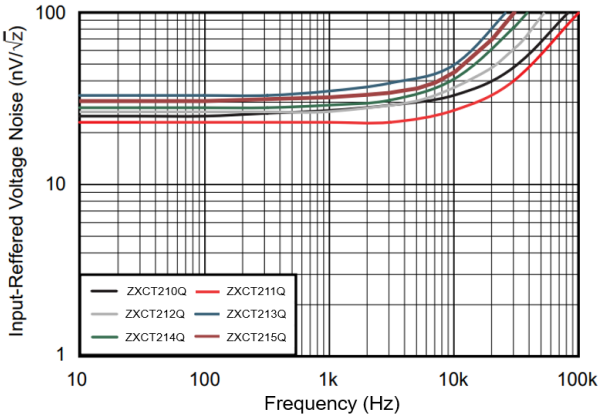

Figure 12. Input-Referred Voltage Noise vs. Frequency

© 2023 Copyright Diodes Incorporated. All Rights Reserved.

Typical Performance Characteristics (continued)

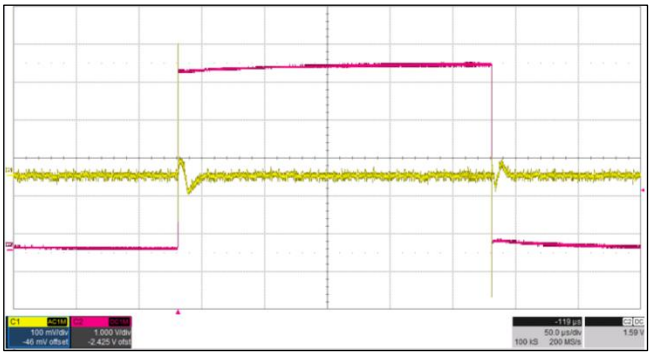

Figure 13. Common-Mode Voltage vs. Transient Response

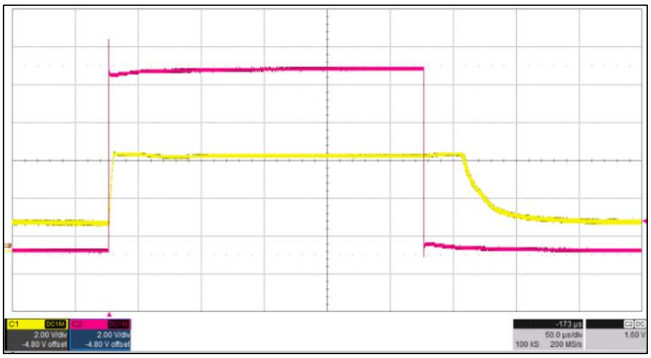

Figure 14. Noninverting Differential Input Overload

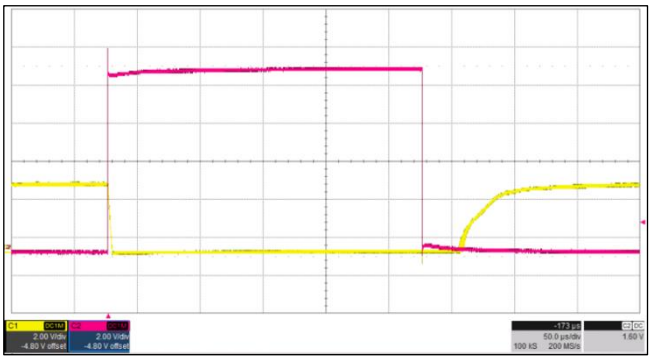

Figure 15. Inverting Differential Input Overload

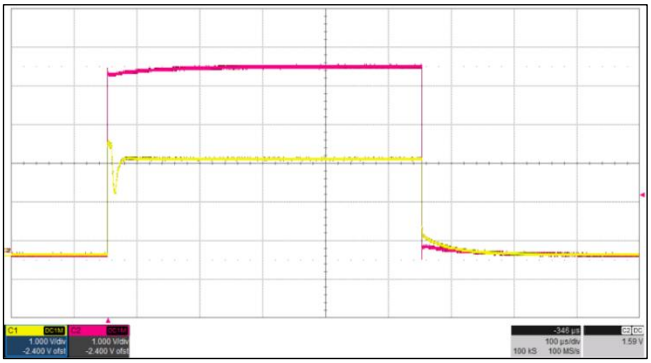

Figure 16. Startup Response

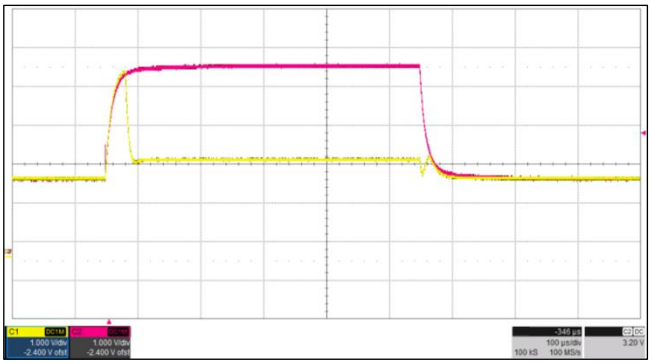

Figure 17. Brownout Recovery

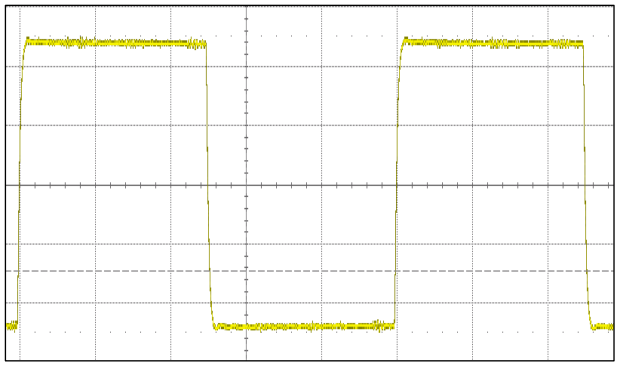

Figure 18. Output Stability with Load 2.2nF

© 2023 Copyright Diodes Incorporated. All Rights Reserved.

Application Information

The ZXCT21xQ series are 26V, common-mode, zero-drift, current-sensing amplifiers that can be used in both low-side and high-side configurations. These specially-designed, current-sensing amplifiers are able to accurately measure voltages developed across current-sensing resistors on common-mode voltages that far exceed the supply voltage powering the device. Current can be measured on input voltage rails as high as 26V while the device can be powered from supply voltages as low as 2.7V.

The ZXCT21xQ current-sense amplifiers can be configured for both low-side and high-side current sensing. Low-side sensing appears to have the advantage of being straightforward, inexpensive, and can be implemented with a simple op amp circuit. The zero-drift topology enables high-precision measurements with the low temperature drift 0.5µV/°C among full operating temperature range from -40°C to +125°C.

Unidirectional Current-Sensing Circuit:

Figure 19 shows the basic connections for the ZXCT21xQ series to sense the unidirectional load current. The input pins, IN+ and IN–, must be connected as close as possible to the shunt resistor to minimize any resistance in series with the shunt resistor. Power-supply bypass capacitors are required for stability. It is also recommended to add decoupling capacitors to reject power-supply noise. Those capacitors would contribute in the best performance while PCB layout in consideration shall be placed as close as possible to the device pins.

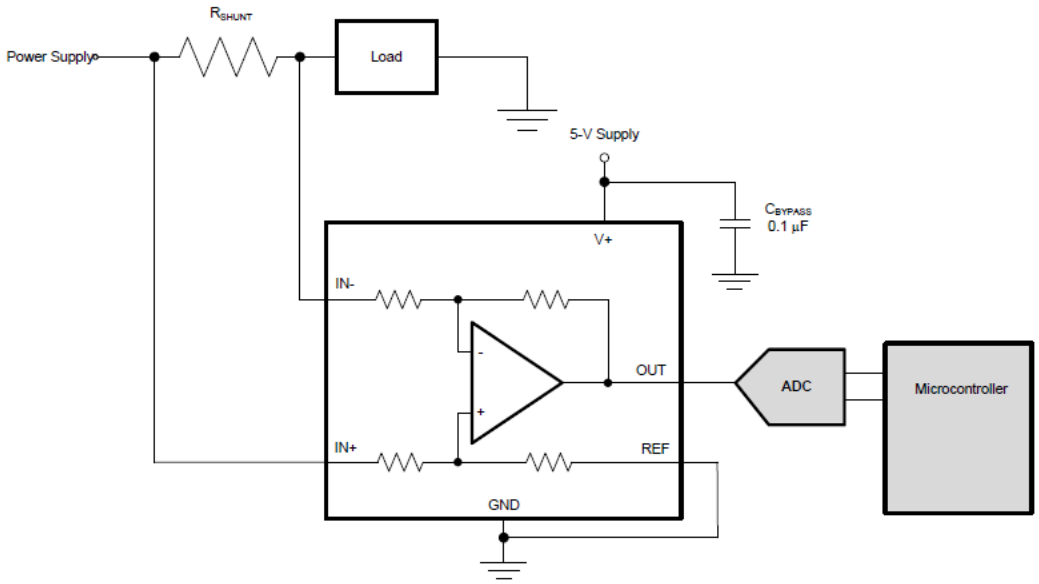

Figure 19. Unidirectional Current Sensing Processed with an ADC

How to Select R_{SHUNT}:

The zero-drift topology of the ZXCT21xQ offers a major advantage of the low offset characteristic enables lower full-scale drops across the shunt resistor. This results in high accuracy at a full-scale range on the order of 10mV to reduce power dissipation at the shunt resistor. While measuring load current over a wide dynamic range, the lower gains of the three devices, ZXCT213Q, ZXCT214Q, or ZXCT215Q, are recommended to monitor a larger shunt voltage drop. For example, choose ZXCT213Q (gain = 50) @ V+ = 3.3V, this can easily handle a full-scale shunt drop of 60mV to convert OUT = 3.0V. And then MCU can read out ADC for a real-time current monitoring.

Bidirectional Current-Sensing Circuit:

Figure 20 shows an alternative connection in applications for the bidirectional current sensing. What is different from Figure 19 is the configuration of REF pin. In bidirectional current sensing, the current measurements are taken when current is flowing in both directions. For example, BMS (battery management system), the current is measured when the battery is being charged or discharged.

Bidirectional operation requires the output to swing both positive and negative around a bias voltage applied to the REF pin. The voltage applied to the REF pin depends on the application. However, most often it is biased to either half of the supply voltage or to half the value of the measurement system reference. Take care the REF pin must always be connected to a low-impedance circuit and to avoid any voltage that exceeds its absolute maximum rating.

© 2023 Copyright Diodes Incorporated. All Rights Reserved.

Application Information (continued)

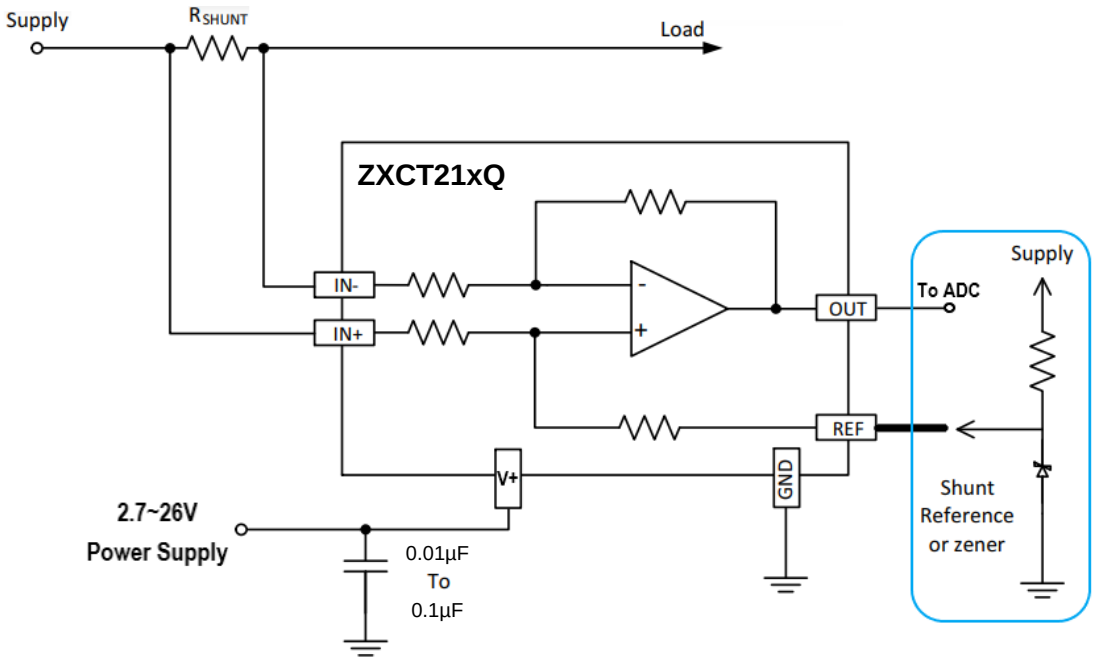

Figure 20. Bidirectional Current Sensing with an External Voltage Reference Circuit

Input Filtering

Input filtering may be needed to limit the bandwidth of signals or to add protection against transients that may be generated as the result of shunt inductance. Input filter resistors associates resistance mismatch between them can adversely affect gain, CMRR, and VOS. The effect on VOS is partly due to input bias currents as well. As a result, the value of the input resistors should be limited to 10Ω or less. Ideally, select the capacitor to exactly match the time constant of the shunt resistor and its inductance. Figure 21 shows a filter placed at the inputs pins in some applications, where the current being measured may be inherently noisy.

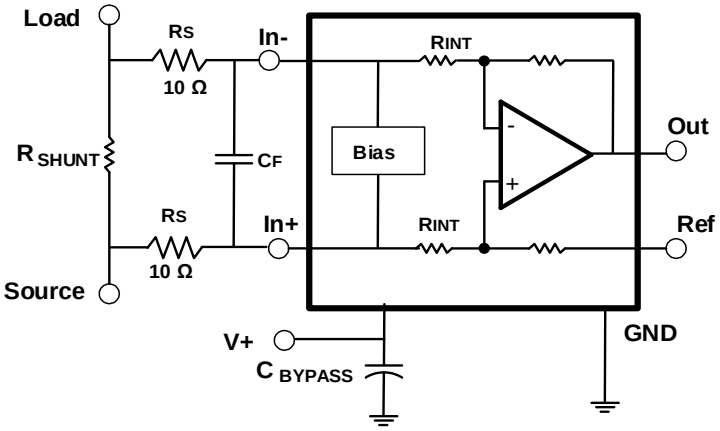

Figure 21. R_S (< 10Ω) and C_F to Compensate for Shunt Inductance on Shunts Less than 1mΩ or in Noisy Applications

© 2023 Copyright Diodes Incorporated. All Rights Reserved.

Application Information (continued)

As a consideration to mitigate the impact of shunt inductance in a high-current, high-transient environment the RC time constant of the added R_S and C_F should be greater than the time constant implied by the inductance and resistance implied by R_{SHUNT}.

$$2 \cdot R_S \cdot C_F \geq \frac{L_{SHUNT}}{R_{SHUNT}}$$

Due to additional current used in the bias circuit, the voltage between the IN- and IN+ pins will differ from voltage across the sense resistor. This will appear as a gain error at the output. These internal bias currents from the inputs are not equal in magnitude and change depending on common-mode conditions. This is the motivation of keeping the added resistor below 10Ω. The chart below has the equations for calculating the gain errors based on adding well-matched source resistors. The equations include a provision for the additional 20µA current used by the bias circuit block that is depicted as bias in Figure 19.

Part Number	Gain	R_{INT} R3 and R4	Gain Error Factor Equations	Gain Error % *
				R_S = 5Ω
ZXCT210Q	200	5kΩ	$\frac{1000}{R_S + 1000}$	0.4975%
ZXCT211Q	500	2kΩ	$\frac{10000}{13 * R_S + 10000}$	0.6458%
ZXCT212Q	1000	1kΩ	$\frac{5000}{9 * R_S + 5000}$	0.8919%
ZXCT213Q	50	20kΩ	$\frac{20000}{17 * R_S + 20000}$	0.4232%
ZXCT214Q	100	10kΩ	$\frac{10000}{9 * R_S + 10000}$	0.4479%
ZXCT215Q	75	13.3kΩ	$\frac{8000}{7 * R_S + 8000}$	0.4356%

*The percentages shown should be rounded to 2 significant figures. The excess can be used to check calculations. This is for a typical semiconductor process.

$$\text{Gain Error (\%)} = 100 \cdot (1 - \text{Gain Error Factor})$$

Where:

R_{INT} is the internal resistors R3 and R4 used to set the gain and differs per device type.

R_S is the added input resistors.

© 2023 Copyright Diodes Incorporated. All Rights Reserved.

Ordering Information

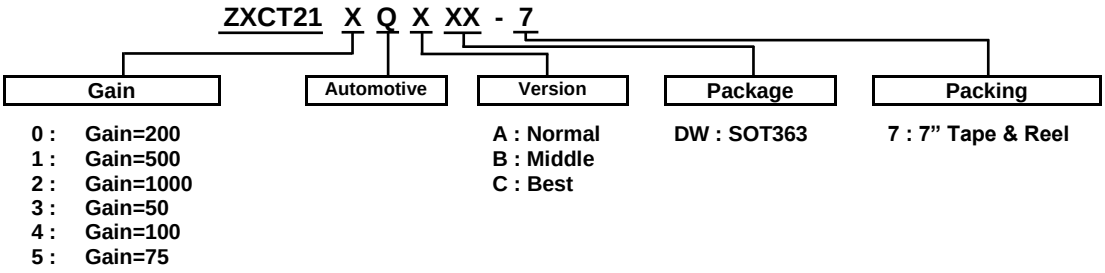

Part Number	Package Code	Package	Packing	
			Qty.	Carrier
ZXCT210QADW-7	DW	SOT363	3000	7" Tape and Reel
ZXCT210QBDW-7	DW	SOT363	3000	7" Tape and Reel
ZXCT210QCDW-7	DW	SOT363	3000	7" Tape and Reel
ZXCT211QADW-7	DW	SOT363	3000	7" Tape and Reel
ZXCT211QBDW-7	DW	SOT363	3000	7" Tape and Reel
ZXCT211QCDW-7	DW	SOT363	3000	7" Tape and Reel
ZXCT212QADW-7	DW	SOT363	3000	7" Tape and Reel
ZXCT212QBDW-7	DW	SOT363	3000	7" Tape and Reel
ZXCT212QCDW-7	DW	SOT363	3000	7" Tape and Reel
ZXCT213QADW-7	DW	SOT363	3000	7" Tape and Reel
ZXCT213QBDW-7	DW	SOT363	3000	7" Tape and Reel
ZXCT213QCDW-7	DW	SOT363	3000	7" Tape and Reel
ZXCT214QADW-7	DW	SOT363	3000	7" Tape and Reel
ZXCT214QBDW-7	DW	SOT363	3000	7" Tape and Reel
ZXCT214QCDW-7	DW	SOT363	3000	7" Tape and Reel
ZXCT215QADW-7	DW	SOT363	3000	7" Tape and Reel
ZXCT215QBDW-7	DW	SOT363	3000	7" Tape and Reel
ZXCT215QCDW-7	DW	SOT363	3000	7" Tape and Reel

© 2023 Copyright Diodes Incorporated. All Rights Reserved.

Marking Information

SOT363

(Top View)

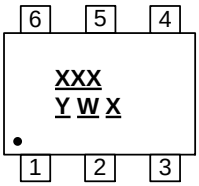

XXX : Identification Code
Y : Year 0 to 9 (ex: 3 = 2023)
W : Week : A to Z : week 1 to 26;
a to z : week 27 to 52; z represents
week 52 and 53
X : Internal Code

Part Number	Package	Identification Code
ZXCT210QADW-7	SOT363	YCQ
ZXCT210QBDW-7	SOT363	YDQ
ZXCT210QCDW-7	SOT363	YEQ
ZXCT211QADW-7	SOT363	YFQ
ZXCT211QBDW-7	SOT363	YGQ
ZXCT211QCDW-7	SOT363	YHQ
ZXCT212QADW-7	SOT363	YJQ
ZXCT212QBDW-7	SOT363	YKQ
ZXCT212QCDW-7	SOT363	YMQ
ZXCT213QADW-7	SOT363	YNQ
ZXCT213QBDW-7	SOT363	YPQ
ZXCT213QCDW-7	SOT363	YRQ
ZXCT214QADW-7	SOT363	YSQ
ZXCT214QBDW-7	SOT363	YTQ
ZXCT214QCDW-7	SOT363	YUQ
ZXCT215QADW-7	SOT363	YVQ
ZXCT215QBDW-7	SOT363	YWQ
ZXCT215QCDW-7	SOT363	YXQ

© 2023 Copyright Diodes Incorporated. All Rights Reserved.

Package Outline Dimensions

Please see http://www.diodes.com/package-outlines.html for the latest version.

SOT363

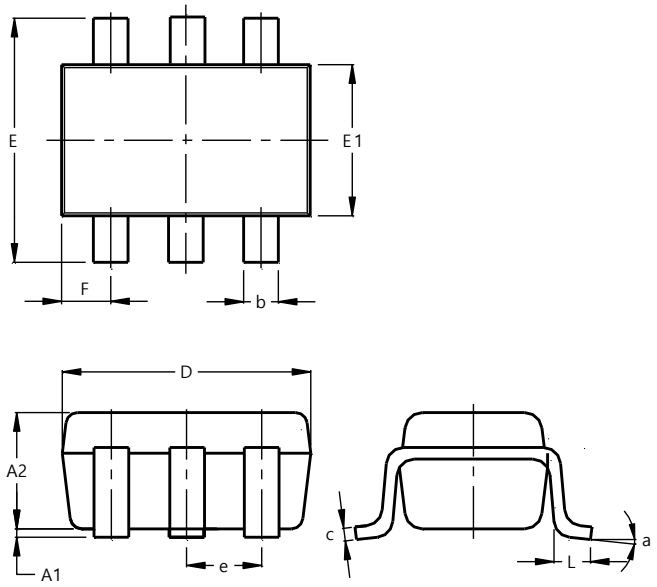

SOT363			
Dim	**Min**	**Max**	**Typ**
A1	0.00	0.10	0.05
A2	0.90	1.00	0.95
b	0.10	0.30	0.25
c	0.10	0.22	0.11
D	1.80	2.20	2.15
E	2.00	2.20	2.10
E1	1.15	1.35	1.30
e	0.650 BSC		
F	0.40	0.45	0.425
L	0.25	0.40	0.30
a	0°	8°	--
All Dimensions in mm			

Suggested Pad Layout

Please see http://www.diodes.com/package-outlines.html for the latest version.

SOT363

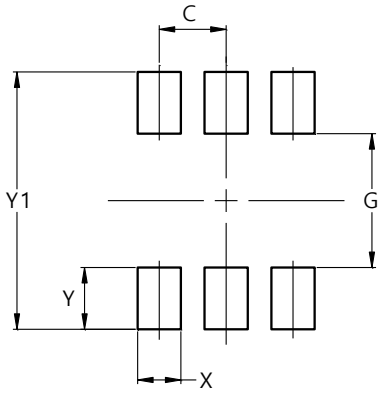

Dimensions	Value (in mm)
C	0.650
G	1.300
X	0.420
Y	0.600
Y1	2.500

Mechanical Data

- Moisture Sensitivity: Level 1 per J-STD-020
- Terminals: Finish – Matte Tin Plated Leads, Solderable per MIL-STD-202, Method 208 e3
- Weight: 0.006 grams (Approximate)
- Max Soldering Temperature +260°C for 30 secs as per JEDEC J-STD-020

© 2023 Copyright Diodes Incorporated. All Rights Reserved.

IMPORTANT NOTICE

1. DIODES INCORPORATED (Diodes) AND ITS SUBSIDIARIES MAKE NO WARRANTY OF ANY KIND, EXPRESS OR IMPLIED, WITH REGARDS TO ANY INFORMATION CONTAINED IN THIS DOCUMENT, INCLUDING, BUT NOT LIMITED TO, THE IMPLIED WARRANTIES OF MERCHANTABILITY, FITNESS FOR A PARTICULAR PURPOSE OR NON-INFRINGEMENT OF THIRD PARTY INTELLECTUAL PROPERTY RIGHTS (AND THEIR EQUIVALENTS UNDER THE LAWS OF ANY JURISDICTION).

2. The Information contained herein is for informational purpose only and is provided only to illustrate the operation of Diodes' products described herein and application examples. Diodes does not assume any liability arising out of the application or use of this document or any product described herein. This document is intended for skilled and technically trained engineering customers and users who design with Diodes' products. Diodes' products may be used to facilitate safety-related applications; however, in all instances customers and users are responsible for (a) selecting the appropriate Diodes products for their applications, (b) evaluating the suitability of Diodes' products for their intended applications, (c) ensuring their applications, which incorporate Diodes' products, comply the applicable legal and regulatory requirements as well as safety and functional-safety related standards, and (d) ensuring they design with appropriate safeguards (including testing, validation, quality control techniques, redundancy, malfunction prevention, and appropriate treatment for aging degradation) to minimize the risks associated with their applications.

3. Diodes assumes no liability for any application-related information, support, assistance or feedback that may be provided by Diodes from time to time. Any customer or user of this document or products described herein will assume all risks and liabilities associated with such use, and will hold Diodes and all companies whose products are represented herein or on Diodes' websites, harmless against all damages and liabilities.

4. Products described herein may be covered by one or more United States, international or foreign patents and pending patent applications. Product names and markings noted herein may also be covered by one or more United States, international or foreign trademarks and trademark applications. Diodes does not convey any license under any of its intellectual property rights or the rights of any third parties (including third parties whose products and services may be described in this document or on Diodes' website) under this document.

5. Diodes' products are provided subject to Diodes' Standard Terms and Conditions of Sale (https://www.diodes.com/about/company/terms-and-conditions/terms-and-conditions-of-sales/) or other applicable terms. This document does not alter or expand the applicable warranties provided by Diodes. Diodes does not warrant or accept any liability whatsoever in respect of any products purchased through unauthorized sales channel.

6. Diodes' products and technology may not be used for or incorporated into any products or systems whose manufacture, use or sale is prohibited under any applicable laws and regulations. Should customers or users use Diodes' products in contravention of any applicable laws or regulations, or for any unintended or unauthorized application, customers and users will (a) be solely responsible for any damages, losses or penalties arising in connection therewith or as a result thereof, and (b) indemnify and hold Diodes and its representatives and agents harmless against any and all claims, damages, expenses, and attorney fees arising out of, directly or indirectly, any claim relating to any noncompliance with the applicable laws and regulations, as well as any unintended or unauthorized application.

7. While efforts have been made to ensure the information contained in this document is accurate, complete and current, it may contain technical inaccuracies, omissions and typographical errors. Diodes does not warrant that information contained in this document is error-free and Diodes is under no obligation to update or otherwise correct this information. Notwithstanding the foregoing, Diodes reserves the right to make modifications, enhancements, improvements, corrections or other changes without further notice to this document and any product described herein. This document is written in English but may be translated into multiple languages for reference. Only the English version of this document is the final and determinative format released by Diodes.

8. Any unauthorized copying, modification, distribution, transmission, display or other use of this document (or any portion hereof) is prohibited. Diodes assumes no responsibility for any losses incurred by the customers or users or any third parties arising from any such unauthorized use.

9. This Notice may be periodically updated with the most recent version available at https://www.diodes.com/about/company/terms-and-conditions/important-notice

The Diodes logo is a registered trademark of Diodes Incorporated in the United States and other countries.
All other trademarks are the property of their respective owners.
© 2023 Diodes Incorporated. All Rights Reserved.

www.diodes.com

© 2023 Copyright Diodes Incorporated. All Rights Reserved.

ENTEGRECİ

Bu belge www.entegreci.com üzerinden sunulmaktadır.

Elektronik komponent tedarikinde Entegreci

Entegreci, Eskişehir merkezli, Türkiye geneline satış yapan bir elektronik komponent mağazasıdır. Entegreler (IC), mikrodenetleyiciler, transistörler, diyotlar, pasif elemanlar, konnektörler, modüller ve geliştirme kartları tek adetten seri üretim adetlerine kadar satılır. Ürün sayfalarında güncel stok durumunu, fiyatı ve datasheet bağlantısını bulabilirsiniz.

Parça koduyla arama

Üretici parça numarasını yazın; stok ve fiyatı hemen görün.

www.entegreci.com

Ürün kategorileri

Entegreden kapasitöre tüm elektronik komponent kategorileri.

Kategorilere göz atın

Üreticiler

Aradığınız üreticinin ürünlerini tek sayfada inceleyin.

Üreticileri görün

Toplu alım ve teklif

Listede olmayan ya da yüksek adetli parçalar için teklif isteyin.

Teklif isteyin

www.entegreci.com | **destek@entegreci.com** | **0850 305 90 34**

Entegreci is an online electronic components store based in Türkiye. Search by manufacturer part number to see stock, prices and datasheets for integrated circuits, microcontrollers, transistors, passive components and connectors, or request a quote for parts that are not listed.

Bu sayfa Entegreci tarafından eklenmiştir. Belgenin önceki sayfaları asıl yayıncısına aittir ve içeriği değiştirilmemiştir; en güncel sürüm için belgenin yayıncısına başvurun.