Description

The ZXCT1107Q/09Q/10Q products are high-side unipolar current sense monitors. These devices eliminate the need to disrupt the ground plane when sensing a load current.

The wide common-mode input voltage range and low quiescent current, coupled with SOT23 and SOT25 packages, make them suitable for a range of automotive applications.

The device is line powered and as such doesn't need a separate supply rail.

Quiescent current is only 3µA, thereby minimizing current sensing error. One external gain setting resistor increases versatility by permitting wide gain ranges.

The ZXCT1107Q/09Q/10Q devices have been qualified to AEC-Q100 Grade 1 and are Automotive Compliant supporting PPAPs.

Pin Assignments

ZXCT1107Q
Top View

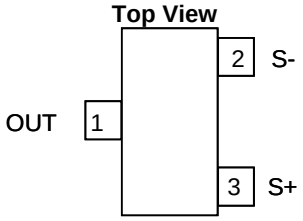

ZXCT1109Q
Top View

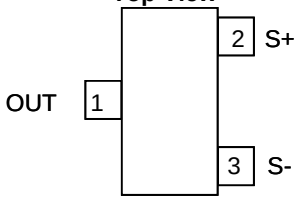

ZXCT1110Q
Top View

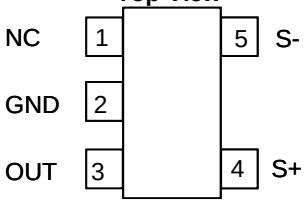

Features

- Wide Supply and Common-Mode Voltage Range:
  - 2.5V to 36V
- SOT23 and SOT25 Packages
  - 3-Pin ZXCT1107Q/09Q
  - 5-Pin ZXCT1110Q
- Low Quiescent Current (3µA)
- Extended Industrial Temperature Range -40 to +125°C
- **Totally Lead-Free & Fully RoHS Compliant (Notes 1 & 2)**
- **Halogen and Antimony Free. "Green" Device (Note 3)**
- **Qualified to AEC-Q100 Standards for High Reliability**
- **PPAP Capable (Note 4)**

Applications

- Automotive Current Measurement
- Battery Management
- Over Current Monitor

Notes:
1. No purposely added lead. Fully EU Directive 2002/95/EC (RoHS), 2011/65/EU (RoHS 2) & 2015/863/EU (RoHS 3) compliant.
2. See https://www.diodes.com/quality/lead-free/ for more information about Diodes Incorporated's definitions of Halogen- and Antimony-free, "Green" and Lead-free.
3. Halogen- and Antimony-free "Green" products are defined as those which contain <900ppm bromine, <900ppm chlorine (<1500ppm total Br + Cl) and <1000ppm antimony compounds.
4. Automotive products are AEC-Q100 qualified and are PPAP capable. Refer to https://www.diodes.com/quality/.

Typical Application Circuit

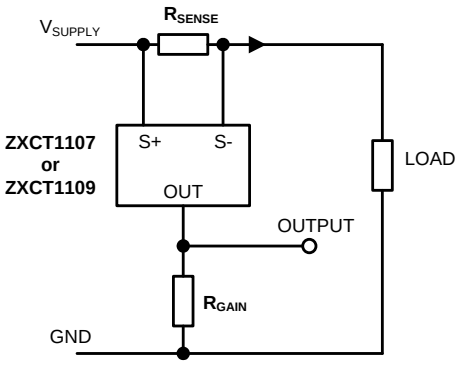

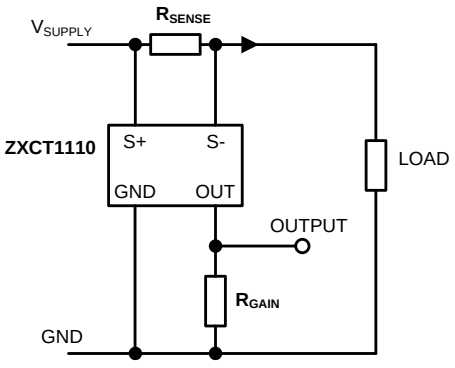

© Diodes Incorporated

Pin Descriptions

Package	SOT23		SOT25	Description
Name	ZXCT1107Q	ZXCT1109Q	ZXCT1110Q	
OUT	1	1	3	Output pin (Note 5). Current output.
S+	3	2	4	This is the positive input of the current monitor and has a wide common-mode input range. This also acts as the analog supply and provides power to internal circuitry. The current through this pin varies with differential sense voltage.
S-	2	3	5	This is the negative input of the current monitor and has a wide common-mode input range.
GND	—	—	2	Ground pin and substrate connection.
NC	—	—	1	No connection.

Note: 5. For the ZXCT1107Q and ZXCT1109Q pin 1 (OUT) acts as both the output pin and substrate connection. This means that for the ZXCT1107Q and ZCT1109Q the minimum rail voltage that can be used is 2.5V + V_{OUT} (see applications section for more details).

Absolute Maximum Ratings

Description		Rating	Unit
Voltage on S- and S+ relative to OUT (ZXCT1107Q/09Q)		-0.3 to 40	V
Voltage on S- and S+ relative to GND (ZXCT1110Q)		-0.3 to 40	V
Voltage on OUT to GND (ZXCT1110Q)		-0.3 to V_{S+}	V
Differential Sense Voltage, V_{SENSE} (Notes 6 and 7)		-0.3 to +0.8	V
Maximum Current into S+ and S- (Note 7)		±8.5	mA
Storage Temperature		-55 to +150	°C
Maximum Junction Temperature		+150	°C
Package Power Dissipation (T_A = +25°C) SOT23 SOT25		 300 (Derate to Zero at +150°C) 300 (Derate to Zero at +150°C)	mW
ESD Ratings			
ZXCT1107Q/09Q			
HBM	Human Body Model	1,500	V
MM	Machine Model	150	V
CDM	Charged Device Model	1,000	V
ZXCT1110Q			
HBM	Human Body Model	1,000	V
MM	Machine Model	150	V
CDM	Charged Device Model	1,000	V

Notes: 6. $V_{SENSE} = V_{S+} - V_{S-}$.

7. The differential input voltage limit, $V_{S+} - V_{S-}$, may be exceeded provided that the input current limit into S+ or S- is not exceeded.

Caution: Stresses greater than the 'Absolute Maximum Ratings' specified above, may cause permanent damage to the device. These are stress ratings only; functional operation of the device at conditions between maximum recommended operating conditions and absolute maximum ratings is not implied. Device reliability may be affected by exposure to absolute maximum rating conditions for extended periods of time.
Semiconductor devices are ESD sensitive and may be damaged by exposure to ESD events. Suitable ESD precautions should be taken when handling and transporting these devices.)

© Diodes Incorporated

Recommended Operating Conditions

Symbol	Parameter		Min	Max	Unit
V_{S+}	Common-Mode Input Range (Note 5)	ZXCT1110Q	2.5	36	V
		ZXCT1107Q/09Q	$V_{OUT(MAX)}$ + 2.5	36	
V_{SENSE}	Differential Sense Input Voltage Range (V_{S+} - V_{S-}) (Note 8)		0	0.5	V
V_{OUT}	Output Voltage Range (0 ≤ V_{SENSE} ≤ 100mV)	ZXCT1110Q	0	V_{S-} - 1	V
		ZXCT1107Q/09Q	0	V_{S+} - 2.5	
T_A	Ambient Temperature Range		-40	+125	°C

Notes: 5. For the ZXCT1107Q and ZXCT1109Q pin 1 (OUT) acts as both the output pin and substrate connection. This means that for the ZXCT1107Q and ZCT1109Q the minimum rail voltage that can be used is 2.5V + V_{OUT} (see applications section for more details).

8. The device operates linearly over the range 10mV ≤ V_{SENSE} ≤500mV, however at 0V < V_{SENSE} <10mV the output current due V_{SENSE} is not guaranteed to remain linear and may fall to 0.

Electrical Characteristics (@T_A = +25°C, V_{S+} = 20V, V_{SENSE} = 100mV, R_{GAIN} = 0, unless otherwise stated) (Note 6)

ZXCT1107Q, ZXCT1109Q

Symbol	Parameter	Conditions	T_A	Min	Typ	Max	Unit
I_{S-}	S- Input Current	V_{SENSE} = 0V	+25°C	—	19	100	nA
			-40°C	—	16	—	
			+125°C	—	35	—	
I_{OUT}	Output Current (Note 9)	V_{SENSE} = 0mV	+25°C	1	3	10	µA
			-40°C	—	2.2	—	
			+125°C	—	5.5	—	
		V_{SENSE} = 10mV	+25°C	37	45	54	
			-40°C	—	42	—	
			+125°C	—	49	—	
		V_{SENSE} = 30mV	+25°C	115	124	134	
			-40°C	—	119	—	
			+125°C	—	129	—	
		V_{SENSE} = 100mV	+25°C	394	408	422	
			-40°C	—	396	—	
			+125°C	—	420	—	
		V_{SENSE} = 200mV	+25°C	787	810	832	
			-40°C	—	785	—	
			+125°C	—	832	—	
		V_{SENSE} = 500mV	+25°C	1.965	2.015	2.064	mA
			-40°C	—	1.965	—	
			+125°C	—	2.065	—	
$I_{OUT\ -TC}$	Output Current Temperature Coefficient	—	Full Range	—	370	—	ppm/°C
CMSR	Common-Mode Sense Rejection	V_{S+} = 2.5V to 36V	+25°C	—	0.1	0.4	µA/V
			-40°C	—	0.13	—	
			+125°C	—	0.05	—	
BW	-3dB Small Signal Bandwidth	V_{SENSE} (AC) = 10mV_{PP} (Note 6) R_{GAIN} = 2.5kΩ	+25°C	—	0.65	—	MHz

Notes: 6. V_{SENSE} = V_{S+} - V_{S-}.

9. Output current characteristic measured with low impedance ammeter connected to GND. The device operates linearly over the range 10mV ≤ V_{SENSE} ≤500mV. At 0 < V_{SENSE} < 10mV the output current due V_{SENSE} is not guaranteed to remain linear and may fall to 0.

© Diodes Incorporated

Electrical Characteristics (Cont.) (@ T_A = +25°C, V_{S+} = 20V, V_{SENSE} = 100mV, R_{GAIN} = 0, unless otherwise stated) (Note 6)

ZXCT1110Q

Symbol	Parameter	Conditions	T_A	Min	Typ	Max	Unit
I_Q	GND Pin Current	V_{SENSE} = 0V	+25°C	—	3	5	µA
			-40°C	—	2.2	—	
			+125°C	—	5.8	—	
I_{S-}	S- Input Current		+25°C	—	19	100	nA
			-40°C	—	16	—	
			+125°C	—	35	—	
CMSR	Common-Mode Sense Rejection	V_{S+} = 2.5V to 36V	+25°C	—	0.1	0.4	µA/V
			-40°C	—	0.13	—	
			+125°C	—	0.05	—	
I_{OO}	Output Offset Current (Notes 10 and 11)	V_{SENSE} = 10mV	+25°C	—	0	±4	µA
			-40°C	—	-1.8	—	
			+125°C	—	+2.5	—	
G_T	Transconductance	V_{SENSE} = 10mV to 150mV	+25°C	3.928	4	4.072	mA/V
			-40°C	—	3.9	—	
			+125°C	—	4.08	—	
GE	Transconductance Error (Note 11)	V_{SENSE} = 10mV to 150mV	+25°C	-1.8	—	1.8	%
I_{OUT} G_{T-TC}	Transconductance Temp. Co.	—	+25°C	—	265	—	ppm/°C
V_{OUTH}	Output Relative to V_{S-}	—	+25°C	-1	-0.78	—	V
			-40°C	—	-0.88	—	
			+125°C	—	-0.63	—	
BW	-3dB Small Signal Bandwidth	V_{SENSE} (AC) = 10mV$_{PP}$, R_{GAIN} = 2.5kΩ	+25°C	—	0.65	—	MHz

Notes: 6. $V_{SENSE} = V_{S+} - V_{S-}$.

10. Output Offset Current is defined as difference between actual output current and 40µA; measured at V_{SENSE} =10mV. This will include an error due to bias currents of the device.

11. For V_{SENSE} > 10mV, the internal voltage-current converter is fully linear. This enables a true offset to be defined and used. At V_{SENSE} <10mV the output current due V_{SENSE} is not guaranteed to remain linear and may fall to 0.

© Diodes Incorporated

Typical Characteristics (Note 12)

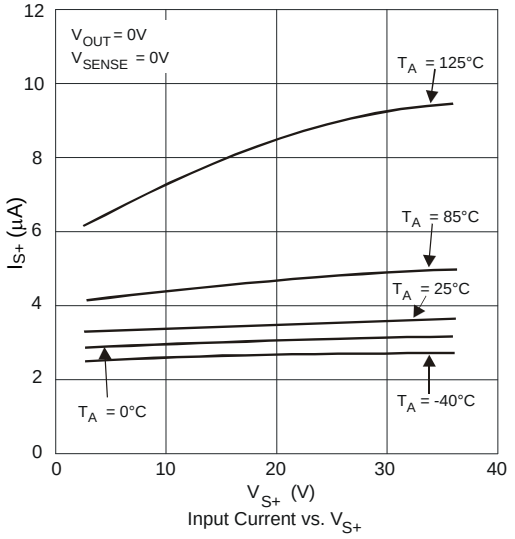

Input Current vs. V_{S+}

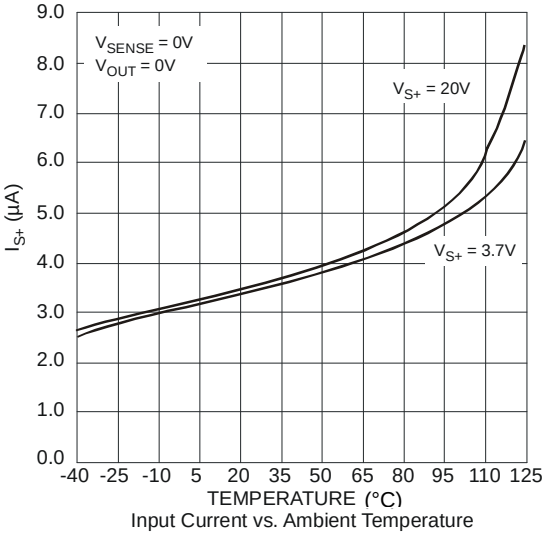

Input Current vs. Ambient Temperature

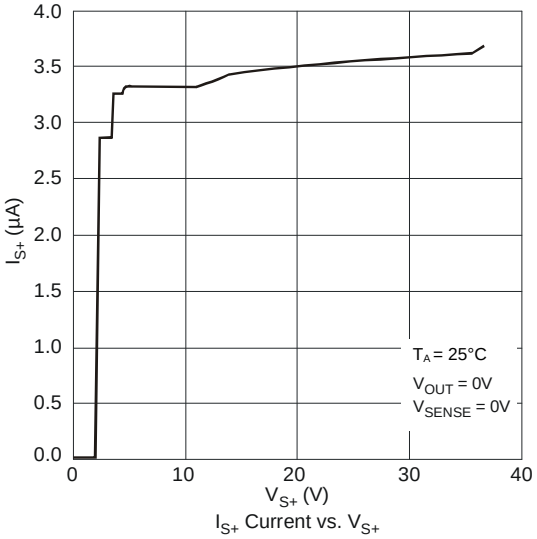

I_{S+} Current vs. V_{S+}

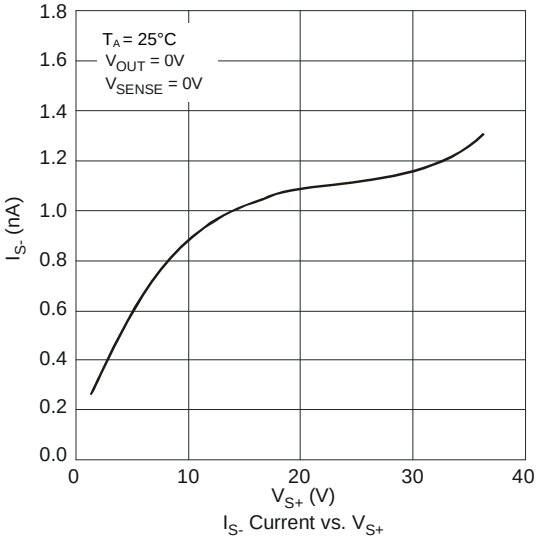

I_{S-} Current vs. V_{S+}

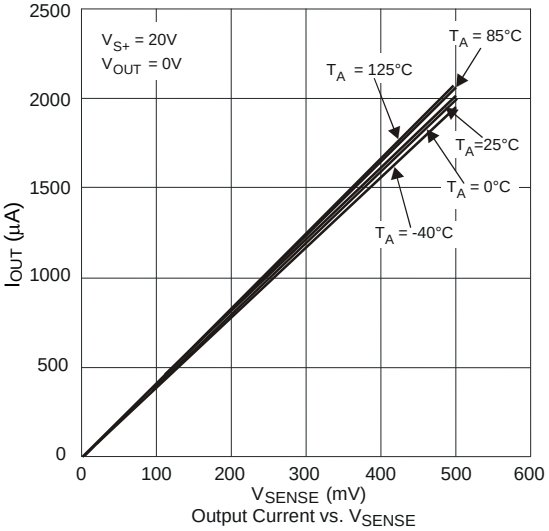

Output Current vs. V_{SENSE}

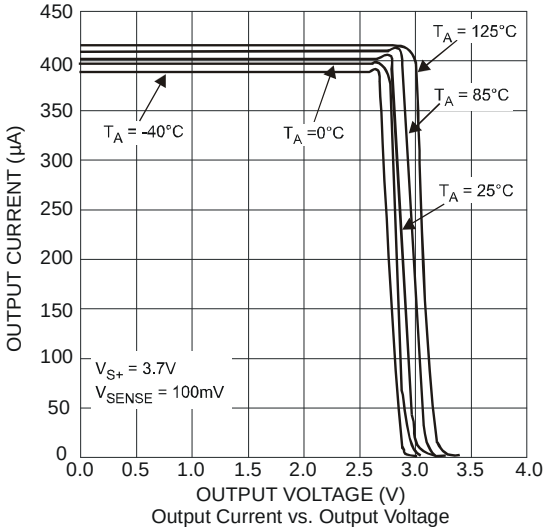

Output Current vs. Output Voltage

Note: 12. Typical characteristic only and not guaranteed performance.

© Diodes Incorporated

Typical Characteristics (Cont.) (Note 12)

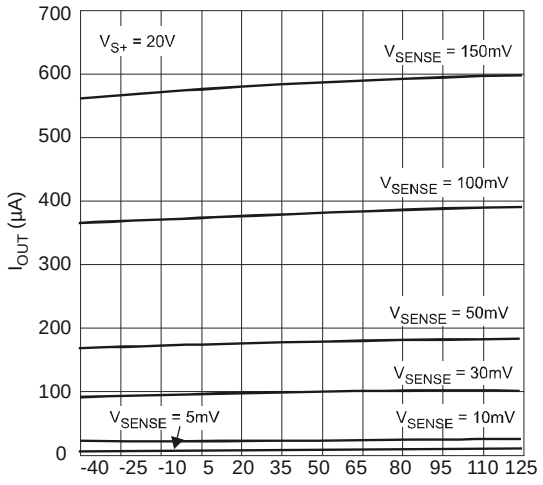

Output Current vs. Ambient Temperature

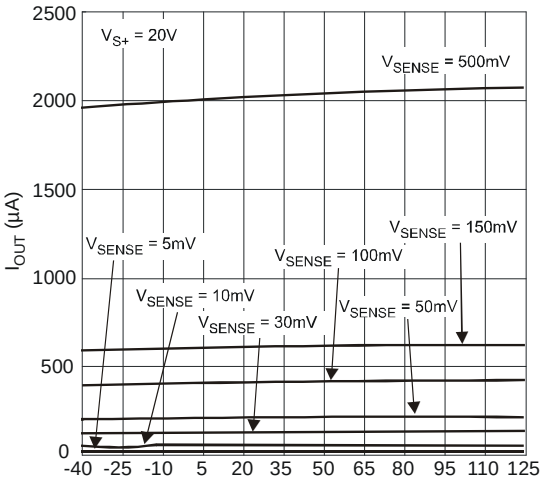

Output Current vs. Ambient Temperature

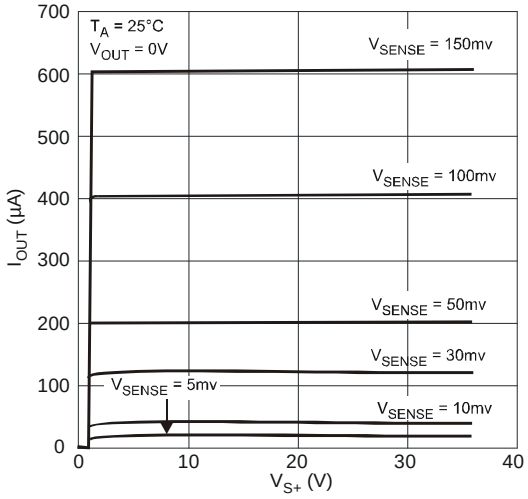

Output Current vs. V_{S+}

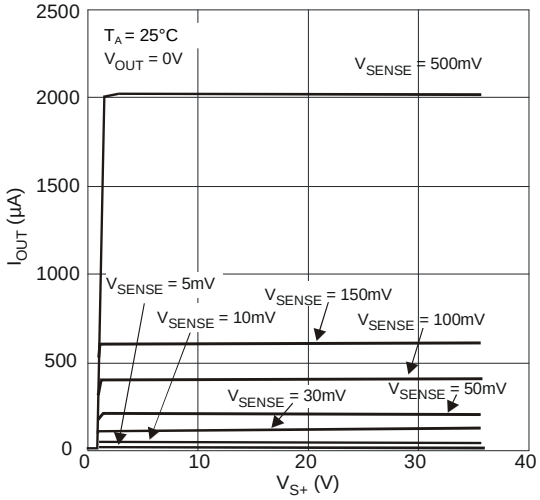

Output Current vs. V_{S+}

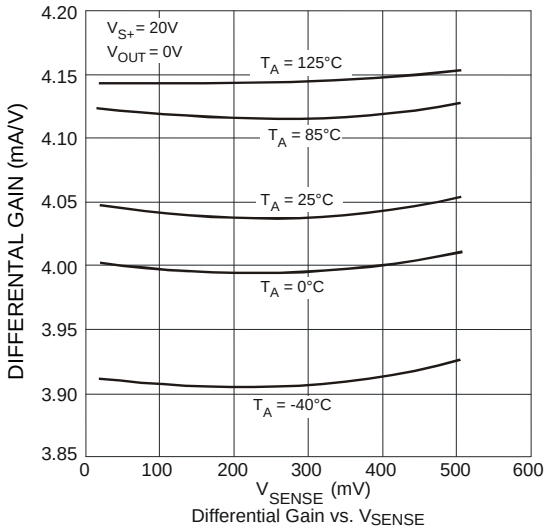

Differential Gain vs. V_{SENSE}

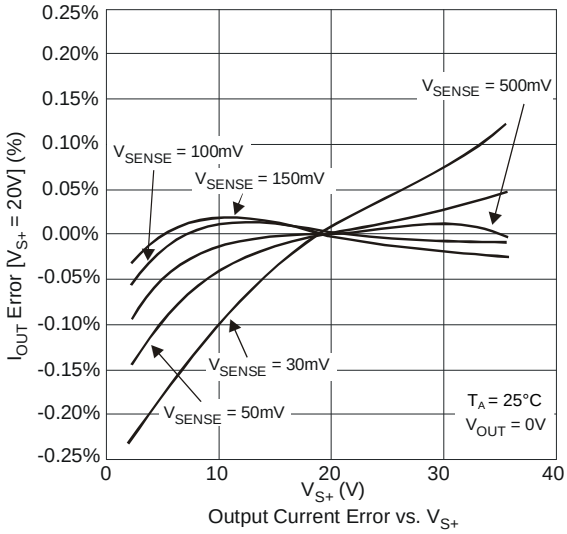

Output Current Error vs. V_{S+}

Note: 12. Typical characteristic only and not guaranteed performance.

© Diodes Incorporated

Typical Characteristics (Cont.) (Note 12)

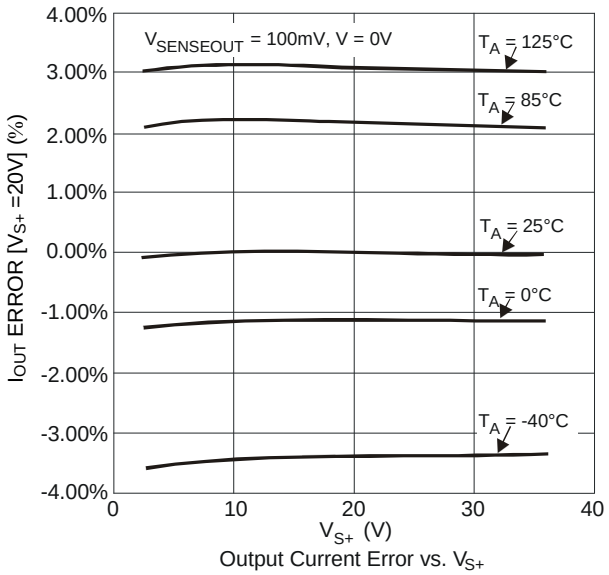

Output Current Error vs. V_{S+}

Note: 12. Typical characteristic only and not guaranteed performance.

© Diodes Incorporated

Typical AC Characteristics (Note 12)

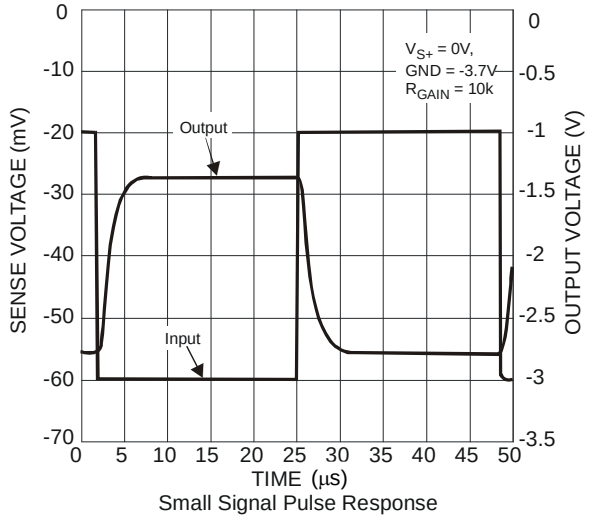

Small Signal Pulse Response

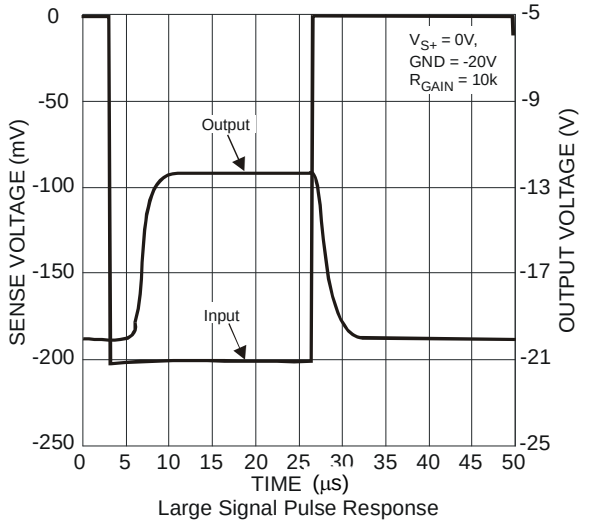

Large Signal Pulse Response

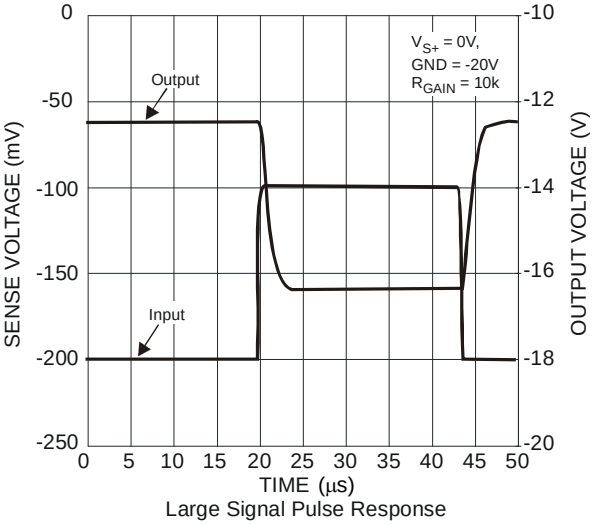

Large Signal Pulse Response

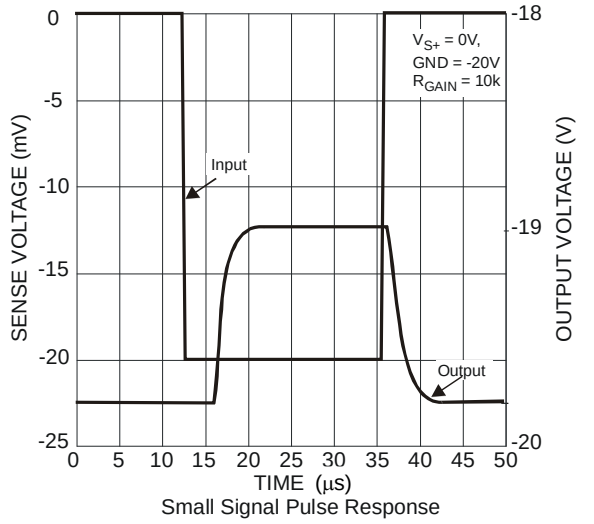

Small Signal Pulse Response

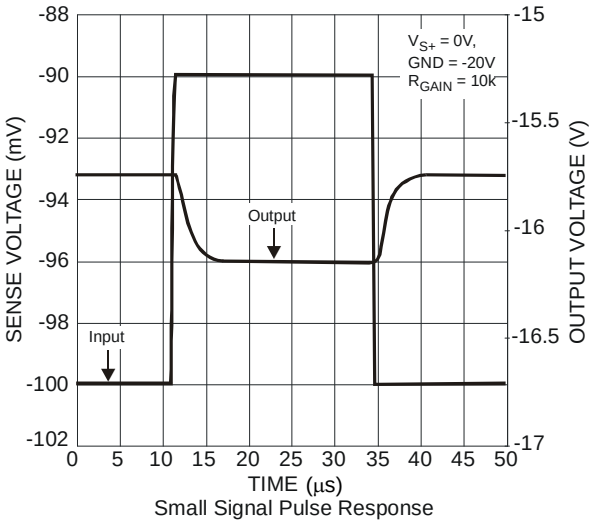

Small Signal Pulse Response

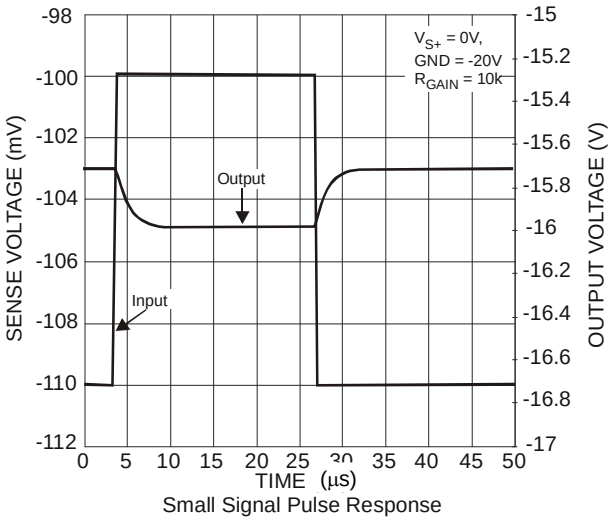

Small Signal Pulse Response

Note: 12. Typical characteristic only and not guaranteed performance.

© Diodes Incorporated

Typical AC Characteristics (Cont.) (Note 12)

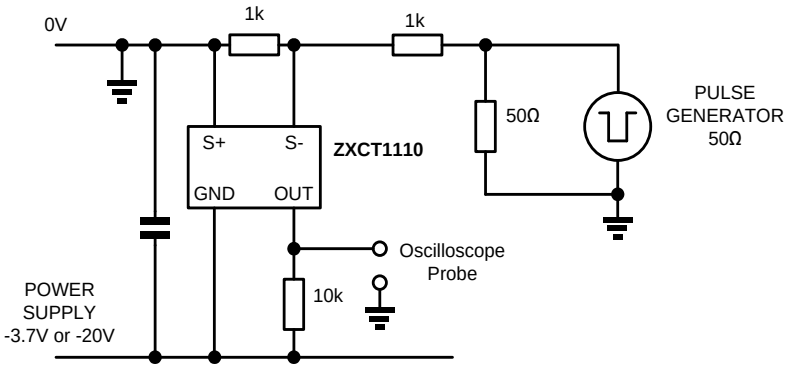

Test Circuit for Pulse Response

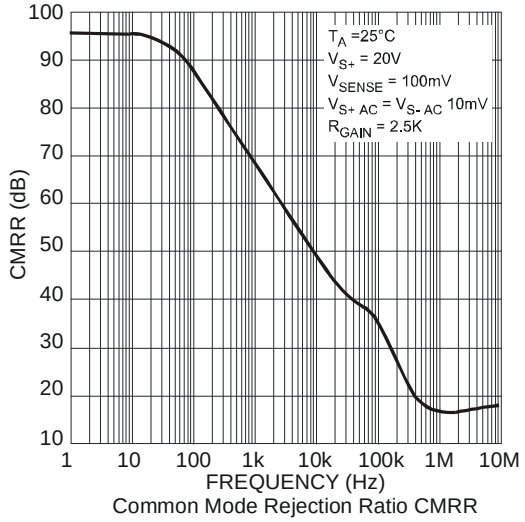

Common Mode Rejection Ratio CMRR

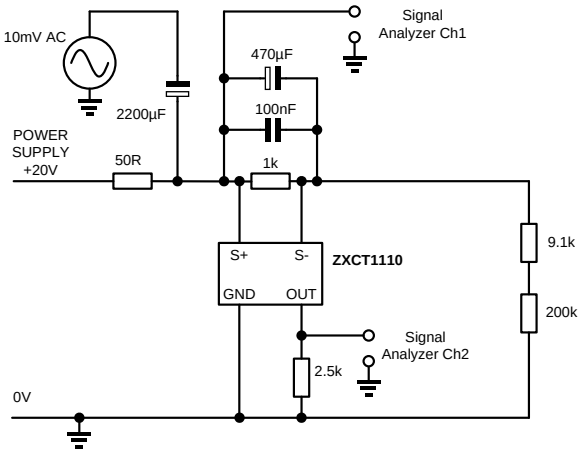

Test circuit for CMRR

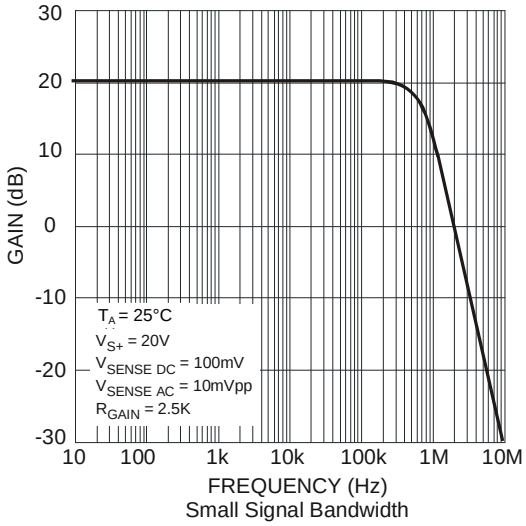

Small Signal Bandwidth

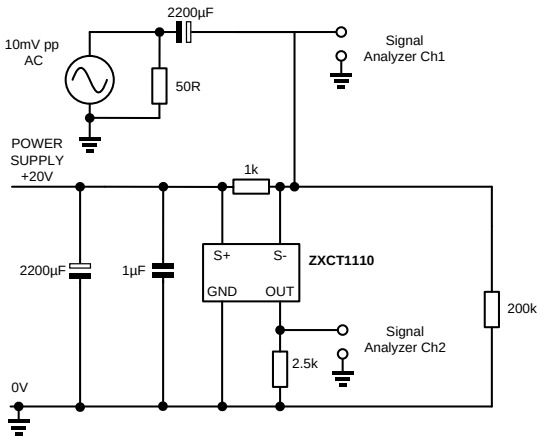

Test circuit for Small signal bandwidth

Note: 12. Typical characteristic only and not guaranteed performance.

© Diodes Incorporated

Application Information

Description

The current monitor ICs ZXCT1107Q, ZXCT1109Q and ZXCT1110Q all use a similar application circuit topology for high-side current sensing, with small differences. The ZXCT1110Q has a separate ground pin whereas the ZXCT1107Q and ZXCT1109Q do not. The use of ZXCT1110Q allows reduction of the absolute current measurement error in some applications by providing a reduced output offset current. The ZXCT1107Q provides a mirror image pin assignment of the ZXCT1109Q to ease PCB layout in very small equipment designs.

The basic application circuit for each device is shown in Figure 1. Two external resistors are required. The resistor R_{SENSE} is connected in the path of the current to be monitored. The resistor R_{GAIN} converts the device output current to a voltage for convenient processing by a further device, such as a comparator, amplifier or analog-to-digital converter within a microcontroller system.

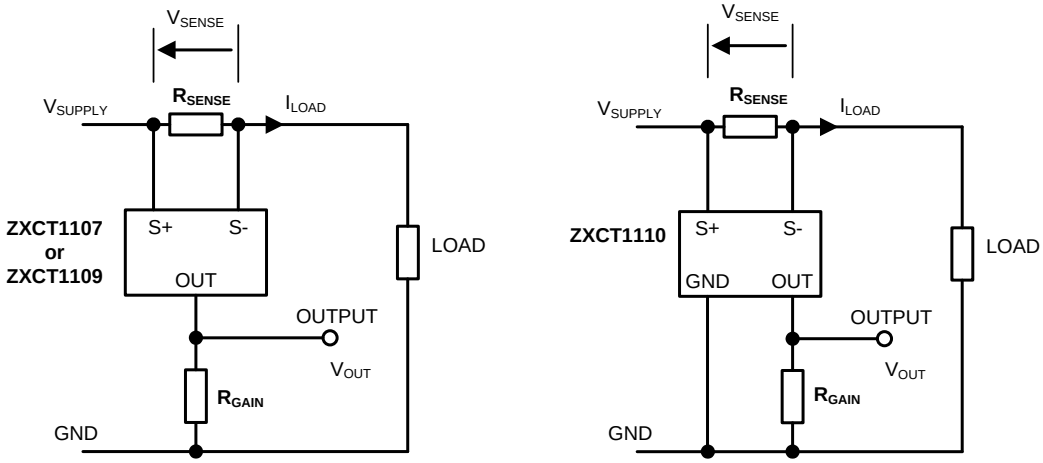

Figure 1 Basic Application Circuit

The current monitor output current is defined through the nominal transconductance of 4mA/V over a $10mV \le V_{SENSE} \le 500mV$.

$$I_{OUT} = 0.004 * V_{SENSE} \quad \text{Amp} \qquad \text{Equation 1}$$

The external resistors, R_{SENSE} and R_{GAIN}, determine the output voltage as described below.

$$V_{OUT} = I_{LOAD} * R_{SENSE} * 0.004 * R_{GAIN} \qquad \text{Equation 2}$$

Measuring currents that result in a V_{SENSE} < 10mV is not recommended because below 10mV the offsets within the ZXCT11xxQ may cause its output current to fall to zero (ZXCT1107Q/09Q's V_{SENSE}=0 I_{OUT} level). This could result in the output current measured not being distinguishable from the no-load current.

Calculation of Resistor Values

In order to select R_{SENSE}, a choice of sense voltage is required. This often involves a compromise between power efficiency and accuracy for the given temperature range. The resistor must be small enough to avoid excessive volt drop between the power supply and the load.

However, the resistor must be large enough to avoid excessive current measurement error, particularly random errors.

In a typical application, a digital system, perhaps a microcontroller, is set up to monitor the current. At a certain threshold current level, I_{LOADT}, the system is required to disconnect the load or report a fault. At this current level, the current measurement error must be limited to a known value. The total percentage error comprises the inherent error in the ZXCT1107Q/09Q/10Q devices and the tolerances of the two resistors R_{SENSE} and R_{GAIN}. The ZXCT1107Q/09Q absolute error is shown in Table 1 with error limits drawn from the table of Electrical Characteristics above. This error varies with V_{SENSE}.

Table 1: ZXCT1107Q/ZXCT1109Q Error

V_{SENSE}	Mean I_{OUT}	Error Band	Percent Error
10mV	45.5µA	±8.5µA	±18.7%
30mV	124.5µA	±9.5µA	±7.6%
100mV	408µA	±14µA	±3.4%
200mV	809.5µA	±22.5µA	±2.8%

© Diodes Incorporated

Application Information (Cont.)

The ZXCT1110Q is highly linear and has a transconductance of 4mA/V ±1.8% and an output of 40µA ±4µA at V_{SENSE}=10mV. The output current can therefore be calculated (Standard International Units) as:

$$I_{OUT} = (40 +/-4)*10^{-6} + (V_{SENSE}-0.01)*(0.004 +/- 0.000072) \ A$$

The worst-case current error is then:

$$I_{OUTERROR} = I_{OUT} – I_{OUTIDEAL} = +/- \{ 4*10^{-6} + (V_{SENSE}-0.01) * 0.000072 \} \ A$$

or $$I_{OUTERROR} = +/- \{ 3.28*10^{-6} + V_{SENSE} * 0.000072 \} \ A$$

The percentage error, ε, is:

$$\varepsilon = \frac{I_{OUTERROR}}{I_{OUTIDEAL}} * 100\% = \frac{I_{OUTERROR}}{V_{SENSE} * 0.004} * 100\%$$

Calculation of Resistor Values (Cont.)

Then $$\varepsilon = \pm \frac{3.28 * 10^{-4} + V_{SENSE} * 0.0072}{V_{SENSE} * 0.004} \ \%$$

or $$\varepsilon = \pm \frac{0.082}{V_{SENSE}} \pm 1.8\%$$ Equation 3

This shows that the error is reduced with increasing V_{SENSE}. Then the minimum V_{SENSE} required to give the error ±ε % is:

$$V_{SENSE} = \frac{0.082}{\varepsilon - 1.8} \ V$$ [*only for ZXCT1110Q*] Equation 4

In the application, the effect of the external resistor tolerances must also be taken into account.

Table 2: ZXCT1110Q Error

V_{SENSE}	Mean I_{OUT}	Error Band	Percent Error
10mV	40µA	±4µA	±10%
30mV	120µA	±5.44µA	±4.53%
100mV	400µA	±10.48µA	±2.62%
200mV	800µA	±17.68µA	±2.21%

Note that in order to avoid additional error, V_{SUPPLY} must be at least 1.5V greater than V_{OUT}. This margin depends on the value of V_{SENSE}. For V_{SENSE} = 100mV, this margin can be reduced to 1.0V.

R_{SENSE} is chosen based on the threshold V_{SENSET} of sense voltage selected as above, for the chosen threshold load current, I_{LOADT}.

$$R_{SENSE} = \frac{V_{SENSET}}{I_{LOADT}}$$ Equation 5

R_{GAIN} is chosen to give the required threshold output voltage, V_{OUTT}. From Equation 1, the threshold output current is:

$$I_{OUTT} = 0.004 * V_{SENSET}$$ Equation 1a

$$R_{GAIN} = \frac{V_{OUTT}}{I_{OUTT}}$$

or $$R_{GAIN} = \frac{V_{OUTT}}{0.004 * V_{SENSET}}$$ Equation 6

© Diodes Incorporated

Application Information (Cont.)

Design Example

A current monitor is required to provide an output voltage of 2V ±6% when the load current of a 12V supply is 2A. Resistors are available with 1% tolerance.

The sense and output resistors will contribute a total possible error of 2%, so the ZXCT11xxQ error must not exceed 4%. From Table 1, the error of ZXCT1107Q/09Q will be 3.4% if the sense voltage is 100mV. This satisfies the total error requirement of 6%.

Equation 5 gives:

$$R_{SENSE} = 100mV/2A = 50m\Omega$$

Equation 6 gives:

$$R_{GAIN} = \frac{2}{0.004 * 0.1} = 5k\Omega$$

A suitable preferred value is 5.1kΩ. This gives a systematic error of +2%, which can be compensated elsewhere in the system if desired. Figure 2 shows the resulting schematic.

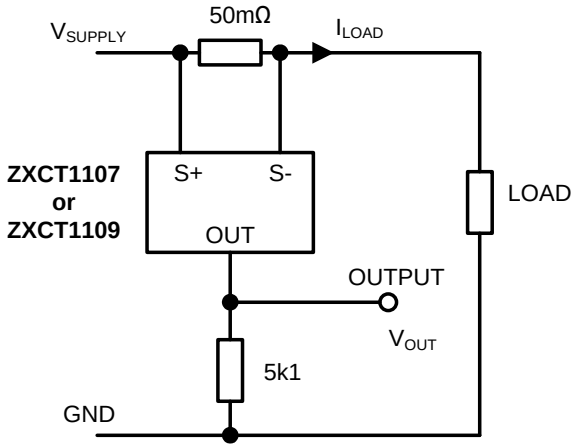

Figure 2 Example Circuit using ZXCT1107Q/09Q

Alternatively, the ZXCT1110Q may be used with a reduced sense voltage if desired. From Equation 4, with ε=4%,

$$V_{SENSE} = \frac{0.082}{\varepsilon - 1.8} = 0.082/(4-1.8) = 37.2mV$$

Equation 5 gives:

$$R_{SENSE} = 37.2mV/2A = 18.6m\Omega$$

A suitable preferred value is 20mΩ. Then the sense voltage will be 2A * 20mΩ = 40mV.

Equation 6 gives:

$$R_{GAIN} = \frac{2}{0.004 * 0.04} = 12500\Omega$$

A suitable preferred value is 13kΩ.

The alternative example circuit using the ZXCT1110Q with a sense voltage of 40mV is shown in Figure 3, giving the required overall accuracy of ±6%.

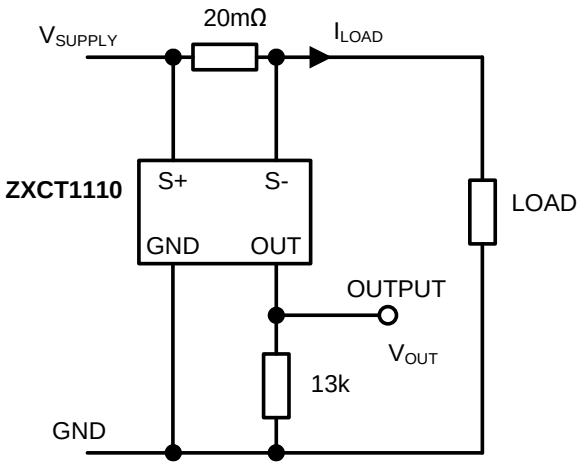

Figure 3 Example Circuit using ZXCT1110Q

© Diodes Incorporated

Application Information (Cont.)

Protection against Load Short Circuit

In the event of a load short circuit or overload, a large proportion of the supply voltage may appear between the sense terminals. The supply may be current limited, but there is normally a large reservoir capacitor which can deliver enough energy to damage the ZXCT11xx before the supply voltage falls to a safe level due to current limit activation.

The ZXCT11xxQ is rated for a maximum sense voltage of +0.8V, but is safe if the input current is limited to ±8.5mA. In Figure 4, the resistor R_{PROT} limits the current and therefore protects the current monitor device against load short circuit without introducing significant current measurement error.

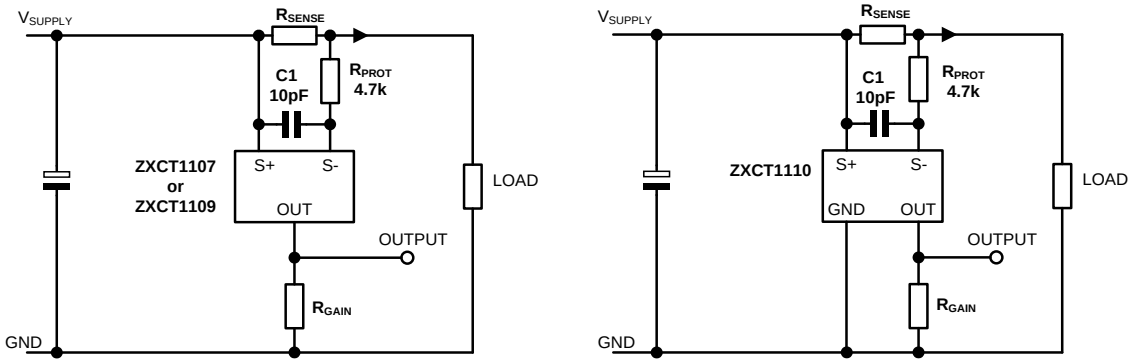

Figure 4 Protection and EMC Filtering

EMC Susceptibility

In many applications, the circuit is required to operate in the presence of RF radiation. This radiation is coupled into the circuit via the supply or load connections and will often cause significant bias shift due to rectification within the integrated circuit. The bias shift may lead to erroneous operation of the integrated circuit. In Figure 4, a low pass filter, R_{PROT} and C1, provides significant attenuation in the VHF and UHF regions. The value of C1 is recommended to be in the range of 10pF to 47pF, leadless ceramic type.

PCB Layout Considerations

It is necessary to take into account a small volt drop in the PCB copper and solder joints to R_{SENSE}. Such volt drops can create noticeable error at currents of the order of 1A and greater. The PCB must be designed to provide the maximum possible copper carrying current via the sense resistor, and the traces from the S+ and S- pins must be connected only to the resistor pads. In this way, the effect of the copper is minimized.

If used, the capacitor C1 should be placed very close the input pins S+ and S-.

Application: High Voltage Current Monitor

The schematic of Figure 5 shows how the current monitor may be used in a high voltage application such as an Electric Vehicle system. In this configuration the 500V PNP transistor Q1 drops a large proportion of the supply voltage. Diode D2 limits the differential input voltage to a safe level under overload conditions. The voltage across U1 is limited by the zener diode D1. The output current of U1 is limited to about 3mA by the D2. As R_{GAIN} is typically a few kΩ the output voltage is therefore limited to a few volts. An additional output clamping diode may be required for higher gains. R1 is chosen to give a suitable bias current in D1 for the given supply voltage range.

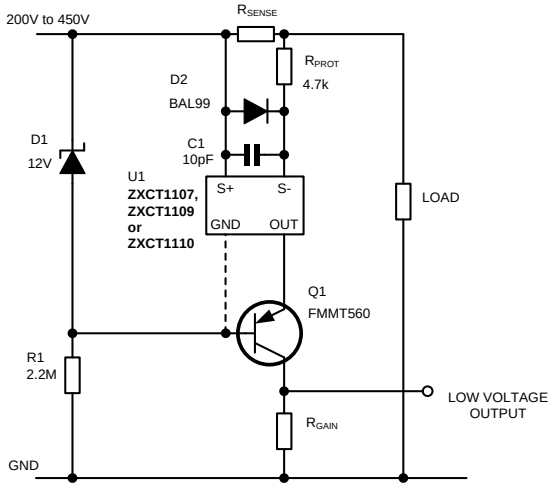

Figure 5 400V Current Monitor

© Diodes Incorporated

Ordering Information

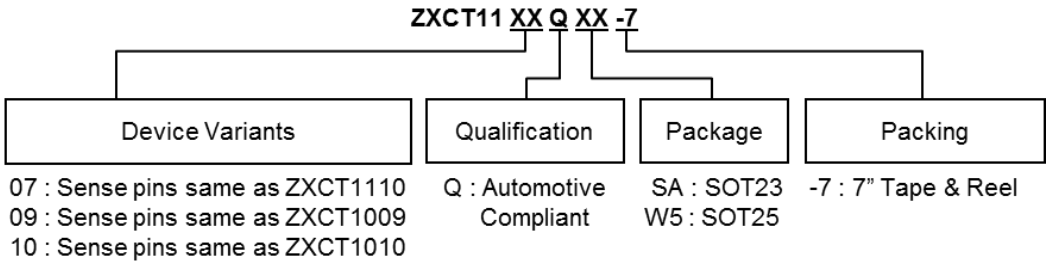

Order Reference	Package (Note 13)	Package Code	Identification Code	Reel Size	Quantity per Reel	Tape Width (mm)	Qualification Grade (Note 14)
ZXCT1107QSA-7	SOT23	SA	1107	7", 180mm	3,000	8	Automotive Compliant
ZXCT1109QSA-7	SOT23	SA	1109	7", 180mm	3,000	8	Automotive Compliant
ZXCT1110QW5-7	SOT25	W5	1110	7", 180mm	3,000	8	Automotive Compliant

Notes: 13. For packaging details, go to our website at https://www.diodes.com/design/support/packaging/diodes-packaging/.
14. Automotive Compliant products are AEC-Q100 qualified and are PPAP capable. Refer to https://www.diodes.com/quality/. See ZXCT1107/09/10 datasheet for commercial qualified versions.

Marking Information

SOT23

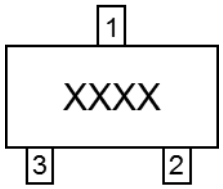

XXXX : Identification code

SOT25

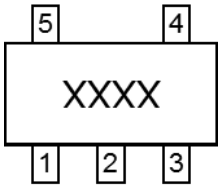

XXXX : Identification code

© Diodes Incorporated

Package Outline Dimensions

Please see http://www.diodes.com/package-outlines.html for the latest version.

SOT23

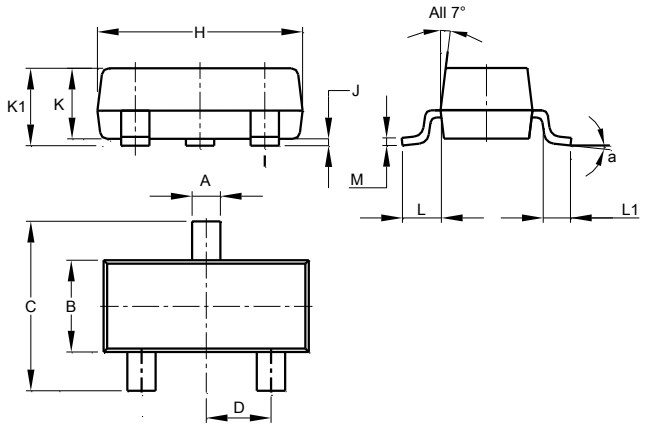

SOT23			
Dim	**Min**	**Max**	**Typ**
A	0.37	0.51	0.40
B	1.20	1.40	1.30
C	2.30	2.50	2.40
D	0.89	1.03	0.915
F	0.45	0.60	0.535
G	1.78	2.05	1.83
H	2.80	3.00	2.90
J	0.013	0.10	0.05
K	0.890	1.00	0.975
K1	0.903	1.10	1.025
L	0.45	0.61	0.55
L1	0.25	0.55	0.40
M	0.085	0.150	0.110
a	8°		
All Dimensions in mm			

SOT25

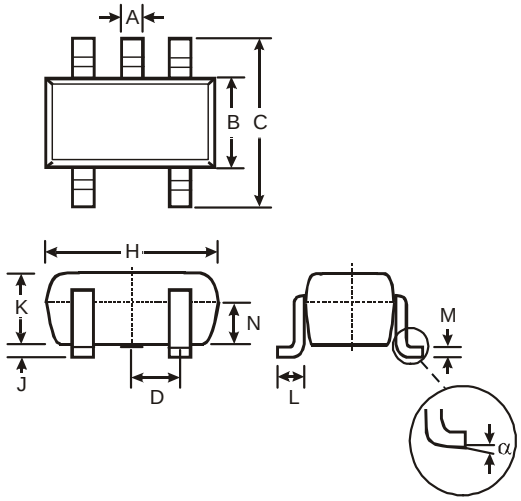

SOT25			
Dim	**Min**	**Max**	**Typ**
A	0.35	0.50	0.38
B	1.50	1.70	1.60
C	2.70	3.00	2.80
D	—	—	0.95
H	2.90	3.10	3.00
J	0.013	0.10	0.05
K	1.00	1.30	1.10
L	0.35	0.55	0.40
M	0.10	0.20	0.15
N	0.70	0.80	0.75
α	0°	8°	—
All Dimensions in mm			

© Diodes Incorporated

Suggested Pad Layout

Please see http://www.diodes.com/package-outlines.html for the latest version.

SOT23

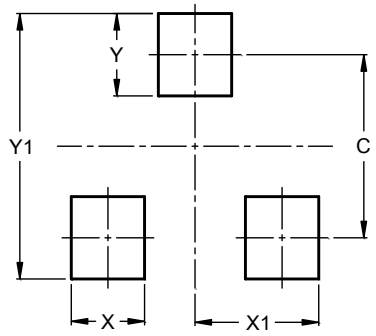

Dimensions	Value (in mm)
C	2.0
X	0.8
X1	1.35
Y	0.9
Y1	2.9

SOT25

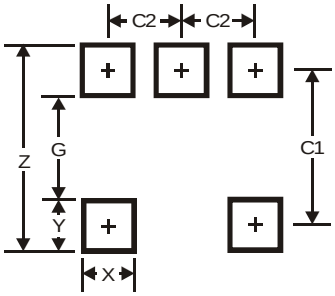

Dimensions	Value (in mm)
Z	3.20
G	1.60
X	0.55
Y	0.80
C1	2.40
C2	0.95

© Diodes Incorporated

IMPORTANT NOTICE

DIODES INCORPORATED MAKES NO WARRANTY OF ANY KIND, EXPRESS OR IMPLIED, WITH REGARDS TO THIS DOCUMENT, INCLUDING, BUT NOT LIMITED TO, THE IMPLIED WARRANTIES OF MERCHANTABILITY AND FITNESS FOR A PARTICULAR PURPOSE (AND THEIR EQUIVALENTS UNDER THE LAWS OF ANY JURISDICTION).

Diodes Incorporated and its subsidiaries reserve the right to make modifications, enhancements, improvements, corrections or other changes without further notice to this document and any product described herein. Diodes Incorporated does not assume any liability arising out of the application or use of this document or any product described herein; neither does Diodes Incorporated convey any license under its patent or trademark rights, nor the rights of others. Any Customer or user of this document or products described herein in such applications shall assume all risks of such use and will agree to hold Diodes Incorporated and all the companies whose products are represented on Diodes Incorporated website, harmless against all damages.

Diodes Incorporated does not warrant or accept any liability whatsoever in respect of any products purchased through unauthorized sales channel. Should Customers purchase or use Diodes Incorporated products for any unintended or unauthorized application, Customers shall indemnify and hold Diodes Incorporated and its representatives harmless against all claims, damages, expenses, and attorney fees arising out of, directly or indirectly, any claim of personal injury or death associated with such unintended or unauthorized application.

Products described herein may be covered by one or more United States, international or foreign patents pending. Product names and markings noted herein may also be covered by one or more United States, international or foreign trademarks.

This document is written in English but may be translated into multiple languages for reference. Only the English version of this document is the final and determinative format released by Diodes Incorporated.

LIFE SUPPORT

Diodes Incorporated products are specifically not authorized for use as critical components in life support devices or systems without the express written approval of the Chief Executive Officer of Diodes Incorporated. As used herein:

A. Life support devices or systems are devices or systems which:

1. are intended to implant into the body, or
2. support or sustain life and whose failure to perform when properly used in accordance with instructions for use provided in the labeling can be reasonably expected to result in significant injury to the user.

B. A critical component is any component in a life support device or system whose failure to perform can be reasonably expected to cause the failure of the life support device or to affect its safety or effectiveness.

Customers represent that they have all necessary expertise in the safety and regulatory ramifications of their life support devices or systems, and acknowledge and agree that they are solely responsible for all legal, regulatory and safety-related requirements concerning their products and any use of Diodes Incorporated products in such safety-critical, life support devices or systems, notwithstanding any devices- or systems-related information or support that may be provided by Diodes Incorporated. Further, Customers must fully indemnify Diodes Incorporated and its representatives against any damages arising out of the use of Diodes Incorporated products in such safety-critical, life support devices or systems.

Copyright © 2018, Diodes Incorporated

www.diodes.com

ENTEGRECİ

Bu belge www.entegreci.com üzerinden sunulmaktadır.

Elektronik komponent tedarikinde Entegreci

Entegreci, Eskişehir merkezli, Türkiye geneline satış yapan bir elektronik komponent mağazasıdır. Entegreler (IC), mikrodenetleyiciler, transistörler, diyotlar, pasif elemanlar, konnektörler, modüller ve geliştirme kartları tek adetten seri üretim adetlerine kadar satılır. Ürün sayfalarında güncel stok durumunu, fiyatı ve datasheet bağlantısını bulabilirsiniz.

Parça koduyla arama

Üretici parça numarasını yazın; stok ve fiyatı hemen görün.

www.entegreci.com

Ürün kategorileri

Entegreden kapasitöre tüm elektronik komponent kategorileri.

Kategorilere göz atın

Üreticiler

Aradığınız üreticinin ürünlerini tek sayfada inceleyin.

Üreticileri görün

Toplu alım ve teklif

Listede olmayan ya da yüksek adetli parçalar için teklif isteyin.

Teklif isteyin

www.entegreci.com | **destek@entegreci.com** | **0850 305 90 34**

Entegreci is an online electronic components store based in Türkiye. Search by manufacturer part number to see stock, prices and datasheets for integrated circuits, microcontrollers, transistors, passive components and connectors, or request a quote for parts that are not listed.

Bu sayfa Entegreci tarafından eklenmiştir. Belgenin önceki sayfaları asıl yayıncısına aittir ve içeriği değiştirilmemiştir; en güncel sürüm için belgenin yayıncısına başvurun.