ZXCT1022
Low offset high-side current monitor

Description

The ZXCT1022 is a precision high-side current sense monitor. Using this type of device eliminates the need to disrupt the ground plane when sensing a load current.

The ZXCT1022 provides a fixed gain of 100 for applications where minimal sense voltage is required.

The very low offset voltage enables a typical accuracy of 3% for sense voltages of only 10mV, giving better tolerances for small sense resistors necessary at higher currents.

The wide input voltage range of 20V down to as low as 2.5V make it suitable for a range of applications. With a minimum operating current of just 25µA, combined with its SOT23-5 package make it suitable for portable battery equipment too.

Features

- Accurate high-side current sensing
- Ground referred output
- 2.5V – 20V supply range
- 25µA quiescent current
- SOT23-5 package

Applications

- Battery chargers
- Smart battery packs
- DC motor control
- Over-current protection
- Power supply current measurement
- Level translating

Pinout information

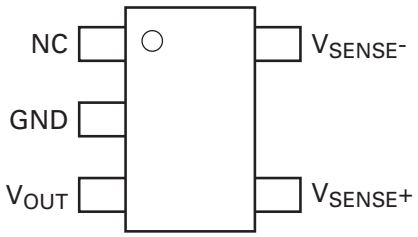

Pinout - top view

Typical application circuit

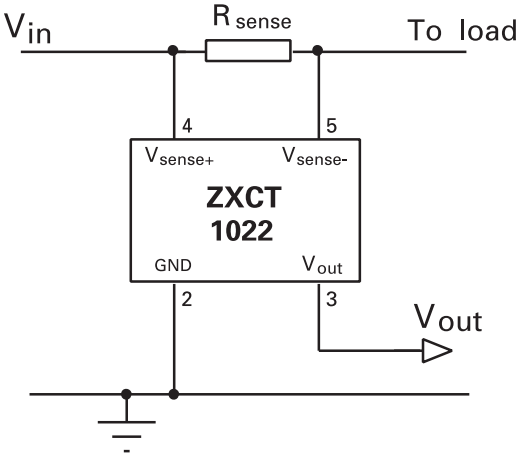

Ordering information

Order reference	Package	Device marking	Status	Reel size (inches)	Quantity per reel	Tape width (mm)
ZXCT1022E5TA	SOT23-5	1022	Active	7	3000	8

© Zetex Semiconductors plc 2008

Absolute maximum ratings

Voltage on V_{s+} (*) pin	-0.6V to 20V
Voltage on V_{s-} (*) (†) V_{OUT} (*)(†) pin	-0.6V to V_{S+} +0.5V
V_{SENSE} (‡)	-0.6V to +0.5V
Operating temperature	-40 to 85°C
Storage temperature	-55 to 150°C
Package power dissipation	(T_A = 25°C)
- SOT23-5	- 450mW

NOTES:
(*) with respect to GND pin
(†) voltage not to exceed 20V
(‡) $V_{SENSE} = V_{S+} - V_{S-}$

Pinout information

Pin name	Pin function
N/C	Not internally connected
GND	Ground
V_{OUT}	Voltage output referenced to GND. Intended to drive high impedance loads
$V_{S–}$	High impedance negative sense voltage input
V_{S+}	Supply and positive sense voltage input

© Zetex Semiconductors plc 2008

Electrical characteristics test conditions T_{amb} = 25°C, V_{IN} = 15V

Symbol	Parameter	Conditions	Limits			Unit
			Min.	Typ.	Max.	
V_{IN}	V_{CC} range		2.5		20	V
V_{OUT}	Output voltage	V_{SENSE} = 0V	0	30	100	mV
		V_{SENSE} = 10mV	0.97	1.0	1.03	V
		V_{SENSE} = 30mV	2.91	3.0	3.09	V
		V_{SENSE} = 100mV	9.7	10.0	10.3	V
R_{OUT}	Output resistance		10	15	20	kΩ
T_C (*)	Output temperature coefficient			50	300	ppm
I_Q	Ground pin current	V_{SENSE} = 0V		25	35	μA
V_{SENSE} (†)	Sense voltage	V_{IN} = 20V	0		180 (‡)	mV
I_{SENSE}	Load pin current	V_{SENSE} = 0V			100	nA
Acc	Accuracy	V_{SENSE} = 10mV	-3		3	%
Gain	V_{OUT} / V_{SENSE}	V_{SENSE} = 10mV	97	100	103	V/V
BW	Bandwidth	V_{SENSE} = 10mV		300		kHz
		V_{SENSE} = 100mV		2		MHz

NOTES:
(*) T_C limits are determined by characterization
(†) $V_{SENSE} = V_{IN} - V_{LOAD}$
(‡) For linear operation maximum V_{SENSE} is limited by operating voltage and is approximately:

$$V_{SENSE} = \frac{(V_{IN} - 2)}{100}$$

© Zetex Semiconductors plc 2008

Typical characteristics

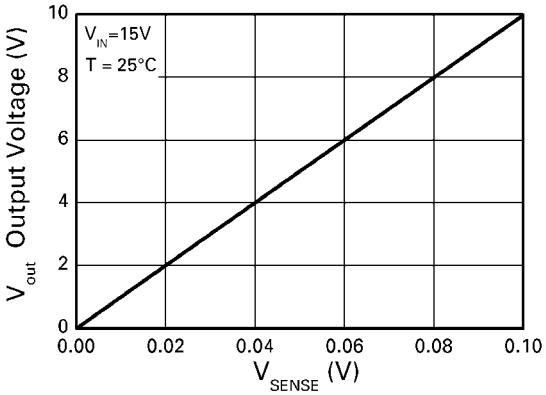

Typical Output v Sense Voltage

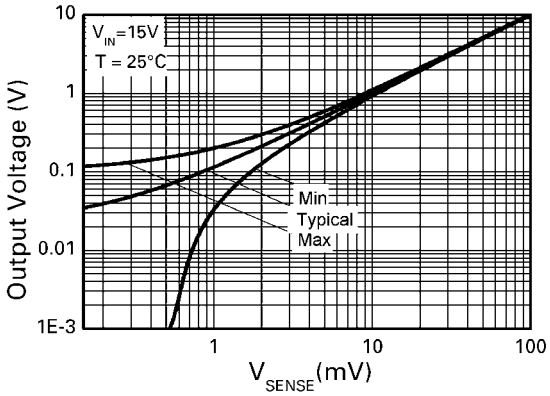

Error v Sense Voltage

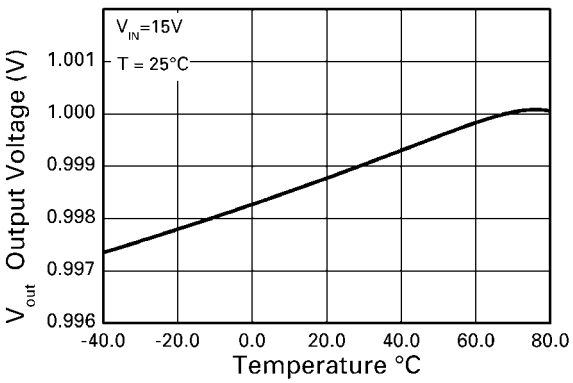

Output Voltage v Temperature

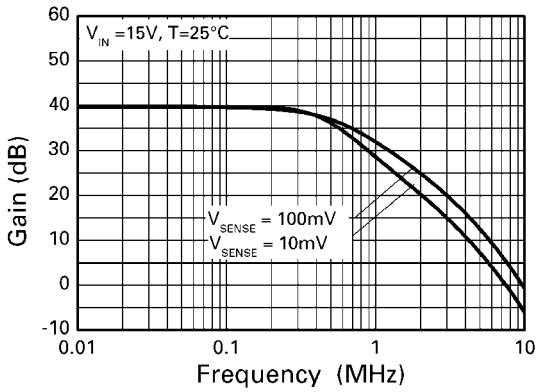

Frequency Response

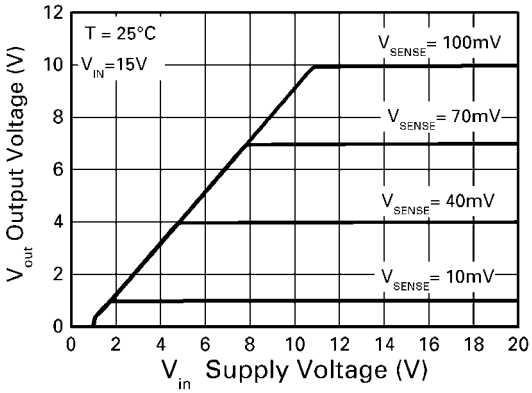

Transfer Characteristic

© Zetex Semiconductors plc 2008

Typical characteristics

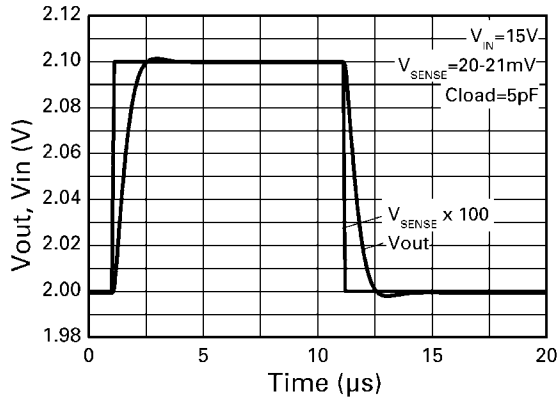

Small Signal Step Response

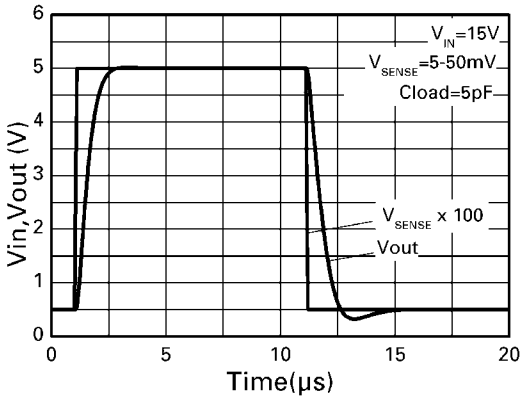

Large Signal Step Response

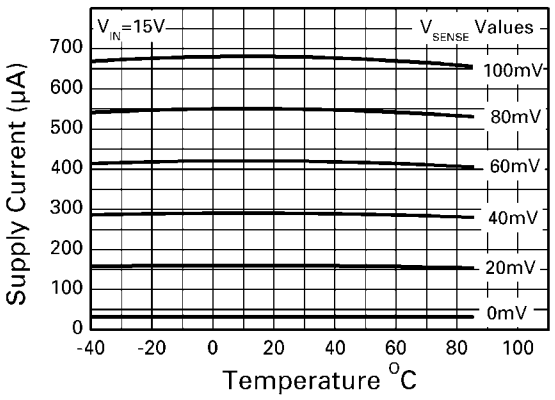

Isupply v Temperature

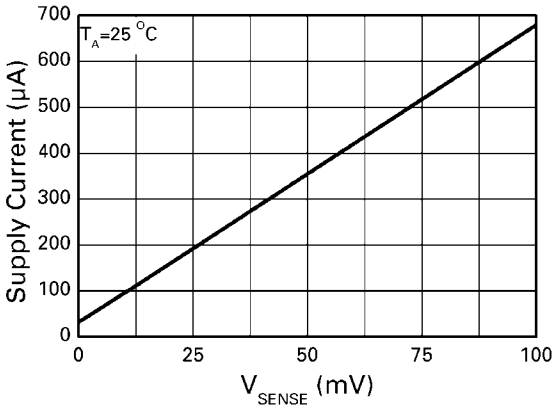

Isupply v Vsense

© Zetex Semiconductors plc 2008

Application information

The ZXCT1022 has a fixed dc voltage gain of 100. No external scaling resistors are required for the output. Output voltage is simply defined as:

$$V_{OUT} = 100 \times V_{SENSE} \text{ (V)}$$

Where $V_{SENSE} = V_{IN} - V_{LOAD}$

PCB trace shunt resistor for low cost solution

Figure 1 shows a PCB layout suggestion for a low cost solution where a PCB resistive trace in replacement for a conventional shunt resistor, can be used. The resistor section is 25mm x 0.25mm giving approximately 150mΩ using 1 oz copper. Smaller resistances can be used if required.

Total circuit solution: 1 component. Shows area of 150mΩ sense resistor compared to SOT23 package.

Practical tolerance of the PCB resistor will be around 5% depending on manufacturing methods.

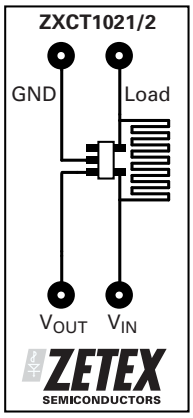

Figure 1 PCB layout suggestion

© Zetex Semiconductors plc 2008

Package outline - SOT23-5

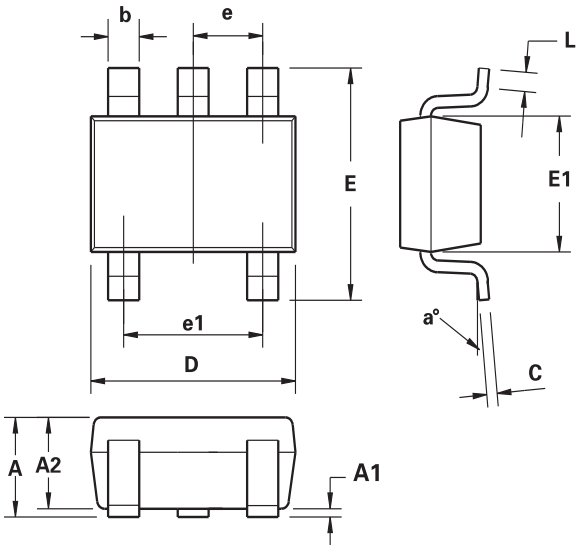

DIM	Millimeters		Inches	
	Min.	Max.	Min.	Max.
A	0.90	1.45	0.0354	0.0570
A1	0.00	0.15	0.00	0.0059
A2	0.90	1.30	0.0354	0.0511
b	0.20	0.50	0.0078	0.0196
C	0.09	0.26	0.0035	0.0102
D	2.70	3.10	0.1062	0.1220
E	2.20	3.20	0.0866	0.1181
E1	1.30	1.80	0.0511	0.0708
e	0.95 REF		0.0374 REF	
e1	1.90 REF		0.0748 REF	
L	0.10	0.60	0.0039	0.0236
a°	0°	30°	0°	30°

Note: Controlling dimensions are in millimeters. Approximate dimensions are provided in inches

© Zetex Semiconductors plc 2008

Definitions

Product change

Zetex Semiconductors reserves the right to alter, without notice, specifications, design, price or conditions of supply of any product or service. Customers are solely responsible for obtaining the latest relevant information before placing orders.

Applications disclaimer

The circuits in this design/application note are offered as design ideas. It is the responsibility of the user to ensure that the circuit is fit for the user's application and meets with the user's requirements. No representation or warranty is given and no liability whatsoever is assumed by Zetex with respect to the accuracy or use of such information, or infringement of patents or other intellectual property rights arising from such use or otherwise. Zetex does not assume any legal responsibility or will not be held legally liable (whether in contract, tort (including negligence), breach of statutory duty, restriction or otherwise) for any damages, loss of profit, business, contract, opportunity or consequential loss in the use of these circuit applications, under any circumstances.

Life support

Zetex products are specifically not authorized for use as critical components in life support devices or systems without the express written approval of the Chief Executive Officer of Zetex Semiconductors plc. As used herein:

A. Life support devices or systems are devices or systems which:
   1. are intended to implant into the body

or

   2. support or sustain life and whose failure to perform when properly used in accordance with instructions for use provided in the labeling can be reasonably expected to result in significant injury to the user.

B. A critical component is any component in a life support device or system whose failure to perform can be reasonably expected to cause the failure of the life support device or to affect its safety or effectiveness.

Reproduction

The product specifications contained in this publication are issued to provide outline information only which (unless agreed by the company in writing) may not be used, applied or reproduced for any purpose or form part of any order or contract or be regarded as a representation relating to the products or services concerned.

Terms and Conditions

All products are sold subjects to Zetex' terms and conditions of sale, and this disclaimer (save in the event of a conflict between the two when the terms of the contract shall prevail) according to region, supplied at the time of order acknowledgement.

For the latest information on technology, delivery terms and conditions and prices, please contact your nearest Zetex sales office.

Quality of product

Zetex is an ISO 9001 and TS16949 certified semiconductor manufacturer.

To ensure quality of service and products we strongly advise the purchase of parts directly from Zetex Semiconductors or one of our regionally authorized distributors. For a complete listing of authorized distributors please visit: **www.zetex.com/salesnetwork**

Zetex Semiconductors does not warrant or accept any liability whatsoever in respect of any parts purchased through unauthorized sales channels.

ESD (Electrostatic discharge)

Semiconductor devices are susceptible to damage by ESD. Suitable precautions should be taken when handling and transporting devices. The possible damage to devices depends on the circumstances of the handling and transporting, and the nature of the device. The extent of damage can vary from immediate functional or parametric malfunction to degradation of function or performance in use over time. Devices suspected of being affected should be replaced.

Green compliance

Zetex Semiconductors is committed to environmental excellence in all aspects of its operations which includes meeting or exceeding regulatory requirements with respect to the use of hazardous substances. Numerous successful programs have been implemented to reduce the use of hazardous substances and/or emissions.

All Zetex components are compliant with the RoHS directive, and through this it is supporting its customers in their compliance with WEEE and ELV directives.

Product status key:

"Preview"	Future device intended for production at some point. Samples may be available
"Active"	Product status recommended for new designs
"Last time buy (LTB)"	Device will be discontinued and last time buy period and delivery is in effect
"Not recommended for new designs"	Device is still in production to support existing designs and production
"Obsolete"	Production has been discontinued

Datasheet status key:

"Draft version"	This term denotes a very early datasheet version and contains highly provisional information, which may change in any manner without notice.
"Provisional version"	This term denotes a pre-release datasheet. It provides a clear indication of anticipated performance. However, changes to the test conditions and specifications may occur, at any time and without notice.
"Issue"	This term denotes an issued datasheet containing finalized specifications. However, changes to specifications may occur, at any time and without notice.

Zetex sales offices

Europe	Americas	Asia Pacific	Corporate Headquarters
Zetex GmbH Kustermann-park Balanstraße 59 D-81541 München Germany	Zetex Inc 700 Veterans Memorial Highway Hauppauge, NY 11788 USA	Zetex (Asia Ltd) 3701-04 Metroplaza Tower 1 Hing Fong Road, Kwai Fong Hong Kong	Zetex Semiconductors plc Zetex Technology Park, Chadderton Oldham, OL9 9LL United Kingdom
Telefon: (49) 89 45 49 49 0 Fax: (49) 89 45 49 49 49 europe.sales@zetex.com	Telephone: (1) 631 360 2222 Fax: (1) 631 360 8222 usa.sales@zetex.com	Telephone: (852) 26100 611 Fax: (852) 24250 494 asia.sales@zetex.com	Telephone: (44) 161 622 4444 Fax: (44) 161 622 4446 hq@zetex.com

© 2007 Published by Zetex Semiconductors plc

© Zetex Semiconductors plc 2008

ENTEGRECİ

Bu belge www.entegreci.com üzerinden sunulmaktadır.

Elektronik komponent tedarikinde Entegreci

Entegreci, Eskişehir merkezli, Türkiye geneline satış yapan bir elektronik komponent mağazasıdır. Entegreler (IC), mikrodenetleyiciler, transistörler, diyotlar, pasif elemanlar, konnektörler, modüller ve geliştirme kartları tek adetten seri üretim adetlerine kadar satılır. Ürün sayfalarında güncel stok durumunu, fiyatı ve datasheet bağlantısını bulabilirsiniz.

Parça koduyla arama

Üretici parça numarasını yazın; stok ve fiyatı hemen görün.

www.entegreci.com

Ürün kategorileri

Entegreden kapasitöre tüm elektronik komponent kategorileri.

Kategorilere göz atın

Üreticiler

Aradığınız üreticinin ürünlerini tek sayfada inceleyin.

Üreticileri görün

Toplu alım ve teklif

Listede olmayan ya da yüksek adetli parçalar için teklif isteyin.

Teklif isteyin

www.entegreci.com | **destek@entegreci.com** | **0850 305 90 34**

Entegreci is an online electronic components store based in Türkiye. Search by manufacturer part number to see stock, prices and datasheets for integrated circuits, microcontrollers, transistors, passive components and connectors, or request a quote for parts that are not listed.

Bu sayfa Entegreci tarafından eklenmiştir. Belgenin önceki sayfaları asıl yayıncısına aittir ve içeriği değiştirilmemiştir; en güncel sürüm için belgenin yayıncısına başvurun.