ZXCT1011
High-side low drift current monitor

Description

The ZXCT1011 is a high side current sense monitor. Using this type of device eliminates the need to disrupt the ground plane when sensing a load current.

The ZXCT1011 takes the voltage developed across a current shunt resistor and translates it into a proportional output current.

A user defined output resistor scales the output current into a ground referenced voltage.

A current reference resistor, external to the IC, results in an improved temperature coefficient compared to the ZXCT1009.

The wide input voltage range of 20V down to as low as 2.5V make it suitable for a range of applications. With a minimum operating current of just 4uA, combined with its SOT23-5 package make it suitable for portable battery equipment too.

Features

- Accurate high-side current sensing
- 2.5V to 20V supply range
- 4 µA quiescent current
- 1% typical accuracy
- Package SOT23-5
- Temperature range -40 to 125°C

Applications

- Automotive current measurement
- Battery management
- DC motor and solenoid control
- Over current monitor
- Power management

Typical application circuit

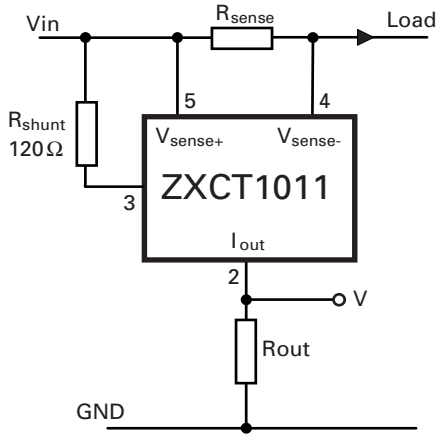

Pin connections

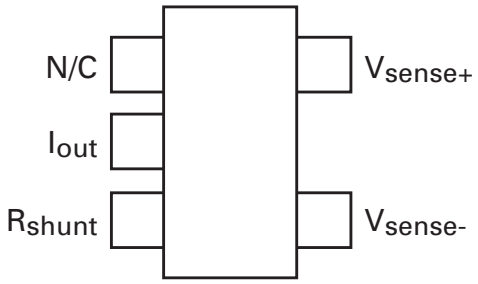

Ordering information

Order code	Pack	Part mark	Reel Size inches (mm)	Tape width	Quantity Per reel
ZXCT1011E5TA	SOT23-5	1011	7 (180)	8mm	3,000

© Zetex Semiconductors plc 2005

Absolute maximum ratings

V_{sense+}	20 V
Voltage on any pin	0.6V and V_{sense+} +0.5V
V_{sense+} to V_{sense-}	2.5V
Operating temperature	-40 to 125°C
Storage temperature	-55 to 150°C
Maximum junction temperature	150°C
Package power dissipation	300mW at T_A = 25°C (De-rate to zero at 150°C)

Operation above the absolute maximum rating may cause device failure. Operation at the absolute maximum ratings, for extended periods, may reduce device reliability.

Electrical characteristics

Test conditions T_A = 25°C, V_{in} = 5V, R_{shunt} = 120Ω. V_{sense}=100mV. Unless otherwise stated.

Symbol	Parameter	Conditions	Min	Typ.	Max	Units
V_{in}*	Supply range	-	2.5	-	20	V
I_{out}	Output current	V_{sense} = 0V =10mV =30mV =100mV =200mV =500mV	1 84 273 0.97 1.95 4.85	4 116 320 1.00 2.00 5.00	15 124 330 1.03 2.05 5.15	µA µA µA mA mA mA
V_{sense}	Sense voltage†	-	0	-	500	mV
$I_{sense\ -}$	V_{sense-} input current	-	-	-	100	nA
Acc	Accuracy	R_{sense} = 0.1Ω V_{sense} = 100mV	-3	-	3	%
g_m	Transconductance I_{out}/V_{sense}	R_{shunt} = 120Ω	-	10	-	mA/V
Tc	Temperature coefficient‡	-	-	30	150	ppm/° C
BW**	Bandwidth	V_{sense} = 10mV CL = 5pF, R_{out} = 1kΩ V_{sense} = 100mV CL = 5pF, R_{out} = 1kΩ	-	400 1.5	-	kHz MHz
PSSR	Supply rejection	V_{sense} = 200mV, R_{out}=1kΩ	-	68	-	dB

NOTES:

* V_{sense+} relative to I_{out}.

† V_{sense} = (V_{sense+}) - (V_{sense-}).

‡ Temperature dependent measurements are extracted from characterization and simulation results.

** Where CL is the capacitance across R_{out}.

© Zetex Semiconductors plc 2005

Typical characteristics

T_A=25°C, R_{shunt} = 120 unless otherwise stated.

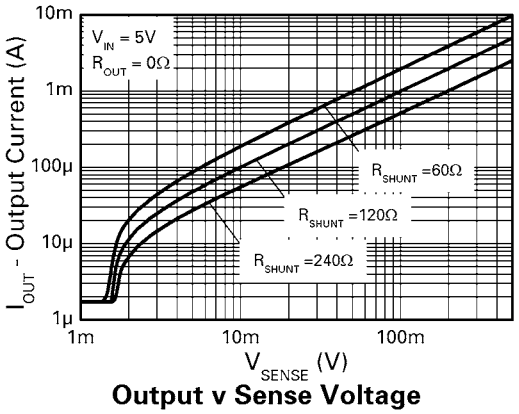

Output v Sense Voltage

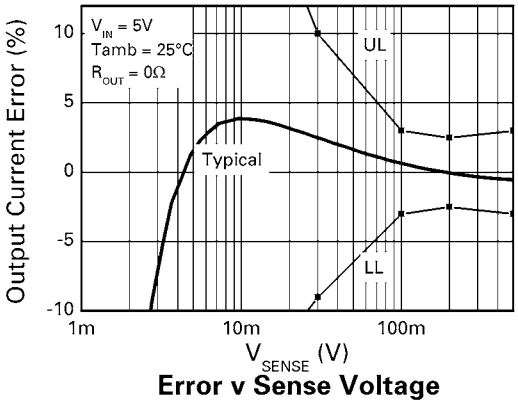

Error v Sense Voltage

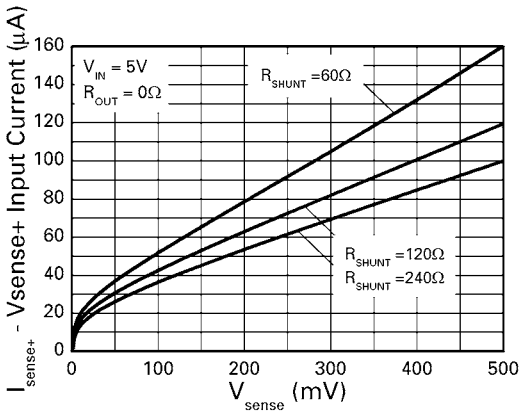

Vsense+ Current v Sense Voltage

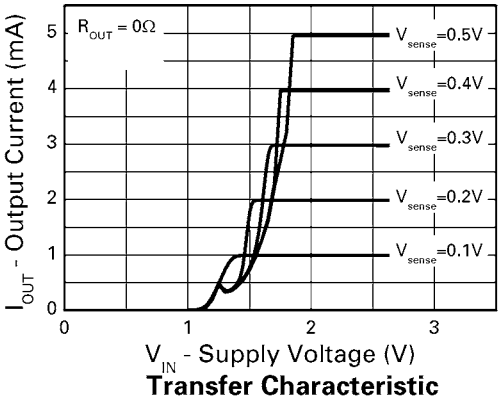

Transfer Characteristic

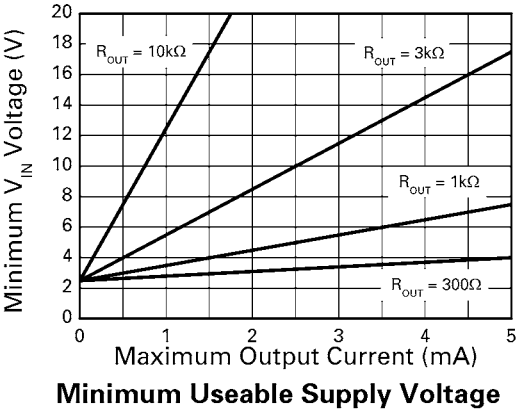

Minimum Useable Supply Voltage

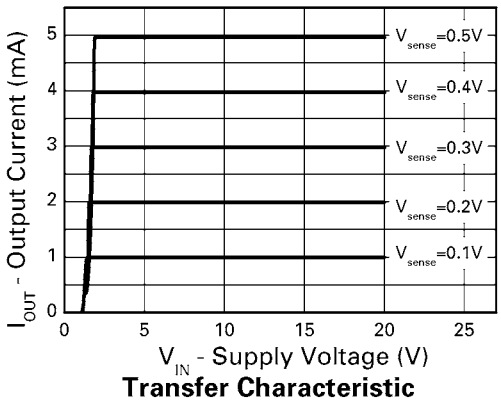

Transfer Characteristic

© Zetex Semiconductors plc 2005

Typical characteristics

T_A=25°C, R_{shunt} = 120 Ω unless otherwise stated.

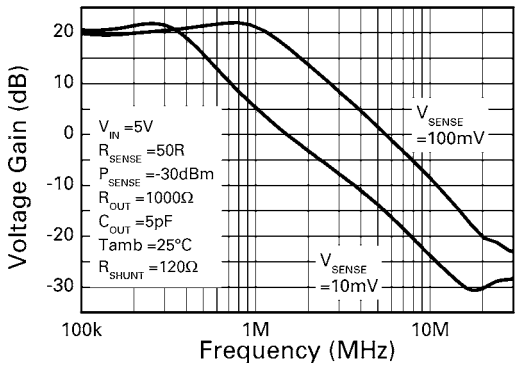

Frequency Response

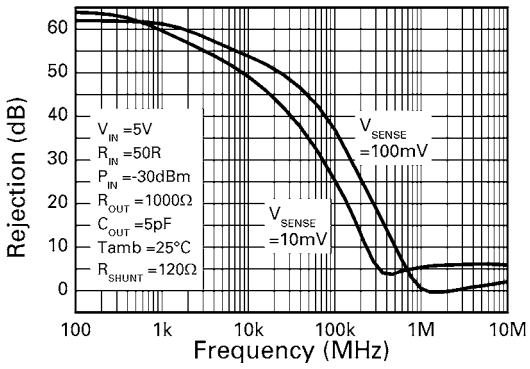

Common Mode Rejection

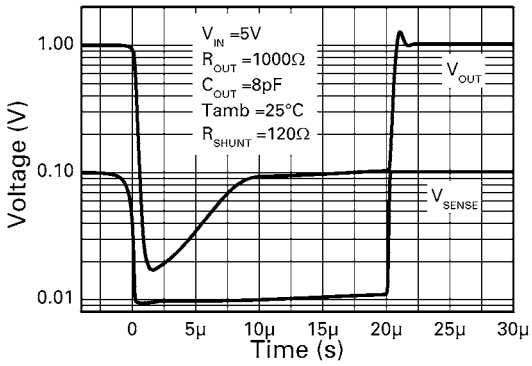

Large Signal Step Response

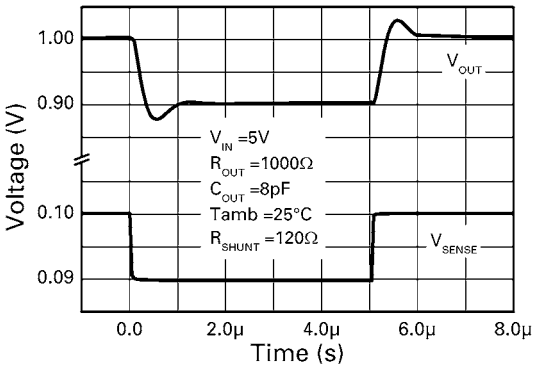

Small Signal Step Response

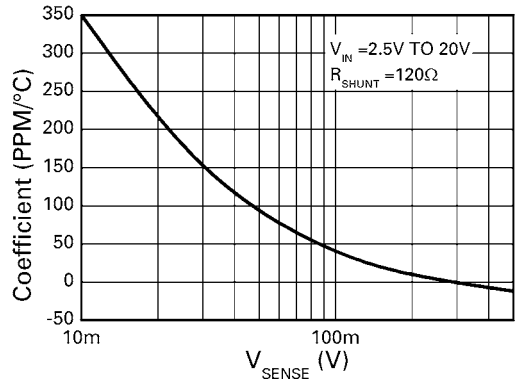

Transconductance v Temperature

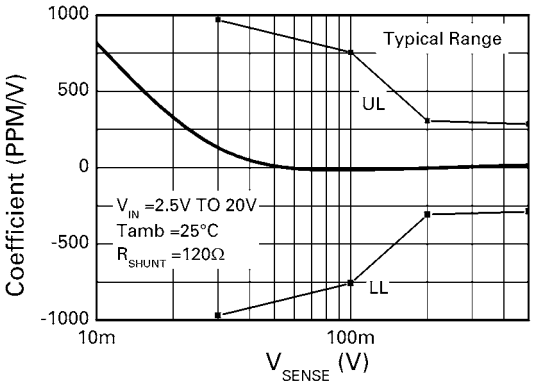

Transconductance v Voltage

© Zetex Semiconductors plc 2005

Pin description

Pin no.	Pin name	Pin function
1	N/C	No connection
2	I_{out}	Output current - follows transconductance of sense voltage g_m = 10mA/V for R_{shunt}=120Ω
3	R_{shunt}	Trimming resistor Input. - used to trim gain value $60\Omega \leq R_{shunt} \leq 240\Omega$
4	V_{sense-}	Low side current sense input. – connect to load/battery etc. Must be lower than V_{sense+} for correct operation. Cannot be grounded without additional series resistor.
5	V_{sense+}	High side current sense input. – Connect to supply rail. Must be higher than V_{sense+} for correct operation.

Application information

Design example

The following lines describe how to scale a load current to an output voltage.

$$V_{sense} = (V_{sense+}) - (V_{sense-}) = I_{load} \times R_{sense}$$

Defining then $I_{out} = Iq + V_{sense} \times g_m$

since $g_m = 1.2 / R_{shunt}$

$$I_{out} = Iq + [(V_{sense} \times 1.2) / R_{shunt}]$$

$$= Iq + [(1.2 \times I_{load} \times R_{sense} / R_{shunt})]$$

Note: Iq is embedded into the specification of the ZXCT1011 and therefore appears an offset error.

$$\therefore V_{out} = (R_{out} \times I_{offset}) + [(1.2 \times R_{out} \times I_{load} \times R_{sense}) / R_{shunt}]$$

The output current of the ZXCT1011 is directly related to the size of the trimming resistor used. It is important to ensure the tolerance of R_{shunt} is considered. A 1% change in R_{shunt} will cause a 1% change in output.

Consider the following: -

© Zetex Semiconductors plc 2005

A 1 ampere load current is to be measured into a battery. The output signal required to an over current controller needs to be 3.3V. What is a suitable value of R_{out} and what will the error due to the supply current be?

V_{in} = 5.0V - 9.0V

I_{load} = 1.0A

Output signal required: 3.3V

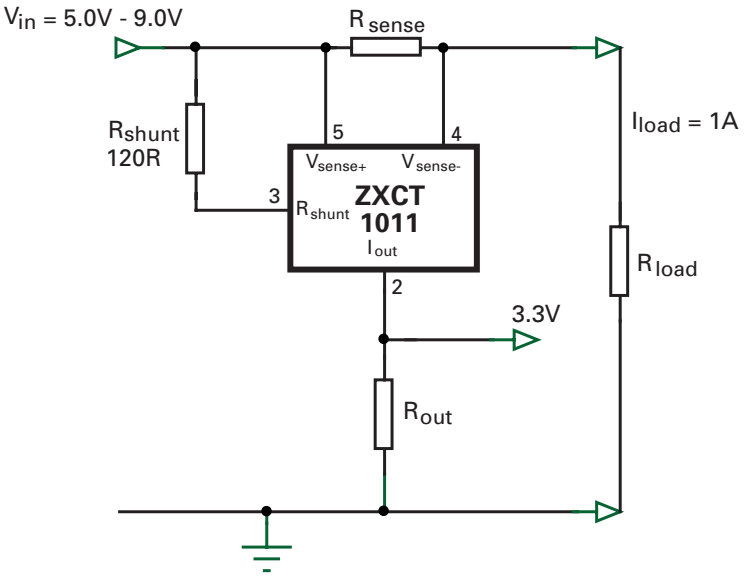

Figure 1 ZXCT1011 to measure a 1.0 A load current

To obtain the highest accuracy, choose the of R_{sense} to give 100mV:

$$R_{sense} = 0.1/1.0 = 0.1\Omega$$

The transconductance using a 120Ω resistor will be 10mA/V.

Choose R_{out} to give V_{out} = 3.3V, when V_{sense} = 100mV

Rearranging equation 1 without the offset error gives:

$$R_{out} = (V_{out} \times R_{shunt}) / (1.2 \times I_{Load} \times R_{sense})$$

$$\mathbf{R_{out} = 3.3k\Omega}$$

Now consider the offset error for this resistor:

Offset due to supply current = $R_{out} \times 4x10^{-6}\mu A$ = 13.2mV = 0.4%

© Zetex Semiconductors plc 2005

Application information (cont.)

Minimum operating voltage

The minimum operating voltage of the ZXCT1011 is 2.5V and is defined as the difference between V_{sense+} and the I_{out} pin. It must be ensured that sufficient headroom is given for the operation of the device when considering R_{out}.

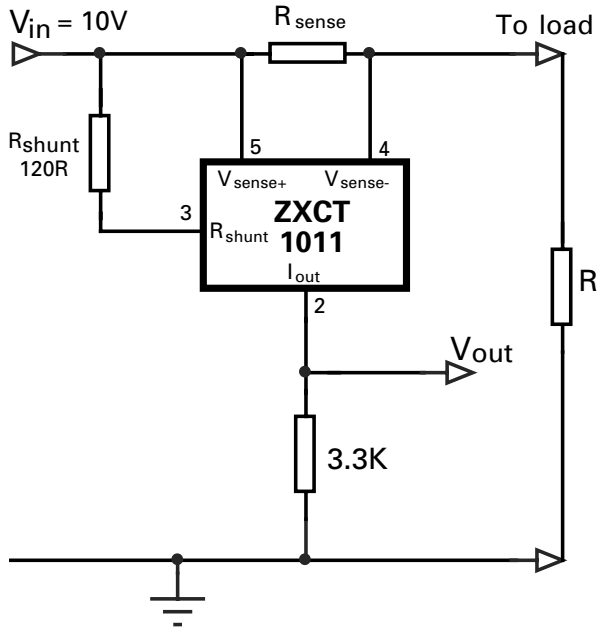

Figure 2 Considerations for supply rail

Voltage across device 2.5V

V_{in} - V_{out} 2.5V

Where $V_{out} = I_{out} \times R_{out}$

At low supply voltages and high Vsense measurements, special care must be taken to ensure the correct operation.

The circuit in figure 2.0 shows a ZXCT1011 operating from 10V supply rail. The minimum operating voltage of the ZXCT1011 is 2.5V. This allows a maximum output voltage of 7.5V to be set at V_{out}. A 3k resistor on the output would draw a maximum 2.5mA from Iout. - See minimum usable supply voltage graph on page 4.

© Zetex Semiconductors plc 2005

Packaging details - SOT23-5

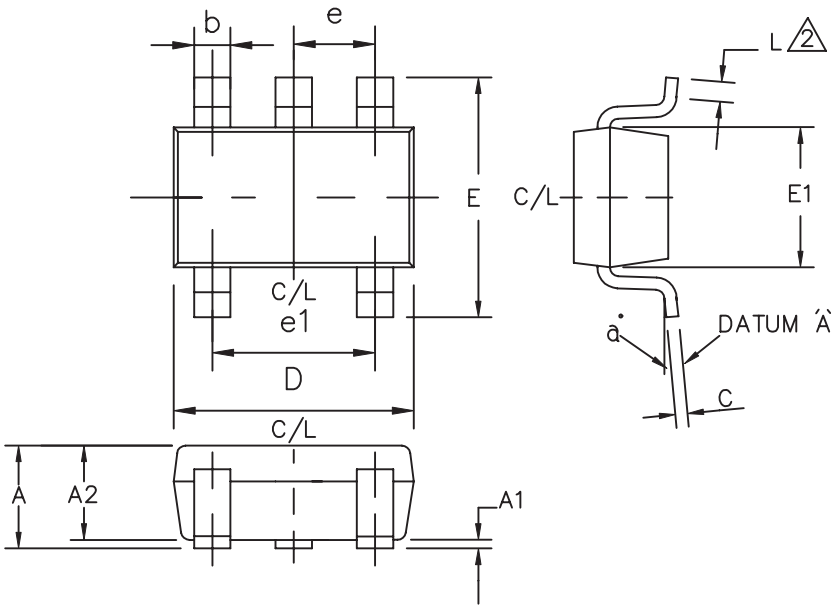

DIM	MILLIMETRES		INCHES	
	MIN	MAX	MIN	MAX
A	0.90	1.45	0.0354	0.0570
A1	0.00	0.15	0.00	0.0059
A2	0.90	1.30	0.0354	0.0511
b	0.20	0.50	0.0078	0.0196
C	0.09	0.26	0.0035	0.0102
D	2.70	3.10	0.1062	0.1220
E	2.20	3.20	0.0866	0.1181
E1	1.30	1.80	0.0511	0.0708
L	0.10	0.60	0.0039	0.0236
e	0.95 REF		0.0374 REF	
e1	1.90 REF		0.0748 REF	
a	0°	30°	0°	30°

NOTE

1 ALL DIMENSIONS ARE IN MILLIMETRES .
2 FOOT LENGTH MEASURED REFERENCE TO FLAT FOOT SURFACE PARALLEL TO DATUM 'A' .
3 PACKAGE OUTLINE EXCLUSIVE OF MOLD FLASH AND METAL BURR.
4 COMPLY TO EIAJ SC74A.

Europe
Zetex GmbH
Streitfeldstraße 19
D-81673 München
Germany

Telefon: (49) 89 45 49 49 0
Fax: (49) 89 45 49 49 49
europe.sales@zetex.com

Americas
Zetex Inc
700 Veterans Memorial Highway
Hauppauge, NY 11788
USA

Telephone: (1) 631 360 2222
Fax: (1) 631 360 8222
usa.sales@zetex.com

Asia Pacific
Zetex (Asia Ltd)
3701-04 Metroplaza Tower 1
Hing Fong Road, Kwai Fong
Hong Kong

Telephone: (852) 26100 611
Fax: (852) 24250 494
asia.sales@zetex.com

Corporate Headquarters
Zetex Semiconductors plc
Zetex Technology Park, Chadderton
Oldham, OL9 9LL
United Kingdom

Telephone (44) 161 622 4444
Fax: (44) 161 622 4446
hq@zetex.com

These offices are supported by agents and distributors in major countries world-wide.
This publication is issued to provide outline information only which (unless agreed by the company in writing) may not be used, applied or reproduced for any purpose or form part of any order or contact or be regarded as a representation relating to the products or services concerned. The company reserves the right to alter without notice the specification, design, price or conditions of supply of any product or service.

© Zetex Semiconductors plc 2005

ENTEGRECİ

Bu belge www.entegreci.com üzerinden sunulmaktadır.

Elektronik komponent tedarikinde Entegreci

Entegreci, Eskişehir merkezli, Türkiye geneline satış yapan bir elektronik komponent mağazasıdır. Entegreler (IC), mikrodenetleyiciler, transistörler, diyotlar, pasif elemanlar, konnektörler, modüller ve geliştirme kartları tek adetten seri üretim adetlerine kadar satılır. Ürün sayfalarında güncel stok durumunu, fiyatı ve datasheet bağlantısını bulabilirsiniz.

Parça koduyla arama

Üretici parça numarasını yazın; stok ve fiyatı hemen görün.

www.entegreci.com

Ürün kategorileri

Entegreden kapasitöre tüm elektronik komponent kategorileri.

Kategorilere göz atın

Üreticiler

Aradığınız üreticinin ürünlerini tek sayfada inceleyin.

Üreticileri görün

Toplu alım ve teklif

Listede olmayan ya da yüksek adetli parçalar için teklif isteyin.

Teklif isteyin

www.entegreci.com | **destek@entegreci.com** | **0850 305 90 34**

Entegreci is an online electronic components store based in Türkiye. Search by manufacturer part number to see stock, prices and datasheets for integrated circuits, microcontrollers, transistors, passive components and connectors, or request a quote for parts that are not listed.

Bu sayfa Entegreci tarafından eklenmiştir. Belgenin önceki sayfaları asıl yayıncısına aittir ve içeriği değiştirilmemiştir; en güncel sürüm için belgenin yayıncısına başvurun.