ZXCT1010

ENHANCED HIGH-SIDE CURRENT MONITOR

Description

The ZXCT1010 is a high side current sense monitor. Using this device eliminates the need to disrupt the ground plane when sensing a load current.

It is an enhanced version of the ZXCT1009 offering reduced typical output offset and improved accuracy at low sense voltage.

The wide input voltage range of 20V down to as low as 2.5V make it suitable for a range of applications. A minimum operating current of just 4µA, combined with its SOT25 package make suitable for portable battery equipment.

Features

- Low cost, accurate high-side current sensing
- Output voltage scaling
- Up to 2.5V sense voltage
- 2.5V to 20V supply voltage range
- 300nA typical offset current
- 3.5µA quiescent current
- 1% typical accuracy
- SOT25 package
- **Totally Lead-Free & Fully RoHS Compliant(Note 1 & 2)**
- **Halogen and Antimony Free. "Green" Device(Note 3)**

Pin Assignments

SOT25
Package Suffix - E5

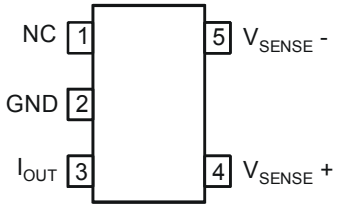

Top View

Applications

- Battery chargers
- Smart battery packs
- DC motor control
- Over current monitor
- Power management
- Programmable current source

Notes:
1. No purposely added lead. Fully EU Directive 2002/95/EC (RoHS) & 2011/65/EU (RoHS 2) compliant.
2. See http://www.diodes.com/quality/lead_free.html for more information about Diodes Incorporated's definitions of Halogen- and Antimony-free, "Green" and Lead-free.
3. Halogen- and Antimony-free "Green" products are defined as those which contain <900ppm bromine, <900ppm chlorine (<1500ppm total Br + Cl) and <1000ppm antimony compounds.

Typical Applications Circuit

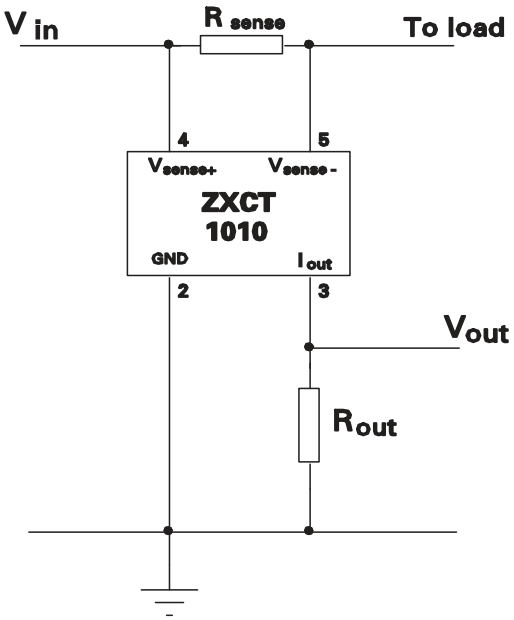

© Diodes Incorporated

Pin Descriptions

Pin Number	Pin Name	Function
1	NC	No connection
2	GND	Ground
3	I_{OUT}	Output current, proportional to V_{IN} - V_{LOAD}
4	V_{SENSE-}	Supply voltage
5	V_{SENSE+}	Connection to load/battery

Functional Block Diagram

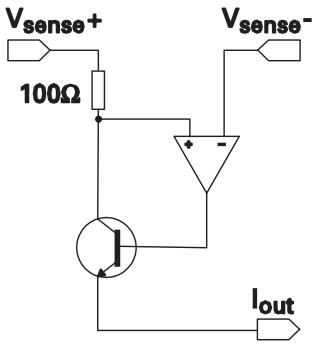

Absolute Maximum Ratings (@T_A = +25°C, unless otherwise specified.)

Parameter		Rating	Unit
Voltage on any pin (relative to I_{OUT})		-0.6 to +20	V
Continuous output current, I_{OUT}		25	mA
Continuous sense voltage, V_{SENSE} (Note 4)		-0.5 to +0.5	V
Operating temperature, T_A		-40 to +85	°C
Storage temperature		-55 to +125	°C
Package power dissipation(@T_A = +25°C)	SOT25	300	mW

Note: 4. Operation above the absolute maximum rating may cause device failure. Operation at absolute maximum ratings, for extended periods, may reduce device reliability

Electrical Characteristics (@T_A = +25°C, unless otherwise specified.)

Symbol	Parameter	Conditions	Limits			Units
			Min	Typ	Max	
V_{IN}	V_{CC} range	–	2.5	–	20	V
I_{OUT}	Output Current (Note 5)	V_{SENSE} = 0V	0	0.3	10	µA
		V_{SENSE} = 10mV	85	100	115	
		V_{SENSE} = 100mV	0.975	1.0	1.025	mA
		V_{SENSE} = 200mV	1.95	2.0	2.05	
		V_{SENSE} = 1V	9.7	10.0	10.3	
Iq	Ground pin current	V_{SENSE} = 0V	—	3.5	8	µA
V_{SENSE}	Sense Voltage (Note 6)		0	—	2500	mV
I_{SENSE-}	V_{SENSE-} Input Current	–	—	—	100	nA
A_{CC}	Accuracy	R_{SENSE} = 0.1Ω; V_{SENSE} = 200mV	-2.5	—	2.5	%
G_M	Transconductance, I_{OUT}/V_{SENSE}	–	—	10000	—	µA/V
BW	Bandwidth	$V_{SENSE(DC)}$ = 10mV, RF P_{IN} = -40dBm (Note 7)	—	300	—	kHz
		$V_{SENSE(DC)}$ = 100mV, RF P_{IN} = -20dBm (Note 7)	—	2	—	MHz

Notes: 5. Include input offset voltage contribution
6. V_{SENSE} is defined as the differential voltage between V_{SENSE+} and V_{SENSE-}, V_{SENSE} = V_{SENSE+} -V_{SENSE-} =V_{IN}-V_{LOAD} = I_{LOAD} * R_{SENSE}
7. -20dBm = 63mV_{P-P} into 50Ω

© Diodes Incorporated

Typical Performance Characteristics

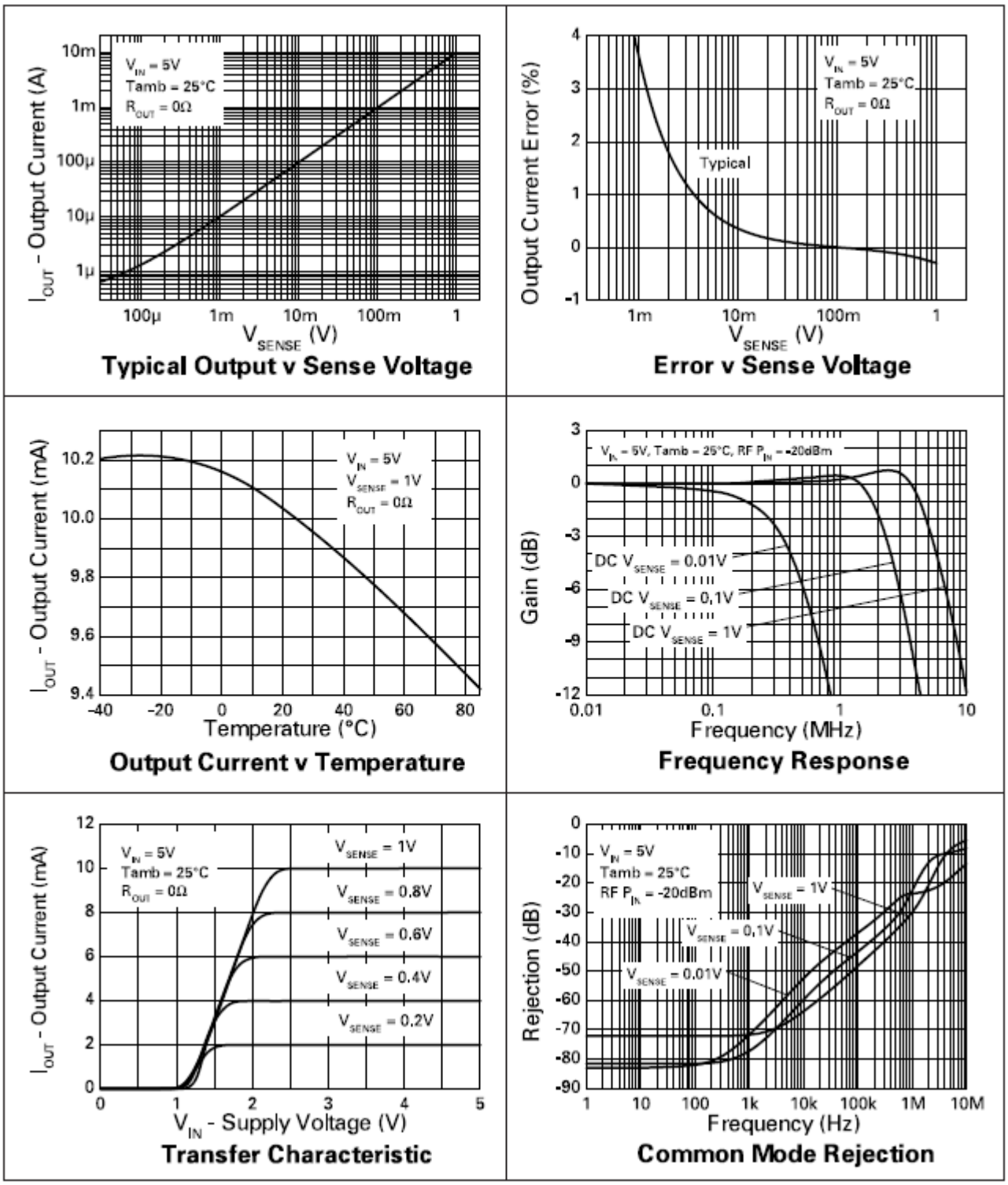

© Diodes Incorporated

Power Dissipation

The maximum allowable power dissipation of the device for normal operation (P_{MAX}), is a function of the package junction temperature ($T_{J(MAX)}$), and ambient temperature (T_{AMB}), according to the expression.

$P_{MAX} = (T_{J(MAX)} – T_{AMB})/\theta_{JA}$

The device power dissipation, PD is given by the expression:

$P_D = I_{OUT}*(V_{IN} – V_{OUT})$ Watts

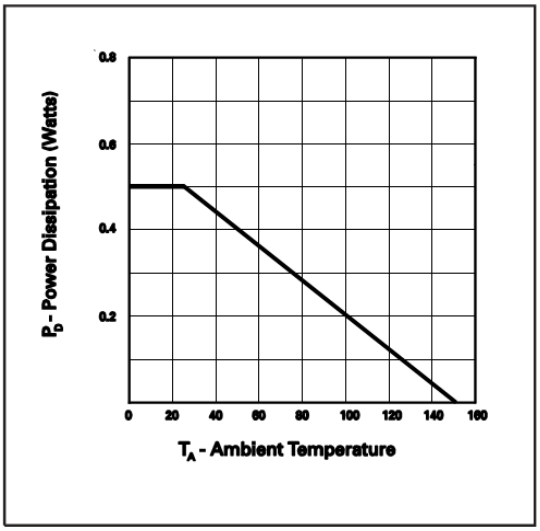

Application Information

The following lines describes how to scale a load current to an output voltage.

$V_{SENSE} = V_{IN} – V_{LOAD}$

$V_{OUT} = 0.01 \times V_{SENSE} \times R_{OUT}$

E.g.

A 1.0A current is to be represented by a 100mV output voltage:

1) Choose the value of R_{SENSE} to give 50mV > V_{SENSE} > 500mV at full load.

For example, V_{SENSE} = 100mV at 1.0A. R_{SENSE} = 0.1/1.0 = > 0.1ohms.

2) Choose R_{OUT} to give V_{OUT} = 100mV, when V_{SENSE} = 100mV.

Rearranging for R_{out} gives:
$R_{OUT} = V_{OUT}/(V_{SENSE} \times 0.01)$

$R_{OUT} = 0.1/(0.1 \times 0.01) = 100\Omega$

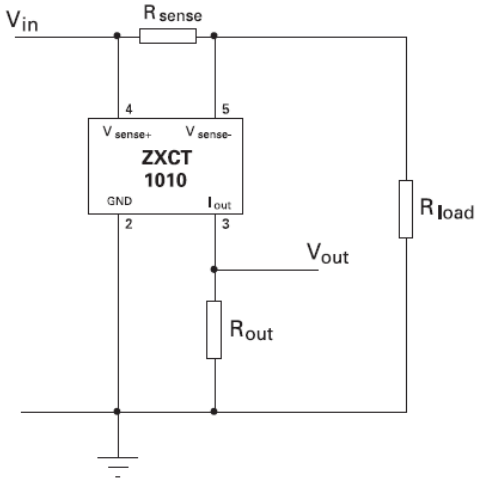

Typical Application Circuit

Typical Circuit Application:

When R_{LOAD} represented any load including DC motors, a charging battery or further circuitry that requires monitoring, R_{SENSE} can be selected on specific requirements of accuracy, size and power rating.

© Diodes Incorporated

Application Information (cont.)

Li-ion Charger Circuit:

The figure below shows the ZXCT1010 supporting the Benchmarq bq2954 Charge Management IC. Most of the support components for the bq2954 are omitted for clarity. This design also uses the Zetex FZT789A high current Super-b PNP as the switching transistor in the DC-DC step down converter and the FMMT451 as the drive NPN for the FZT789A. The circuit can be configured to charge up to four Li-ion cells at a charge current of 1.25A. Charge can be terminated on maximum voltage, selectable minimum current, or maximum time out, switching frequency of the PWM loop is approximately 120kHz.

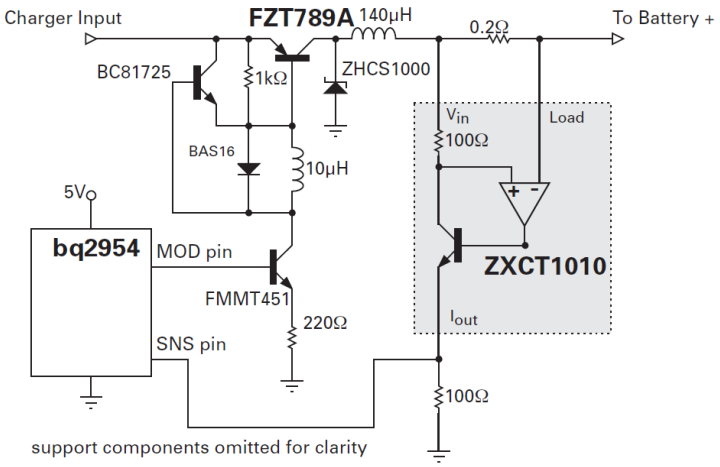

Bi-Directional Current Sensing:

The ZXCT1010 can be used to measure current bi-directionally, if two devices are connected as show below:

If the voltage V1 is positive with respect to the voltage V2 the lower device will be active, delivering a proportional output current to R_{out}. Due to the polarity of the voltage across R_{SENSE}, the upper device will be inactive and will not contribute to the current delivered to R_{out}. When V2 is more positive than V1, current will be flowing in the opposite direction, causing the upper device to be active instead.

Non-linearity will be apparent at small values of VSENSE due to offset current contribution. Devices can use separate output resistors if the current direction is to be monitored independently.

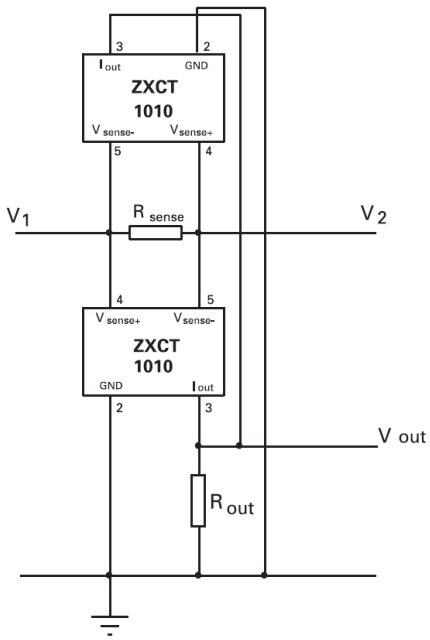

© Diodes Incorporated

Application Information (cont.)

Bi-Directional Transfer Function:

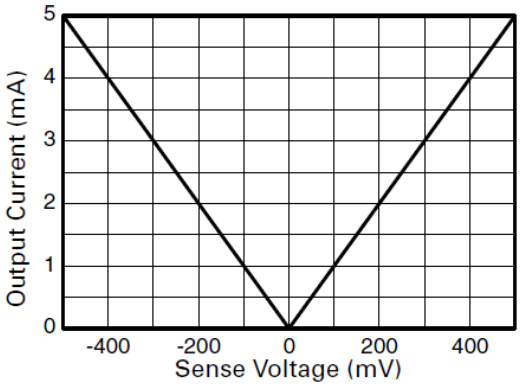

Output Current v Sense Voltage

PCB Trace Shunt Resistor for Low Cost Solution:

The figure below shows output characteristics of the device when using a PCB resistive trace for a low cost solution in replacement for a conventional shunt resistor. The graph shows the linear rise in voltage across the resistor due to the PTC of the material and demonstrates how this rise in resistance value over temperature compensates for the NTC of the device.

The figure opposite shows a PCB layout suggestion. The resistor section is 25mm x 0.25mm giving approximately 150mΩ using 1oz copper. The data for the normalized graph was obtained using a 1A load current and a 100Ω output resistor. An electronic version of the PCB layout is available by request.

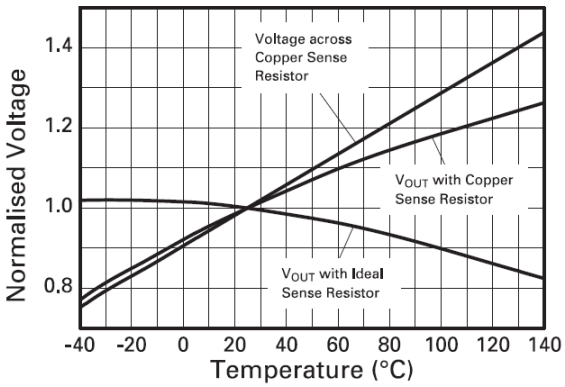

Effect of Sense Resistor Material on Temperature Performance

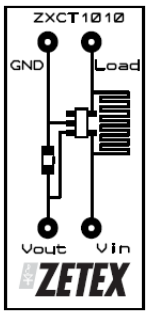

Actual Size

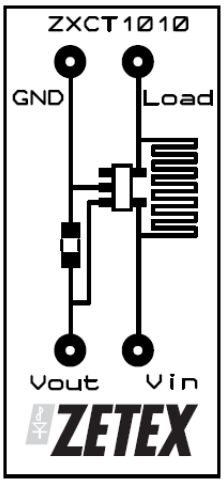

Layout shows area of shunt resistor compared to SOT23-5 package. Not actual size

© Diodes Incorporated

Ordering Information

Part Number	Reel Size	Tape Width	Quantity per Reel	Part Marking	Package
ZXCT1010E5TA	7"	8mm	3000 Units	101	SOT25

Note: 8. Pad layout as shown on Diodes Inc. suggested pad layout document AP02001, which can be found on our website at http://www.diodes.com/datasheets/ap02001.pdf

Package Outline Dimensions (All dimensions in mm.)

Please see AP02002 at http://www.diodes.com/datasheets/ap02002.pdf for latest version.

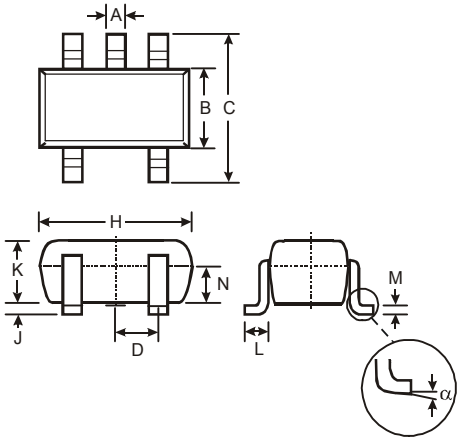

SOT25			
Dim	Min	Max	Typ
A	0.35	0.50	0.38
B	1.50	1.70	1.60
C	2.70	3.00	2.80
D	—	—	0.95
H	2.90	3.10	3.00
J	0.013	0.10	0.05
K	1.00	1.30	1.10
L	0.35	0.55	0.40
M	0.10	0.20	0.15
N	0.70	0.80	0.75
α	0°	8°	—
All Dimensions in mm			

Suggested Pad Layout

Please see AP02001 at http://www.diodes.com/datasheets/ap02001.pdf for latest version.

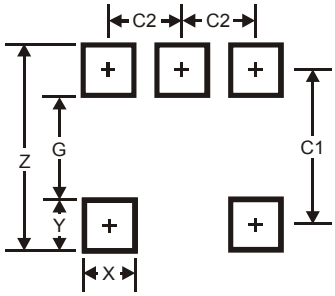

Dimensions	Value (in mm)
Z	3.20
G	1.60
X	0.55
Y	0.80
C1	2.40
C2	0.95

© Diodes Incorporated

IMPORTANT NOTICE

DIODES INCORPORATED MAKES NO WARRANTY OF ANY KIND, EXPRESS OR IMPLIED, WITH REGARDS TO THIS DOCUMENT, INCLUDING, BUT NOT LIMITED TO, THE IMPLIED WARRANTIES OF MERCHANTABILITY AND FITNESS FOR A PARTICULAR PURPOSE (AND THEIR EQUIVALENTS UNDER THE LAWS OF ANY JURISDICTION).

Diodes Incorporated and its subsidiaries reserve the right to make modifications, enhancements, improvements, corrections or other changes without further notice to this document and any product described herein. Diodes Incorporated does not assume any liability arising out of the application or use of this document or any product described herein; neither does Diodes Incorporated convey any license under its patent or trademark rights, nor the rights of others. Any Customer or user of this document or products described herein in such applications shall assume all risks of such use and will agree to hold Diodes Incorporated and all the companies whose products are represented on Diodes Incorporated website, harmless against all damages.

Diodes Incorporated does not warrant or accept any liability whatsoever in respect of any products purchased through unauthorized sales channel. Should Customers purchase or use Diodes Incorporated products for any unintended or unauthorized application, Customers shall indemnify and hold Diodes Incorporated and its representatives harmless against all claims, damages, expenses, and attorney fees arising out of, directly or indirectly, any claim of personal injury or death associated with such unintended or unauthorized application.

Products described herein may be covered by one or more United States, international or foreign patents pending. Product names and markings noted herein may also be covered by one or more United States, international or foreign trademarks.

This document is written in English but may be translated into multiple languages for reference. Only the English version of this document is the final and determinative format released by Diodes Incorporated.

LIFE SUPPORT

Diodes Incorporated products are specifically not authorized for use as critical components in life support devices or systems without the express written approval of the Chief Executive Officer of Diodes Incorporated. As used herein:

A. Life support devices or systems are devices or systems which:

1. are intended to implant into the body, or

2. support or sustain life and whose failure to perform when properly used in accordance with instructions for use provided in the labeling can be reasonably expected to result in significant injury to the user.

B. A critical component is any component in a life support device or system whose failure to perform can be reasonably expected to cause the failure of the life support device or to affect its safety or effectiveness.

Customers represent that they have all necessary expertise in the safety and regulatory ramifications of their life support devices or systems, and acknowledge and agree that they are solely responsible for all legal, regulatory and safety-related requirements concerning their products and any use of Diodes Incorporated products in such safety-critical, life support devices or systems, notwithstanding any devices- or systems-related information or support that may be provided by Diodes Incorporated. Further, Customers must fully indemnify Diodes Incorporated and its representatives against any damages arising out of the use of Diodes Incorporated products in such safety-critical, life support devices or systems.

Copyright © 2014, Diodes Incorporated

www.diodes.com

ENTEGRECİ

Bu belge www.entegreci.com üzerinden sunulmaktadır.

Elektronik komponent tedarikinde Entegreci

Entegreci, Eskişehir merkezli, Türkiye geneline satış yapan bir elektronik komponent mağazasıdır. Entegreler (IC), mikrodenetleyiciler, transistörler, diyotlar, pasif elemanlar, konnektörler, modüller ve geliştirme kartları tek adetten seri üretim adetlerine kadar satılır. Ürün sayfalarında güncel stok durumunu, fiyatı ve datasheet bağlantısını bulabilirsiniz.

Parça koduyla arama

Üretici parça numarasını yazın; stok ve fiyatı hemen görün.

www.entegreci.com

Ürün kategorileri

Entegreden kapasitöre tüm elektronik komponent kategorileri.

Kategorilere göz atın

Üreticiler

Aradığınız üreticinin ürünlerini tek sayfada inceleyin.

Üreticileri görün

Toplu alım ve teklif

Listede olmayan ya da yüksek adetli parçalar için teklif isteyin.

Teklif isteyin

www.entegreci.com | **destek@entegreci.com** | **0850 305 90 34**

Entegreci is an online electronic components store based in Türkiye. Search by manufacturer part number to see stock, prices and datasheets for integrated circuits, microcontrollers, transistors, passive components and connectors, or request a quote for parts that are not listed.

Bu sayfa Entegreci tarafından eklenmiştir. Belgenin önceki sayfaları asıl yayıncısına aittir ve içeriği değiştirilmemiştir; en güncel sürüm için belgenin yayıncısına başvurun.