AUTOMOTIVE GRADE MICROPOWER CURRENT MONITOR

Description

The ZXCT1009Q is a micropower high side current sense monitor.

This device eliminates the need to disrupt the ground plane when sensing a load current.

It takes a high side voltage developed across a current shunt resistor and translates it into a proportional output current. A user defined output resistor scales the output current into a ground-referenced voltage.

The wide input voltage range of 20V down to as low as 2.5V make it suitable for a range of applications. A minimum operating current of just 4µA, combined with a SOT23 package make it a unique solution for portable battery equipment.

The ZXCT1009Q has been qualified to AEC-Q100 Grade 3 and is Automotive Grade supporting PPAPs.

Pin Assignments

SOT23

Package Suffix - F

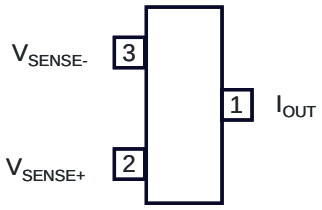

(Top View)

Features

- Low cost, accurate high-side current sensing
- Output voltage scaling
- Up to 2.5V sense voltage
- 2.5V to 20V supply range
- 4µA quiescent current
- 1% typical accuracy
- SOT23
  - **Totally Lead-Free & Fully RoHS Compliant (Notes 1 & 2)**
  - **Halogen and Antimony Free. "Green" Device (Note 3)**
- Automotive Grade
  - **Qualified to AEC-Q100 Standards for High Reliability**
  - **PPAP Capable (Note 4)**

Applications

- Automotive Current Measurement
- Automotive DC Motor Stall Detection
- Over Current Monitor

Notes:
1. No purposely added lead. Fully EU Directive 2002/95/EC (RoHS) & 2011/65/EU (RoHS 2) compliant.
2. See http://www.diodes.com/quality/lead_free.html for more information about Diodes Incorporated's definitions of Halogen- and Antimony-free, "Green" and Lead-free.
3. Halogen- and Antimony-free "Green" products are defined as those which contain <900ppm bromine, <900ppm chlorine (<1500ppm total Br + Cl) and <1000ppm antimony compounds.
4. Automotive products are AEC-Q100 qualified and are PPAP capable. Automotive, AEC-Q100 and standard products are electrically and thermally the same, except where specified. For more information, please refer to http://www.diodes.com/quality/product_compliance_definitions/.

Typical Application Circuit

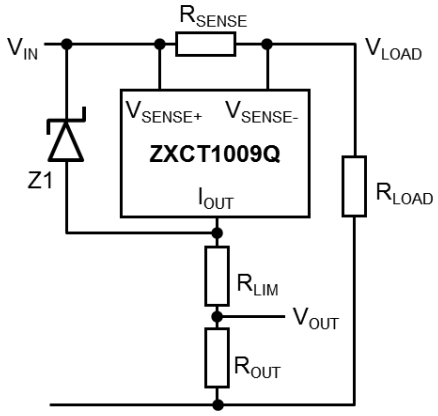

© Diodes Incorporated

Pin Descriptions

Pin Name	Pin Function
V_{SENSE+}	Connection to supply voltage
V_{SENSE-}	Connection to load
I_{OUT}	Output current, proportional to measured current

Functional Block Diagram

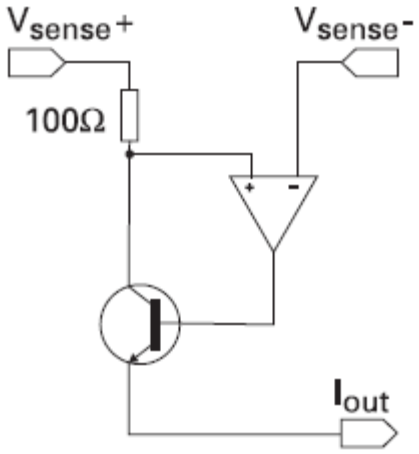

Absolute Maximum Ratings (@T_A = +25°C, unless otherwise specified.)

Description		Rating	Unit
Voltage on any pin (relative to I_{OUT})		-0.6 to 20	V
Continous output current, I_{OUT}		25	mA
Continuous sense voltage, V_{SENSE} (Note 5)		-0.5 to +5	V
Operating temperature, T_A		-40 to +85	°C
Storage temperature		-55 to +125	°C
ESD Susceptibility			
HBM	Human Body Model	2	kV
MM	Machine Model	300	V
CDM	Charged Device Model	1	kV

Caution: Stresses greater than the 'Absolute Maximum Ratings' specified above, may cause permanent damage to the device. These are stress ratings only; functional operation of the device at these or any other conditions exceeding those indicated in this specification is not implied. Device reliability may be affected by exposure to absolute maximum rating conditions for extended periods of time.

Semiconductor devices are ESD sensitive and may be damaged by exposure to ESD events. Suitable ESD precautions should be taken when handling and transporting these devices.

Package Thermal Data

Package	θ_{JA}	P_{DIS} T_A = +25°C, T_J = +150°C
SOT23	280°C/W	450mW

© Diodes Incorporated

Electrical Characteristics (@T_A = +25°C, VIN = 5V, R_{OUT} = 100Ω, unless otherwise specified.)

Symbol	Parameter	Conditions	Limits			Units
			Min	Typ	Max	
V_{IN}	V_{CC} range		2.5		20	V
I_{OUT}	Output Current (Note 6)	V_{SENSE} = 0V (Note 5) V_{SENSE} = 10mV V_{SENSE} = 100mV V_{SENSE} = 200mV V_{SENSE} = 1V	1 90 0.975 1.95 9.6	4 104 1.002 2.0 9.98	15 120 1.025 2.05 10.2	µA µA mA mA mA
V_{SENSE}	Sense Voltage (Note 5)		0		2500	mV
I_{SENSE-}	V_{SENSE-} Input Current				100	nA
A_{CC}	Accuracy	R_{SENSE} = 0.1Ω V_{SENSE} = 200mV	-2.5		2.5	%
G_M	Transconductance, I_{OUT}/V_{SENSE}			10000		µA/V
BW	Bandwidth	$V_{SENSE(DC)}$ = 10mv, RF P_{IN} = -40dBm (Note 7) $V_{SENSE(DC)}$ = 100mv, RF P_{IN} = -20dBm‡		300 2		kHz MHz

Notes: 5. V_{SENSE} is defined as the differential voltage between V_{SENSE+} and V_{SENSE-} pins.

V_{SENSE} = V_{SENSE+} - V_{SENSE-}
= V_{IN} - V_{LOAD}
= I_{LOAD} x R_{SENSE}

6. Includes input offset voltage contribution
7. -20dBm = 63mV_{PP} into 50Ω.

Power Dissipation

The maximum allowable power dissipation of the device for normal operation (P_{MAX}), is a function of the package junction to ambient thermal resistance (θ_{JA}), maximum junction temperature (T_{JMAX}), and ambient temperature (T_{AMB}), according to the expression:

$P_{MAX} = (T_{JMAX} – T_{AMB}) / \theta_{JA}$

The device power dissipation, P_D is given by the expression:

$P_D = I_{OUT}$ x (V_{IN} -V_{OUT}) W

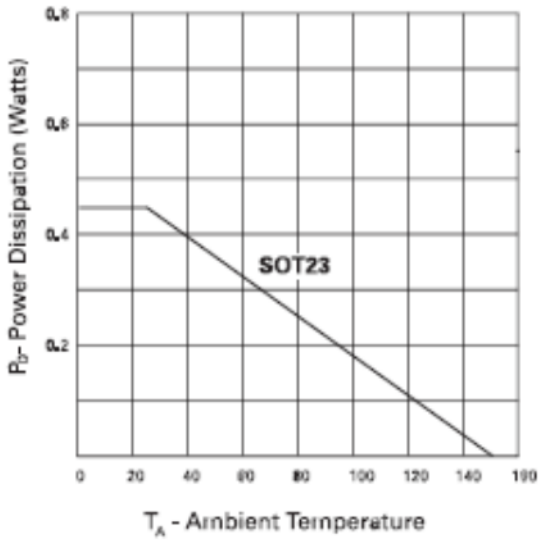

© Diodes Incorporated

Typical Characteristics

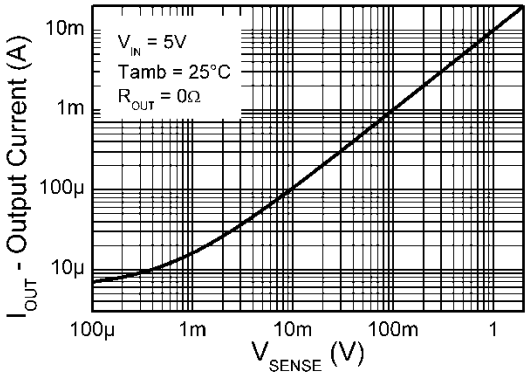

Typical Output v Sense Voltage

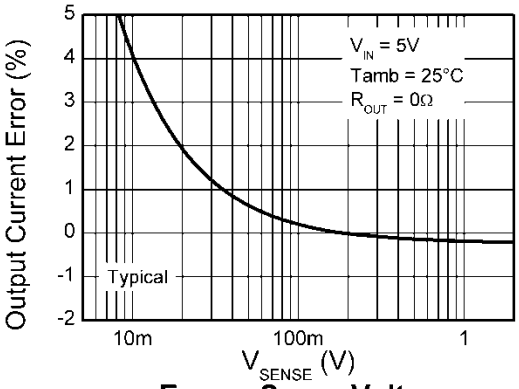

Error v Sense Voltage

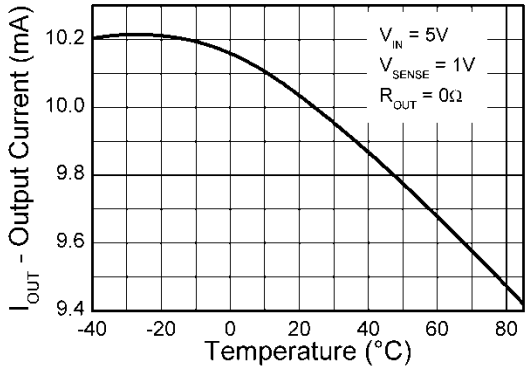

Output Current v Temperature

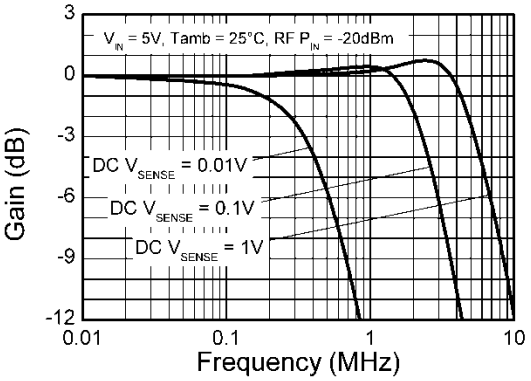

Frequency Response

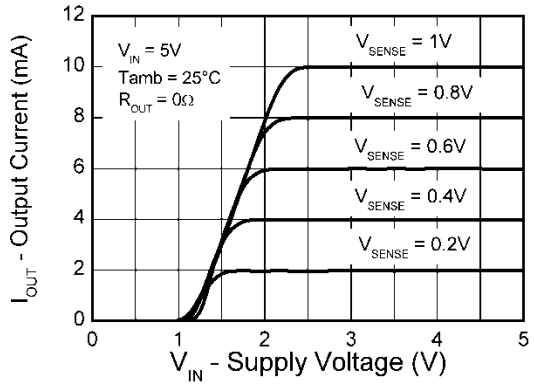

Transfer Characteristic

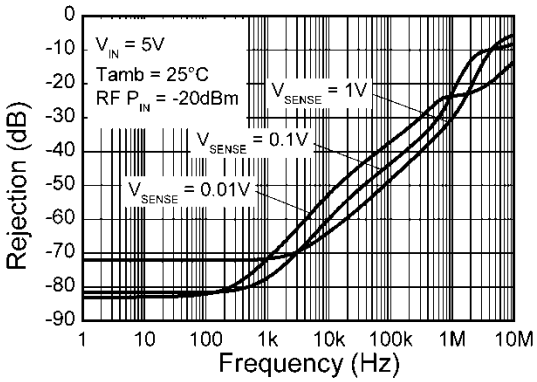

Common Mode Rejection

© Diodes Incorporated

Typical Characteristics (cont.)

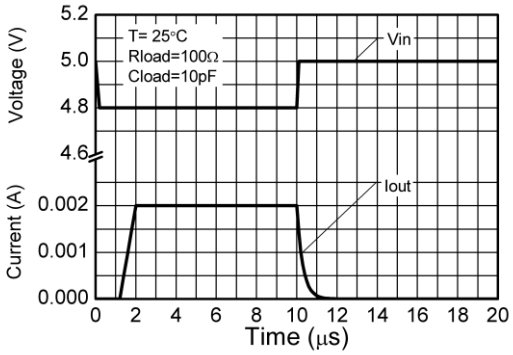

Step Response

Application Information

Referring to Figure 1, where R_{LOAD} represents any load including DC motors, a charging battery or further circuitry that requires monitoring, R_{SENSE} can be selected on specific requirements of accuracy, size and power rating.

The following text describes how to scale a load current to an output voltage.

Referring to Figure 1.

$$V_{SENSE} = V_{IN} - V_{LOAD}$$
$$= R_{SENSE} \times I_{LOAD} \quad (1)$$

$$I_{OUT} = V_{SENSE} \times 10mA/V \quad (2)$$

$$V_{OUT} = I_{OUT} \times R_{OUT} \quad (3)$$

Combining (2) and (3) V_{OUT} can be determined to be:

$$V_{OUT} = 0.01 \times V_{SENSE} \times R_{OUT} \quad (4)$$

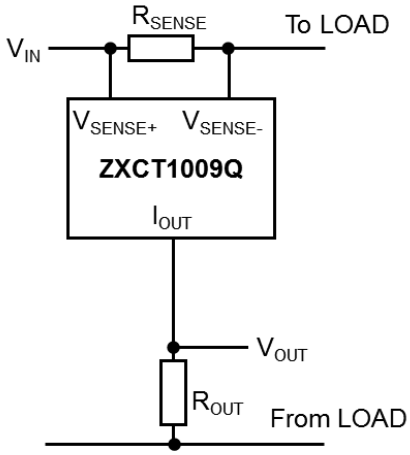

Figure 1: ZXCT1009Q typical circuit

Example:

A 1A current is to be represented by a 1V output voltage:

1) Choose the value of R_{SENSE} to give 50mV > V_{SENSE} > 500mV at full load.

   For example set V_{SENSE} = 100mV at 1.0A.

   Rearranging (1) gives:

$$R_{SENSE} = \frac{V_{SENSE}}{I_{LOAD}}$$
$$= 0.1/1.0 = 0.1\Omega.$$

2) Choose R_{OUT} to give V_{OUT} = 1V, when V_{SENSE} = 100mV.

   Rearranging (4) for R_{OUT} gives:

$$R_{OUT} = \frac{V_{OUT}}{V_{SENSE} \times 0.001}$$
$$= \frac{1}{0.1 \times 0.01} = 1k\Omega$$

© Diodes Incorporated

Application Information (cont.)

Transient Protection

An additional resistor, R_{LIM} can be added in series with R_{OUT} (Figure 2), to limit the current from I_{OUT}. Any circuit connected to V_{OUT} will be protected from input voltage transients.

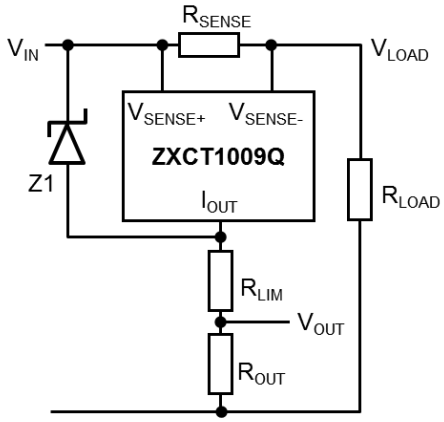

Figure 2 ZXCT1009Q with Additional Current Limiting Resistor R_{LIM} and Zener Z1.

This can be of particular use in automotive applications where load dump and other common transients need to be considered. Adding a Zener diode Z1 provides additional protection for local dump, reverse battery and high voltage transient incidents.

Assuming the worst case condition of V_{OUT} = 0V; providing a low impedance to a transient, the minimum value of R_{LIM} is given by:

$$R_{LIM(min)} = (V_{PK} - V_{MAX})/ I_{PK}$$

Where:

V_{PK} = Peak transient voltage to be withstood

V_{MAX} = Maximum working voltage = 20V

I_{PK} = Peak output current = 40mA

The maximum value of R_{LIM} is set by $V_{IN(MIN)}$, $V_{OUT(MAX)}$ and the dropout voltage (see transfer characteristic on page 3) of the ZXCT1009Q:

$$R_{(LIM(MAX))} = \frac{R_{OUT} \times [V_{IN(MIN)} - \{V_{DP} + V_{OUT(MAX)}\}]}{V_{OUT(MAX)}}$$

Where:

$V_{IN(MIN)}$ = Minimum Supply Operating Voltage

V_{DP} = Dropout Voltage

$V_{OUT(MAX)}$ = Maximum Operating Output Voltage

PCB Trace Shunt Resistor for Low Cost Solution

The figure below shows output characteristics of the device when using a PCB resistive trace for a low cost solution in replacement for a conventional shunt resistor. The graph shows the linear rise in voltage across the resistor due to the PTC of the material and demonstrates how this rise in resistance value over temperature compensates for the NTC of the device.

The figure opposite shows a PCB layout suggestion. The resistor section is 25mm x 0.25mm giving approximately 150mΩ using 1oz copper.

The data for the normalized graph was obtained using a 1A load current and a 100Ω output resistor. An electronic version of the PCB layout is available through Diodes applications group.

© Diodes Incorporated

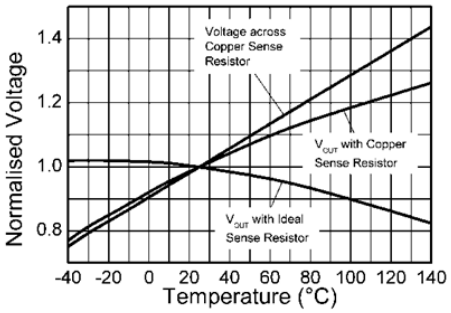

Effect of Sense Resistor Material on Temperature Performance

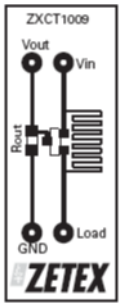

Layout shows area of shunt resistor compared to SOT23 package. Not actual size.

Ordering Information

ZXCT1009Q X XX

Qualification	Package	Packing
Q : Automotive Grade	F : SOT23	TA : 7" Tape & Reel

Device	Packaging (Note 8)	Package Code	Identification Code	Packing: 7" Tape and Reel			Qualification Grade (Note 9)
				Quantity	Tape Width	Part Number Suffix	
ZXCT1009QFTA	SOT23	F	109	3000 Units	8mm	7"	Grade 3

Note: 8. Pad layout as shown on Diodes Inc. suggested pad layout document AP02001, which can be found on our website at http://www.diodes.com/datasheets/ap02001.pdf
9. ZXCT1009Q has been qualified to AEC-Q100 grade 3 and is classified as "Automotive Grade" which supports PPAP documentation. See ZXCT1009 datasheet for commercial qualified version.

Marking Information

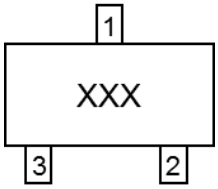

XXX : Identification code : 109

Package Outline Dimensions (All Dimensions in mm)

Please see AP02001 at http://www.diodes.com/datasheets/ap02002.pdf for latest version

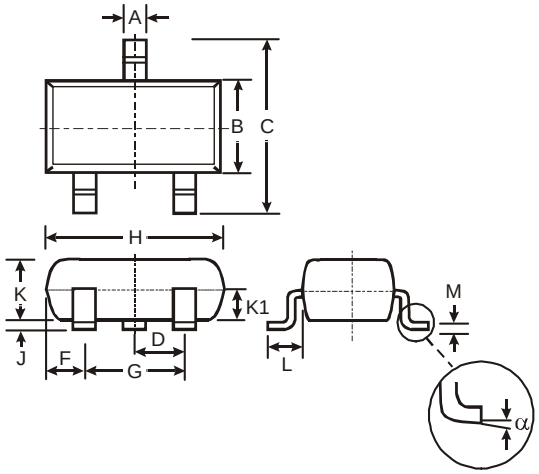

SOT23			
Dim	Min	Max	Typ
A	0.37	0.51	0.40
B	1.20	1.40	1.30
C	2.30	2.50	2.40
D	0.89	1.03	0.915
F	0.45	0.60	0.535
G	1.78	2.05	1.83
H	2.80	3.00	2.90
J	0.013	0.10	0.05
K	0.903	1.10	1.00
K1	-	-	0.400
L	0.45	0.61	0.55
M	0.085	0.18	0.11
α	0°	8°	-
All Dimensions in mm			

© Diodes Incorporated

Suggested Pad Layout

Please see AP02001 at http://www.diodes.com/datasheets/ap02001.pdf for latest version.

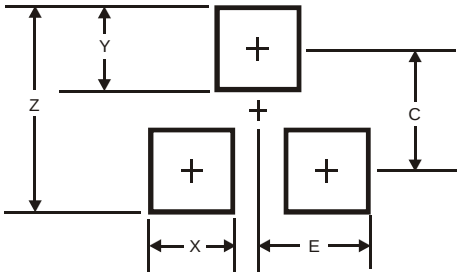

Dimensions	Value (in mm)
Z	2.9
X	0.8
Y	0.9
C	2.0
E	1.35

IMPORTANT NOTICE

DIODES INCORPORATED MAKES NO WARRANTY OF ANY KIND, EXPRESS OR IMPLIED, WITH REGARDS TO THIS DOCUMENT, INCLUDING, BUT NOT LIMITED TO, THE IMPLIED WARRANTIES OF MERCHANTABILITY AND FITNESS FOR A PARTICULAR PURPOSE (AND THEIR EQUIVALENTS UNDER THE LAWS OF ANY JURISDICTION).

Diodes Incorporated and its subsidiaries reserve the right to make modifications, enhancements, improvements, corrections or other changes without further notice to this document and any product described herein. Diodes Incorporated does not assume any liability arising out of the application or use of this document or any product described herein; neither does Diodes Incorporated convey any license under its patent or trademark rights, nor the rights of others. Any Customer or user of this document or products described herein in such applications shall assume all risks of such use and will agree to hold Diodes Incorporated and all the companies whose products are represented on Diodes Incorporated website, harmless against all damages.

Diodes Incorporated does not warrant or accept any liability whatsoever in respect of any products purchased through unauthorized sales channel.
Should Customers purchase or use Diodes Incorporated products for any unintended or unauthorized application, Customers shall indemnify and hold Diodes Incorporated and its representatives harmless against all claims, damages, expenses, and attorney fees arising out of, directly or indirectly, any claim of personal injury or death associated with such unintended or unauthorized application.

Products described herein may be covered by one or more United States, international or foreign patents pending. Product names and markings noted herein may also be covered by one or more United States, international or foreign trademarks.

This document is written in English but may be translated into multiple languages for reference. Only the English version of this document is the final and determinative format released by Diodes Incorporated.

LIFE SUPPORT

Diodes Incorporated products are specifically not authorized for use as critical components in life support devices or systems without the express written approval of the Chief Executive Officer of Diodes Incorporated. As used herein:

A. Life support devices or systems are devices or systems which:

1. are intended to implant into the body, or

2. support or sustain life and whose failure to perform when properly used in accordance with instructions for use provided in the labeling can be reasonably expected to result in significant injury to the user.

B. A critical component is any component in a life support device or system whose failure to perform can be reasonably expected to cause the failure of the life support device or to affect its safety or effectiveness.

Customers represent that they have all necessary expertise in the safety and regulatory ramifications of their life support devices or systems, and acknowledge and agree that they are solely responsible for all legal, regulatory and safety-related requirements concerning their products and any use of Diodes Incorporated products in such safety-critical, life support devices or systems, notwithstanding any devices- or systems-related information or support that may be provided by Diodes Incorporated. Further, Customers must fully indemnify Diodes Incorporated and its representatives against any damages arising out of the use of Diodes Incorporated products in such safety-critical, life support devices or systems.

Copyright © 2014, Diodes Incorporated

www.diodes.com

ENTEGRECİ

Bu belge www.entegreci.com üzerinden sunulmaktadır.

Elektronik komponent tedarikinde Entegreci

Entegreci, Eskişehir merkezli, Türkiye geneline satış yapan bir elektronik komponent mağazasıdır. Entegreler (IC), mikrodenetleyiciler, transistörler, diyotlar, pasif elemanlar, konnektörler, modüller ve geliştirme kartları tek adetten seri üretim adetlerine kadar satılır. Ürün sayfalarında güncel stok durumunu, fiyatı ve datasheet bağlantısını bulabilirsiniz.

Parça koduyla arama

Üretici parça numarasını yazın; stok ve fiyatı hemen görün.

www.entegreci.com

Ürün kategorileri

Entegreden kapasitöre tüm elektronik komponent kategorileri.

Kategorilere göz atın

Üreticiler

Aradığınız üreticinin ürünlerini tek sayfada inceleyin.

Üreticileri görün

Toplu alım ve teklif

Listede olmayan ya da yüksek adetli parçalar için teklif isteyin.

Teklif isteyin

www.entegreci.com | **destek@entegreci.com** | **0850 305 90 34**

Entegreci is an online electronic components store based in Türkiye. Search by manufacturer part number to see stock, prices and datasheets for integrated circuits, microcontrollers, transistors, passive components and connectors, or request a quote for parts that are not listed.

Bu sayfa Entegreci tarafından eklenmiştir. Belgenin önceki sayfaları asıl yayıncısına aittir ve içeriği değiştirilmemiştir; en güncel sürüm için belgenin yayıncısına başvurun.