AUTOMOTIVE GRADE 20V HIGH-SIDE CURRENT MONITOR

Description

The ZXCT1008Q is a high-side current sense monitor. Using this device eliminates the need to disrupt the ground plane when sensing a load current.

It takes a high-side voltage developed across a current shunt resistor and translates it into a proportional output current. A user defined output resistor scales the output current into a ground-referenced voltage.

The wide input voltage range of 20V down to as low as 2.5V makes it suitable for a range of applications. The ability to withstand high voltage transients and reverse polarity connection makes this part very suitable for automotive and other transient rich environment.

The ZXCT1008Q has been qualified to AEC-Q100 Grade 1 and is Automotive Grade supporting PPAPs.

Features

- Low Cost, Accurate High-Side Current Sensing
- -40 to +125°C Temperature Range
- Up to 500mV Sense Voltage
- 2.5V to 20V Supply Range
- 4µA Quiescent Current
- 1% Typical Accuracy
- SOT23 (Type DN)
- **Totally Lead-Free & Fully RoHS Compliant (Notes 1 & 2)**
- **Halogen and Antimony Free. "Green" Device (Note 3)**
- **The ZXCT1008Q is suitable for automotive applications requiring specific change control; this part is AEC-Q100 qualified, PPAP capable, and manufactured in IATF 16949 certified facilities.**
  https://www.diodes.com/quality/product-definitions/

Applications

- Automotive current measurements
- Automotive DC motor stall detections
- Overcurrent monitors

Pin Assignments

SOT23 (Type DN)

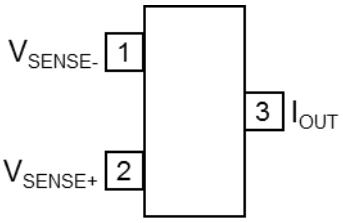

Top View

Application Circuit

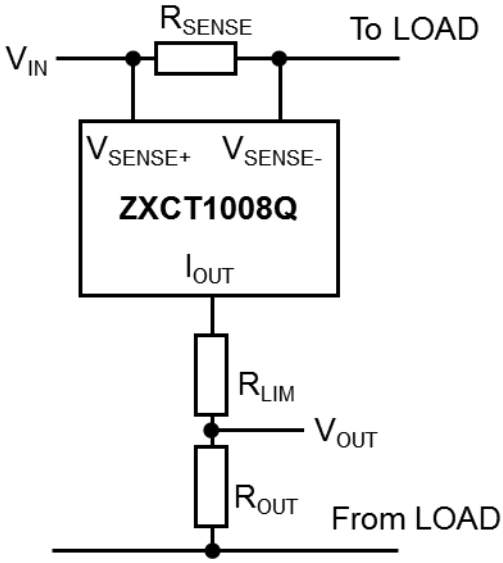

Notes:
1. No purposely added lead. Fully EU Directive 2002/95/EC (RoHS), 2011/65/EU (RoHS 2) & 2015/863/EU (RoHS 3) compliant.
2. See https://www.diodes.com/quality/lead-free/ for more information about Diodes Incorporated's definitions of Halogen- and Antimony-free, "Green" and Lead-free.
3. Halogen- and Antimony-free "Green" products are defined as those which contain <900ppm bromine, <900ppm chlorine (<1500ppm total Br + Cl) and <1000ppm antimony compounds.

© 2024 Copyright Diodes Incorporated. All Rights Reserved.

Pin Descriptions

Pin Name	Pin Function
V_{SENSE+}	Connection to Supply Voltage
V_{SENSE-}	Connection to Load
I_{OUT}	Output Current, Proportional to Measured Current

Functional Block Diagram

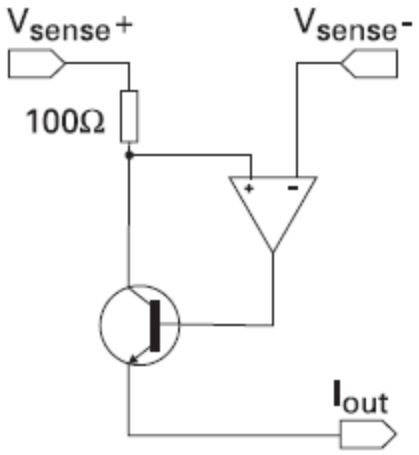

Absolute Maximum Ratings (@T_A = +25°C, unless otherwise specified. Note 4)

Description		Rating	Unit
Voltage on Any Pin (Relative to I_{OUT})		-0.6 to 20	V
Continous Output Current, I_{OUT}		25	mA
Continuous Sense Voltage, V_{SENSE} (Note 5)		-0.5 to 5	V
Operating Temperature, T_A		-40 to +125	°C
Storage Temperature		-55 to +125	°C
Package Power Dissipation @ T_A = +25°C (Derate to Zero @ +125°C)		360	mW
ESD Susceptibility			
HBM	Human Body Model	2	kV
MM	Machine Model	300	V
CDM	Charged Device Model	1	kV

Notes: 4. Stresses greater than those listed under *Absolute Maximum Ratings* can cause permanent damage to the device. These are stress ratings only, and functional operation of the device at these or any other conditions beyond those indicated in this specification is not implied. Exposure to *Absolute Maximum Ratings* for extended periods can affect device reliability.

Semiconductor devices are ESD sensitive and can be damaged by exposure to ESD events. Suitable ESD precautions should be taken when handling and transporting these devices.

5. V_{SENSE} is defined as the differential voltage between V_{SENSE+} and V_{SENSE-} pins.
$V_{SENSE} = V_{SENSE+} - V_{SENSE-}$
$= V_{IN} - V_{LOAD}$
$= I_{LOAD} \times R_{SENSE}$

© 2024 Copyright Diodes Incorporated. All Rights Reserved.

Electrical Characteristics (@T_A = +25°C, V_{IN} = 5V, R_{OUT} = 100Ω, unless otherwise specified.)

Symbol	Parameter	Conditions (Note 5)	Min	Typ	Max	Unit
V_{IN}	V_{CC} Range	—	2.5	—	20	V
I_{OUT}	Output Current (Note 6)	V_{SENSE} = 0V V_{SENSE} = 10mV V_{SENSE} = 100mV V_{SENSE} = 200mV V_{SENSE} = 500mV	1 90 0.975 1.95 4.8	4 104 1.0 2.0 5.0	15 120 1.025 2.05 5.2	µA µA mA mA mA
V_{SENSE}	Sense Voltage (Note 5)	—	0	—	500	mV
I_{SENSE-}	V_{SENSE-} Input Current	—	—	—	100	nA
A_{CC}	Accuracy	R_{SENSE} = 0.1Ω V_{SENSE} = 200mV	-2.5	—	+2.5	%
G_M	Transconductance, I_{OUT}/V_{SENSE}	—	—	10000	—	µA/V
BW	Bandwidth	$V_{SENSE(DC)}$ = 10mv, RF P_{IN} = -40dBm (Note 7) $V_{SENSE(DC)}$ = 100mv, RF P_{IN} = -20dBm	— —	300 2	— —	kHz MHz

Notes: 5. V_{SENSE} is defined as the differential voltage between V_{SENSE+} and V_{SENSE-} pins.
$V_{SENSE} = V_{SENSE+} - V_{SENSE-}$
$= V_{IN} - V_{LOAD}$
$= I_{LOAD} \times R_{SENSE}$

6. Includes input offset voltage contribution.
7. -20dBm = 63mV_{PP} into 50Ω.

Power Dissipation

The maximum allowable power dissipation of the device for normal operation (P_{MAX}), is a function of the package junction to ambient thermal resistance (θ_{JA}), maximum junction temperature (T_{JMAX}), and ambient temperature (T_{AMB}), according to the expression:

$P_{MAX} = (T_{JMAX} – T_{AMB}) / \theta_{JA}$

The device power dissipation, P_D is given by the expression:

$P_D = I_{OUT} \times (V_{IN} - V_{OUT})$ W

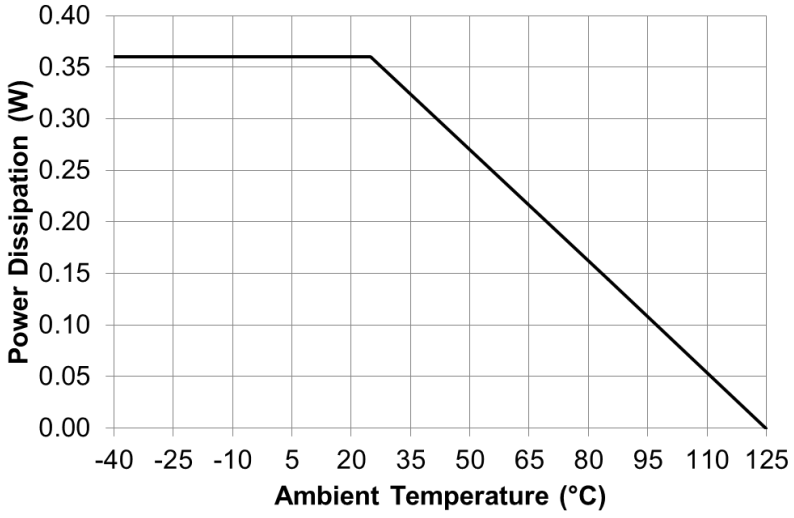

© 2024 Copyright Diodes Incorporated. All Rights Reserved.

Typical Characteristics

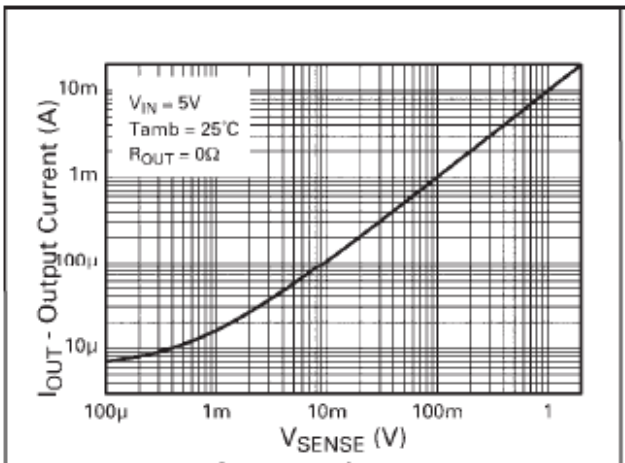

Typical Output v Sense Voltage

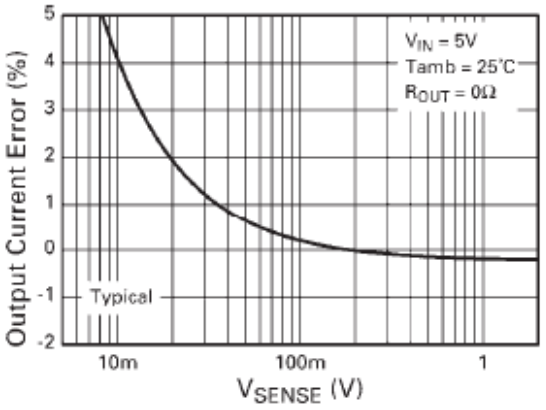

Error v Sense Voltage

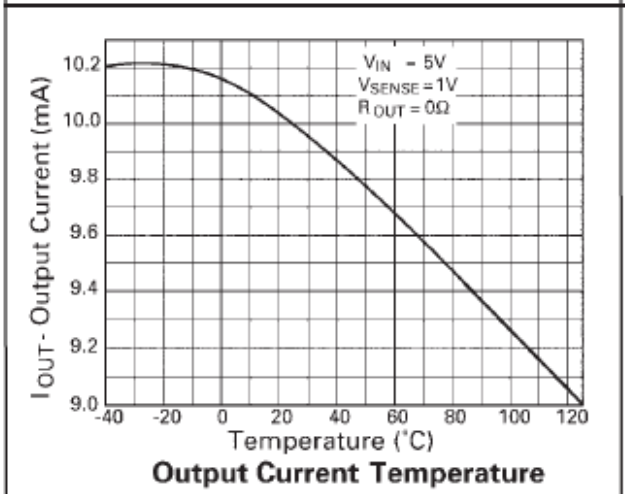

Output Current Temperature

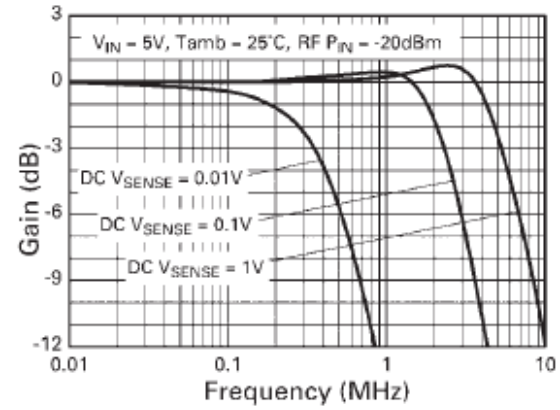

Frequency Response

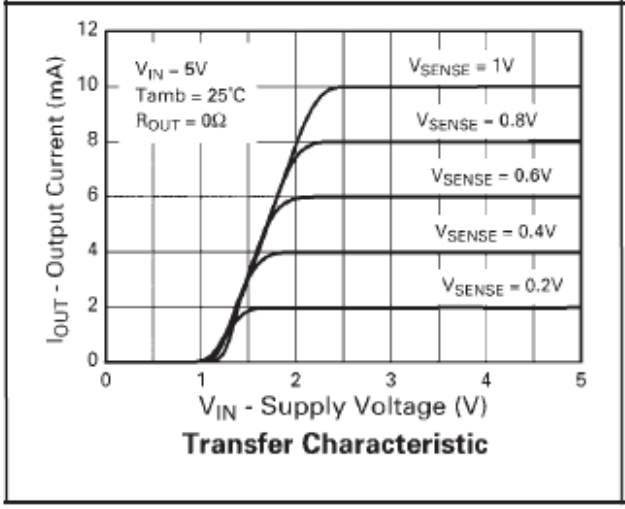

Transfer Characteristic

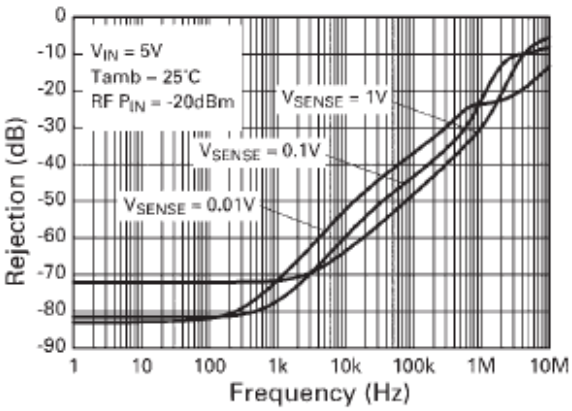

Common Mode Rejection

© 2024 Copyright Diodes Incorporated. All Rights Reserved.

Typical Characteristics (continued)

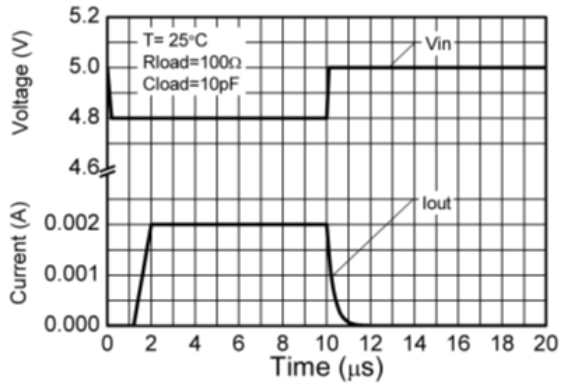

Step Response

Application Information

The following text describes how to scale a load current to an output voltage.

$$V_{SENSE} = V_{IN} - V_{LOAD}$$
$$= R_{SENSE} \times I_{LOAD} \quad (1)$$

$$I_{OUT} = V_{SENSE} \times 10mA/V \quad (2)$$

$$V_{OUT} = I_{OUT} \times R_{OUT} \quad (3)$$

Combining (2) and (3) V_{OUT} can be determined to be:

$$V_{OUT} = 0.01 \times V_{SENSE} \times R_{OUT} \quad (4)$$

Example:

A 1A current is to be represented by a 1V output voltage:

1) Choose the value of R_{SENSE} to give 50mV > V_{SENSE} > 500mV at full load.

   For example set V_{SENSE} = 100mV at 1.0A.

   Rearranging (1) gives:

$$R_{SENSE} = \frac{V_{SENSE}}{I_{LOAD}}$$
$$= 0.1/1.0 = 0.1\Omega.$$

2) Choose R_{OUT} to give V_{OUT} = 1V, when V_{SENSE} = 100mV.

   Rearranging (4) for R_{OUT} gives:

$$R_{OUT} = \frac{V_{OUT}}{V_{SENSE} \times 0.01}$$
$$= \frac{1}{0.1 \times 0.01} = 1k\Omega$$

© 2024 Copyright Diodes Incorporated. All Rights Reserved.

Application Information (continued)

Referring to Figure 1, where R_{LOAD} represents any load including DC motors, a charging battery or further circuitry that requires monitoring, R_{SENSE} can be selected on specific requirements of accuracy, size and power rating.

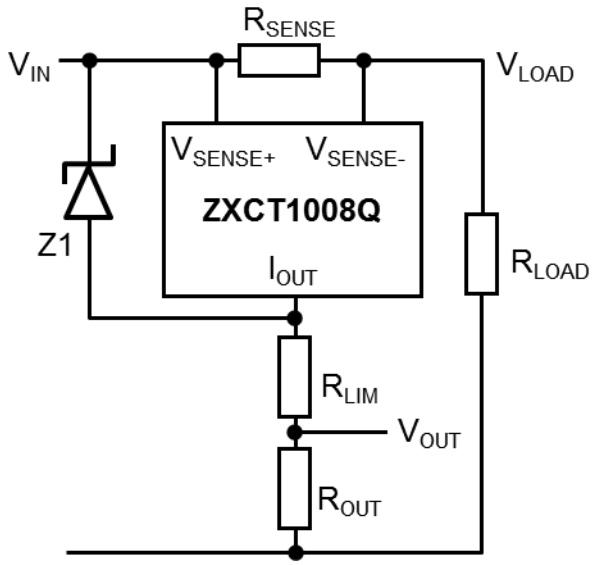

Figure 1. ZXCT1008Q with Additional Current Limiting Resistor R_{LIM} and Zener Z1

An additional resistor, R_{LIM} can be added in series with R_{OUT} (Figure 1), to limit the current from I_{OUT}. Any circuit connected to V_{OUT} will be protected from input voltage transients. This can be of particular use in automotive applications where load dump and other common transients need to be considered. The Zener Z1 provides additional protection for local dump, reverse battery and high-voltage transient incidents.

Assuming the worst case condition of V_{OUT} = 0V; providing a low impedance to a transient, the minimum value of R_{LIM} is given by:

$R_{LIM(min)} = (V_{PK} – V_{MAX})/ I_{PK}$
V_{PK} = Peak transient voltage to be withstood
V_{MAX} = Maximum working voltage = 20V
I_{PK} = Peak output current = 40mA

The maximum value of R_{LIM} is set by $V_{IN(MIN)}$, $V_{OUT(MAX)}$ and the dropout voltage (see transfer characteristic on page 4) of the ZXCT1008Q:

$$R_{(LIM(MAX))} = \frac{R_{OUT} \times [V_{IN(MIN)} - \{V_{DP} + V_{OUT(MAX)}\}]}{V_{OUT(MAX)}}$$

Where:

$V_{IN(MIN)}$ = Minimum Supply Operating Voltage
V_{DP} = Dropout Voltage
$V_{OUT(MAX)}$ = Maximum Operating Output Voltage

© 2024 Copyright Diodes Incorporated. All Rights Reserved.

Application Information (continued)

PCB Trace Shunt Resistor for Low-Cost Solution

The figure below shows output characteristics of the device when using a PCB resistive trace for a low-cost solution in replacement for a conventional shunt resistor. The graph shows the linear rise in voltage across the resistor due to the PTC of the material and demonstrates how this rise in resistance value over temperature compensates for the NTC of the device.

The figure opposite shows a PCB layout suggestion. The resistor section is 25mm x 0.25mm giving approximately 150mΩ using 1oz copper.

The data for the normalized graph was obtained using a 1A load current and a 100Ω output resistor. An electronic version of the PCB layout is available through Diodes Incorporated's applications group.

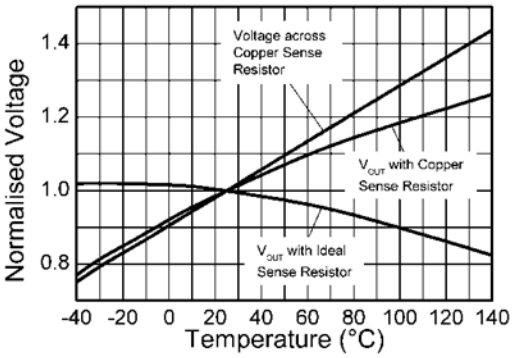

Effect of Sense Resistor Material on Temperature Performance

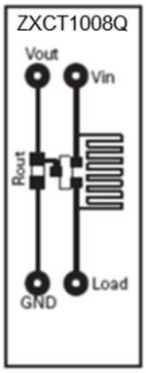

Layout shows area of shunt resistor compared to SOT23 package. Not actual size.

Ordering Information

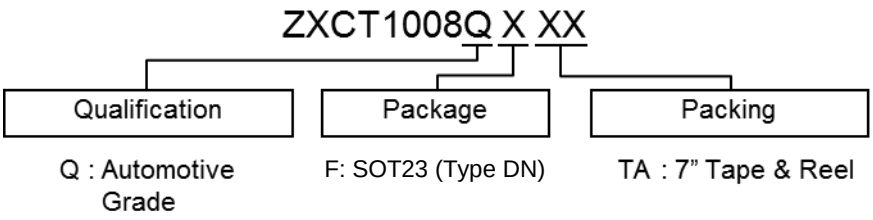

Part Number	Package (Note 8)	Package Code	Identification Code	Qualification Grade (Note 9)	Tape Width (mm)	Packing	
						Qty.	Carrier
ZXCT1008QFTA	SOT23 (Type DN)	F	108	Grade 1	8	3000 Units	7" Tape & Reel

Notes: 8. For packaging details, go to our website at https://www.diodes.com/design/support/packaging/diodes-packaging/.
9. ZXCT1008Q has been qualified to AEC-Q100 grade 1 and is classified as "Automotive Grade" which supports PPAP documentation. See ZXCT1008 datasheet for commercial qualified version.

Marking Information

Package Type: SOT23 (Type DN)

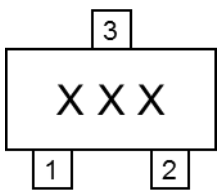

XXX: 108 (Identification Code)

© 2024 Copyright Diodes Incorporated. All Rights Reserved.

Package Outline Dimensions

Please see http://www.diodes.com/package-outlines.html for the latest version.

SOT23 (Type DN)

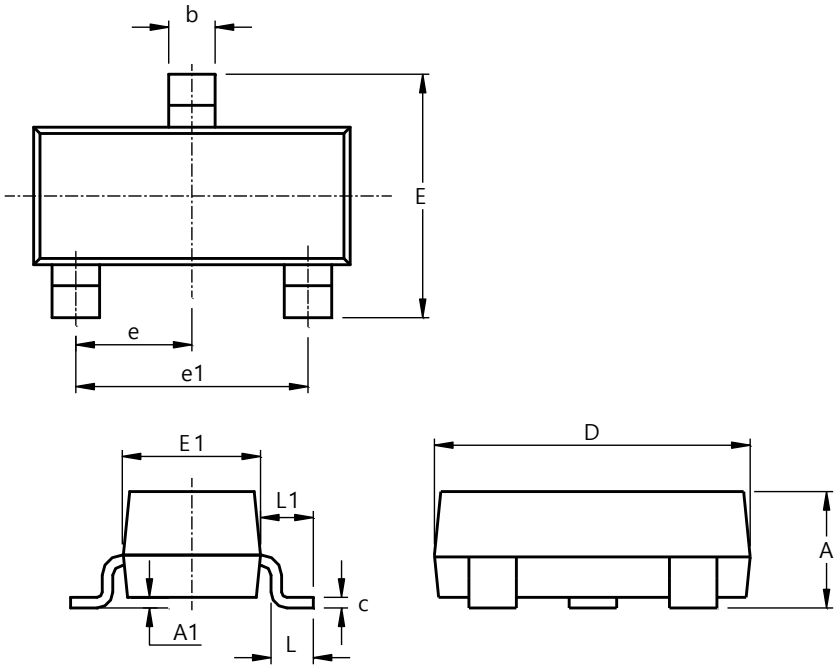

SOT23 Type DN			
Dim	**Min**	**Max**	**Typ**
A	0.89	1.12	1.00
A1	0.01	0.10	0.05
b	0.30	0.51	0.45
c	0.08	0.20	0.10
D	2.80	3.04	3.00
E	2.10	2.64	2.42
E1	1.20	1.40	1.37
e	0.95 REF		
e1	1.90 REF		
L	0.25	0.60	0.30
L1	0.45	0.62	0.54
All Dimensions in mm			

Suggested Pad Layout

Please see http://www.diodes.com/package-outlines.html for the latest version.

SOT23 (Type DN)

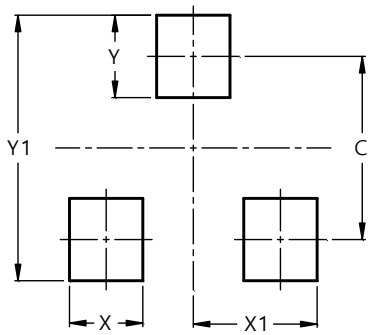

Dimensions	Value (in mm)
C	2.0
X	0.8
X1	1.35
Y	0.9
Y1	2.9

Mechanical Data

- Moisture Sensitivity: Level 1 per J-STD-020
- Terminals: Finish — Matte Tin Plated Leads, Solderable per MIL-STD-202, Method 208 e3
- Weight: 0.009 grams (Approximate)

© 2024 Copyright Diodes Incorporated. All Rights Reserved.

IMPORTANT NOTICE

1. DIODES INCORPORATED (Diodes) AND ITS SUBSIDIARIES MAKE NO WARRANTY OF ANY KIND, EXPRESS OR IMPLIED, WITH REGARDS TO ANY INFORMATION CONTAINED IN THIS DOCUMENT, INCLUDING, BUT NOT LIMITED TO, THE IMPLIED WARRANTIES OF MERCHANTABILITY, FITNESS FOR A PARTICULAR PURPOSE OR NON-INFRINGEMENT OF THIRD PARTY INTELLECTUAL PROPERTY RIGHTS (AND THEIR EQUIVALENTS UNDER THE LAWS OF ANY JURISDICTION).

2. The Information contained herein is for informational purpose only and is provided only to illustrate the operation of Diodes' products described herein and application examples. Diodes does not assume any liability arising out of the application or use of this document or any product described herein. This document is intended for skilled and technically trained engineering customers and users who design with Diodes' products. Diodes' products may be used to facilitate safety-related applications; however, in all instances customers and users are responsible for (a) selecting the appropriate Diodes products for their applications, (b) evaluating the suitability of Diodes' products for their intended applications, (c) ensuring their applications, which incorporate Diodes' products, comply the applicable legal and regulatory requirements as well as safety and functional-safety related standards, and (d) ensuring they design with appropriate safeguards (including testing, validation, quality control techniques, redundancy, malfunction prevention, and appropriate treatment for aging degradation) to minimize the risks associated with their applications.

3. Diodes assumes no liability for any application-related information, support, assistance or feedback that may be provided by Diodes from time to time. Any customer or user of this document or products described herein will assume all risks and liabilities associated with such use, and will hold Diodes and all companies whose products are represented herein or on Diodes' websites, harmless against all damages and liabilities.

4. Products described herein may be covered by one or more United States, international or foreign patents and pending patent applications. Product names and markings noted herein may also be covered by one or more United States, international or foreign trademarks and trademark applications. Diodes does not convey any license under any of its intellectual property rights or the rights of any third parties (including third parties whose products and services may be described in this document or on Diodes' website) under this document.

5. Diodes' products are provided subject to Diodes' Standard Terms and Conditions of Sale (https://www.diodes.com/about/company/terms-and-conditions/terms-and-conditions-of-sales/) or other applicable terms. This document does not alter or expand the applicable warranties provided by Diodes. Diodes does not warrant or accept any liability whatsoever in respect of any products purchased through unauthorized sales channel.

6. Diodes' products and technology may not be used for or incorporated into any products or systems whose manufacture, use or sale is prohibited under any applicable laws and regulations. Should customers or users use Diodes' products in contravention of any applicable laws or regulations, or for any unintended or unauthorized application, customers and users will (a) be solely responsible for any damages, losses or penalties arising in connection therewith or as a result thereof, and (b) indemnify and hold Diodes and its representatives and agents harmless against any and all claims, damages, expenses, and attorney fees arising out of, directly or indirectly, any claim relating to any noncompliance with the applicable laws and regulations, as well as any unintended or unauthorized application.

7. While efforts have been made to ensure the information contained in this document is accurate, complete and current, it may contain technical inaccuracies, omissions and typographical errors. Diodes does not warrant that information contained in this document is error-free and Diodes is under no obligation to update or otherwise correct this information. Notwithstanding the foregoing, Diodes reserves the right to make modifications, enhancements, improvements, corrections or other changes without further notice to this document and any product described herein. This document is written in English but may be translated into multiple languages for reference. Only the English version of this document is the final and determinative format released by Diodes.

8. Any unauthorized copying, modification, distribution, transmission, display or other use of this document (or any portion hereof) is prohibited. Diodes assumes no responsibility for any losses incurred by the customers or users or any third parties arising from any such unauthorized use.

9. This Notice may be periodically updated with the most recent version available at https://www.diodes.com/about/company/terms-and-conditions/important-notice

The Diodes logo is a registered trademark of Diodes Incorporated in the United States and other countries.
All other trademarks are the property of their respective owners.
© 2024 Diodes Incorporated. All Rights Reserved.

www.diodes.com

© 2024 Copyright Diodes Incorporated. All Rights Reserved.

ENTEGRECİ

Bu belge www.entegreci.com üzerinden sunulmaktadır.

Elektronik komponent tedarikinde Entegreci

Entegreci, Eskişehir merkezli, Türkiye geneline satış yapan bir elektronik komponent mağazasıdır. Entegreler (IC), mikrodenetleyiciler, transistörler, diyotlar, pasif elemanlar, konnektörler, modüller ve geliştirme kartları tek adetten seri üretim adetlerine kadar satılır. Ürün sayfalarında güncel stok durumunu, fiyatı ve datasheet bağlantısını bulabilirsiniz.

Parça koduyla arama

Üretici parça numarasını yazın; stok ve fiyatı hemen görün.

www.entegreci.com

Ürün kategorileri

Entegreden kapasitöre tüm elektronik komponent kategorileri.

Kategorilere göz atın

Üreticiler

Aradığınız üreticinin ürünlerini tek sayfada inceleyin.

Üreticileri görün

Toplu alım ve teklif

Listede olmayan ya da yüksek adetli parçalar için teklif isteyin.

Teklif isteyin

www.entegreci.com | **destek@entegreci.com** | **0850 305 90 34**

Entegreci is an online electronic components store based in Türkiye. Search by manufacturer part number to see stock, prices and datasheets for integrated circuits, microcontrollers, transistors, passive components and connectors, or request a quote for parts that are not listed.

Bu sayfa Entegreci tarafından eklenmiştir. Belgenin önceki sayfaları asıl yayıncısına aittir ve içeriği değiştirilmemiştir; en güncel sürüm için belgenin yayıncısına başvurun.