VN4012

N-Channel Enhancement-Mode Vertical DMOS FET

Features

- Free from Secondary Breakdown
- Low Power Drive Requirement
- Ease of Paralleling
- Low C_{ISS} and Fast Switching Speeds
- Excellent Thermal Stability
- Integral Source-Drain Diode
- High Input Impedance and High Gain

Applications

- Motor Controls
- Converters
- Amplifiers
- Switches
- Power Supply Circuits
- Drivers (Relays, Hammers, Solenoids, Lamps, Memories, Displays, Bipolar Transistors, etc.)

General Description

The VN4012 Enhancement-mode (normally-off) transistor uses a vertical DMOS structure and a well-proven silicon-gate manufacturing process. This combination produces a device with the power handling capabilities of bipolar transistors and the high input impedance and positive temperature coefficient inherent in MOS devices. Characteristic of all MOS structures, this device is free from thermal runaway and thermally-induced secondary breakdown.

Microchip's vertical DMOS FETs are ideally suited for a wide range of switching and amplifying applications where very low threshold voltage, high breakdown voltage, high input impedance, low input capacitance, and fast switching speeds are desired.

Package Type

3-lead TO-92
(Top view)

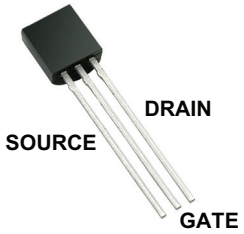

See Table 2-1 for pin information.

© 2021 Microchip Technology Inc.

1.0 ELECTRICAL CHARACTERISTICS

Absolute Maximum Ratings†

Drain-to-Source Voltage ..... BV_{DSS}
Drain-to-Gate Voltage ..... BV_{DGS}
Gate-to-Source Voltage ..... ±20V
Operating Ambient Temperature, T_A ..... –55°C to +150°C
Storage Temperature, T_S ..... –55°C to +150°C

† Notice: Stresses above those listed under "Absolute Maximum Ratings" may cause permanent damage to the device. This is a stress rating only, and functional operation of the device at those or any other conditions above those indicated in the operational sections of this specification is not intended. Exposure to maximum rating conditions for extended periods may affect device reliability.

DC ELECTRICAL CHARACTERISTICS

Electrical Specifications: T_A = 25°C unless otherwise specified. All DC parameters are 100% tested at 25°C unless otherwise stated. Pulse test: 300 µs pulse, 2% duty cycle

Parameter	Sym.	Min.	Typ.	Max.	Unit	Conditions
Drain-to-Source Breakdown Voltage	BV_{DSS}	400	—	—	V	V_{GS} = 0V, I_D = 100 µA
Gate Threshold Voltage	$V_{GS(th)}$	0.6	—	1.8	V	V_{GS} = V_{DS}, I_D = 1 mA
Gate Body Leakage Current	I_{GSS}	—	—	10	nA	V_{GS} = ±20V, V_{DS} = 0V (**Note 1**)
Zero-Gate Voltage Drain Current	I_{DSS}	—	—	1	µA	V_{GS} = 0V, V_{DS} = 0.8 Maximum rating
		—	—	100	µA	V_{DS} = 0.8 Maximum rating, V_{GS} = 0V, T_A = 125°C (**Note 1**)
On-State Drain Current	$I_{D(ON)}$	0.15	0.3	—	A	V_{GS} = 4.5V, V_{DS} = 10V
Static Drain-to-Source On-State Resistance	$R_{DS(ON)}$	—	9.5	12	Ω	V_{GS} = 4.5V, I_D = 100 mA
		—	17	30	Ω	V_{GS} = 4.5V, I_D = 100 mA, T_A = 125°C

Note 1: Specification is obtained by characterization and is not 100% tested.

AC ELECTRICAL CHARACTERISTICS

Electrical Specifications: T_A = 25°C unless otherwise specified. All AC parameters are not 100% sample tested.

Parameter	Sym.	Min.	Typ.	Max.	Unit	Conditions
Forward Transconductance	G_{FS}	125	350	—	mmho	V_{DS} = 15V, I_D = 100 mA
Input Capacitance	C_{ISS}	—	—	110	pF	V_{GS} = 0V, V_{DS} = 25V, f = 1 MHz
Common-Source Output Capacitance	C_{OSS}	—	—	30	pF	
Reverse Transfer Capacitance	C_{RSS}	—	—	10	pF	
Turn-On Delay Time	$t_{d(ON)}$	—	—	20	ns	V_{DD} = 25V, I_D = 100 mA, R_{GEN} = 25Ω
Rise Time	t_r	—	—	20	ns	
Turn-Off Delay Time	$t_{d(OFF)}$	—	—	65	ns	
Fall Time	t_f	—	—	65	ns	
DIODE PARAMETER						
Diode Forward Voltage Drop	V_{SD}	—	—	1.2	V	V_{GS} = 0V, I_{SD} = 160 mA (**Note 1**)

Note 1: Unless otherwise stated, all DC parameters are 100% tested at 25°C. Pulse test: 300 µs pulse, 2% duty cycle

© 2021 Microchip Technology Inc.

TEMPERATURE SPECIFICATIONS

Parameter	Sym.	Min.	Typ.	Max.	Unit	Conditions
TEMPERATURE RANGE						
Operating Ambient Temperature	T_A	–55	—	+150	°C	
Storage Temperature	T_S	–55	—	+150	°C	
PACKAGE THERMAL RESISTANCE						
3-lead TO-92	θ_{JA}	—	132	—	°C/W	

THERMAL CHARACTERISTICS

Package	I_D (Note 1) (Continuous) (mA)	I_D (Pulsed) (mA)	Power Dissipation at T_A = 25°C (W)	I_{DR} (Note 1) (mA)	I_{DRM} (mA)
3-lead TO-92	160	650	1	160	650

Note 1: I_D (continuous) is limited by maximum rated T_J.

2.0 PIN DESCRIPTION

The details on the pins of VN4012 are listed on Table 2-1. Refer to **Package Type** for the location of pins.

TABLE 2-1: PIN FUNCTION TABLE

Pin Number	Pin Name	Description
1	Source	Source
2	Gate	Gate
3	Drain	Drain

© 2021 Microchip Technology Inc.

3.0 FUNCTIONAL DESCRIPTION

Figure 3-1 illustrates the switching waveforms and test circuit for VN4012.

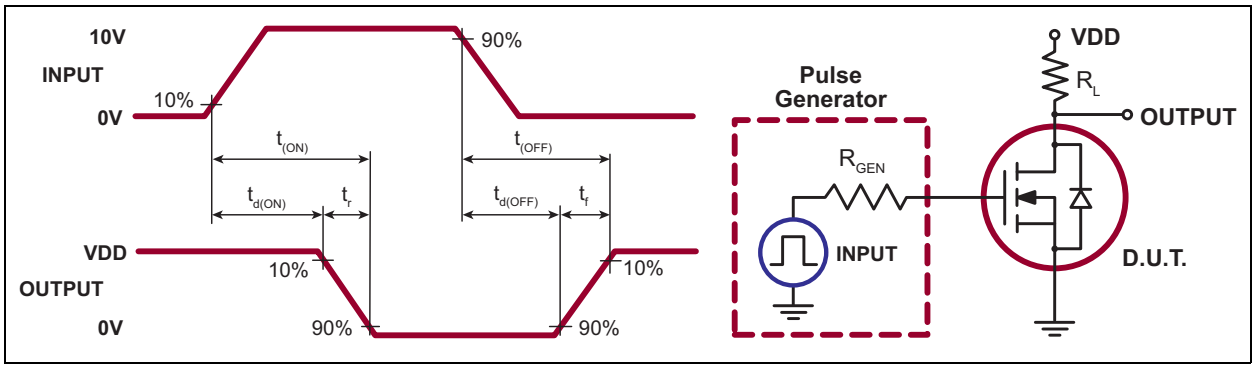

FIGURE 3-1: *Switching Waveforms and Test Circuit.*

TABLE 3-1: PRODUCT SUMMARY

BV_{DSS}/BV_{DGS} (V)	$R_{DS(ON)}$ (Maximum) (Ω)	$V_{GS(TH)}$ (Maximum) (V)	I_{DSS} (Minimum) (mA)
400	12	1.8	150

4.0 PACKAGING INFORMATION

4.1 Package Marking Information

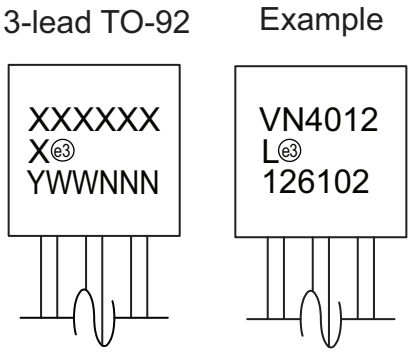

Legend:	XX...X	Product Code or Customer-specific information
	Y	Year code (last digit of calendar year)
	YY	Year code (last 2 digits of calendar year)
	WW	Week code (week of January 1 is week ‘01’)
	NNN	Alphanumeric traceability code
	(e3)	Pb-free JEDEC® designator for Matte Tin (Sn)
	*	This package is Pb-free. The Pb-free JEDEC designator ((e3)) can be found on the outer packaging for this package.

Note: In the event the full Microchip part number cannot be marked on one line, it will be carried over to the next line, thus limiting the number of available characters for product code or customer-specific information. Package may or not include the corporate logo.

© 2021 Microchip Technology Inc.

3-Lead TO-92 Package Outline (L/LL/N3)

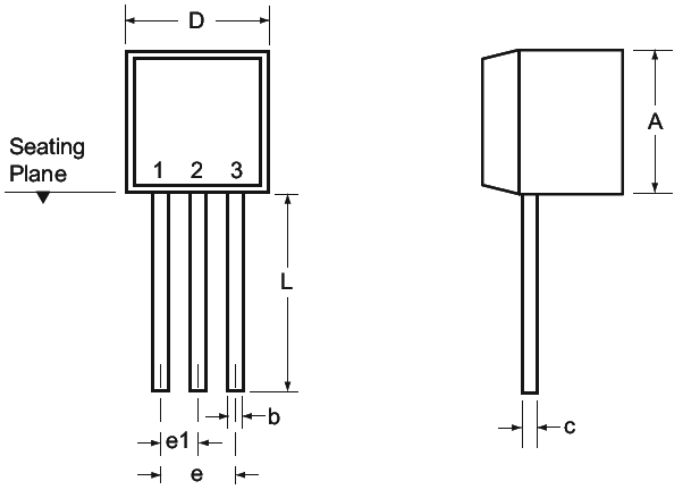

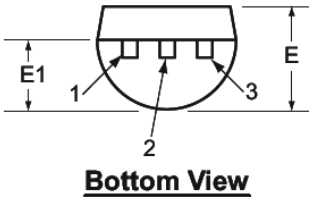

Note: For the most current package drawings, see the Microchip Packaging Specification at www.microchip.com/packaging.

Symbol		A	b	c	D	E	E1	e	e1	L
Dimensions (inches)	MIN	.170	.014†	.014†	.175	.125	.080	.095	.045	.500
	NOM	-	-	-	-	-	-	-	-	-
	MAX	.210	.022†	.022†	.205	.165	.105	.105	.055	.610*

JEDEC Registration TO-92.
** This dimension is not specified in the JEDEC drawing.*
† This dimension differs from the JEDEC drawing.
Drawings not to scale.

NOTES:

© 2021 Microchip Technology Inc.

APPENDIX A: REVISION HISTORY

Revision A (March 2021)

- Converted Supertex Doc# DSFP-VN4012 to Microchip DS20005997A
- Changed the package marking format
- Removed the 3-Lead TO-92 L P002, P003, P005, P013, and P014 media types to align packaging specifications with the actual BQM
- Added some sections to comply with the standard Microchip format
- Made minor text changes throughout the document

PRODUCT IDENTIFICATION SYSTEM

To order or obtain information, e.g., on pricing or delivery, contact your local Microchip representative or sales office.

PART NO.	XX	-	X	-	X
Device	Package Options		Environmental		Media Type

Device:	VN4012	=	N-Channel Enhancement-Mode Vertical DMOS FET
Package:	L	=	3-lead TO-92
Environmental:	G	=	Lead (Pb)-free/RoHS-compliant Package
Media Type:	(blank)	=	1000/Bag for an L Package

Example:

a) VN4012L-G:	N-Channel Enhancement-Mode, Vertical DMOS FET, 3-lead TO-92, 1000/Bag

© 2021 Microchip Technology Inc.

Note the following details of the code protection feature on Microchip devices:

- Microchip products meet the specifications contained in their particular Microchip Data Sheet.
- Microchip believes that its family of products is secure when used in the intended manner and under normal conditions.
- There are dishonest and possibly illegal methods being used in attempts to breach the code protection features of the Microchip devices. We believe that these methods require using the Microchip products in a manner outside the operating specifications contained in Microchip's Data Sheets. Attempts to breach these code protection features, most likely, cannot be accomplished without violating Microchip's intellectual property rights.
- Microchip is willing to work with any customer who is concerned about the integrity of its code.
- Neither Microchip nor any other semiconductor manufacturer can guarantee the security of its code. Code protection does not mean that we are guaranteeing the product is "unbreakable." Code protection is constantly evolving. We at Microchip are committed to continuously improving the code protection features of our products. Attempts to break Microchip's code protection feature may be a violation of the Digital Millennium Copyright Act. If such acts allow unauthorized access to your software or other copyrighted work, you may have a right to sue for relief under that Act.

Information contained in this publication is provided for the sole purpose of designing with and using Microchip products. Information regarding device applications and the like is provided only for your convenience and may be superseded by updates. It is your responsibility to ensure that your application meets with your specifications.

THIS INFORMATION IS PROVIDED BY MICROCHIP "AS IS". MICROCHIP MAKES NO REPRESENTATIONS OR WARRANTIES OF ANY KIND WHETHER EXPRESS OR IMPLIED, WRITTEN OR ORAL, STATUTORY OR OTHERWISE, RELATED TO THE INFORMATION INCLUDING BUT NOT LIMITED TO ANY IMPLIED WARRANTIES OF NON-INFRINGEMENT, MERCHANTABILITY, AND FITNESS FOR A PARTICULAR PURPOSE OR WARRANTIES RELATED TO ITS CONDITION, QUALITY, OR PERFORMANCE.

IN NO EVENT WILL MICROCHIP BE LIABLE FOR ANY INDIRECT, SPECIAL, PUNITIVE, INCIDENTAL OR CONSEQUENTIAL LOSS, DAMAGE, COST OR EXPENSE OF ANY KIND WHATSOEVER RELATED TO THE INFORMATION OR ITS USE, HOWEVER CAUSED, EVEN IF MICROCHIP HAS BEEN ADVISED OF THE POSSIBILITY OR THE DAMAGES ARE FORESEEABLE. TO THE FULLEST EXTENT ALLOWED BY LAW, MICROCHIP'S TOTAL LIABILITY ON ALL CLAIMS IN ANY WAY RELATED TO THE INFORMATION OR ITS USE WILL NOT EXCEED THE AMOUNT OF FEES, IF ANY, THAT YOU HAVE PAID DIRECTLY TO MICROCHIP FOR THE INFORMATION. Use of Microchip devices in life support and/or safety applications is entirely at the buyer's risk, and the buyer agrees to defend, indemnify and hold harmless Microchip from any and all damages, claims, suits, or expenses resulting from such use. No licenses are conveyed, implicitly or otherwise, under any Microchip intellectual property rights unless otherwise stated.

For information regarding Microchip's Quality Management Systems, please visit www.microchip.com/quality.

Trademarks

The Microchip name and logo, the Microchip logo, Adaptec, AnyRate, AVR, AVR logo, AVR Freaks, BesTime, BitCloud, chipKIT, chipKIT logo, CryptoMemory, CryptoRF, dsPIC, FlashFlex, flexPWR, HELDO, IGLOO, JukeBlox, KeeLoq, Kleer, LANCheck, LinkMD, maXStylus, maXTouch, MediaLB, megaAVR, Microsemi, Microsemi logo, MOST, MOST logo, MPLAB, OptoLyzer, PackeTime, PIC, picoPower, PICSTART, PIC32 logo, PolarFire, Prochip Designer, QTouch, SAM-BA, SenGenuity, SpyNIC, SST, SST Logo, SuperFlash, Symmetricom, SyncServer, Tachyon, TimeSource, tinyAVR, UNI/O, Vectron, and XMEGA are registered trademarks of Microchip Technology Incorporated in the U.S.A. and other countries.

AgileSwitch, APT, ClockWorks, The Embedded Control Solutions Company, EtherSynch, FlashTec, Hyper Speed Control, HyperLight Load, IntelliMOS, Libero, motorBench, mTouch, Powermite 3, Precision Edge, ProASIC, ProASIC Plus, ProASIC Plus logo, Quiet-Wire, SmartFusion, SyncWorld, Temux, TimeCesium, TimeHub, TimePictra, TimeProvider, WinPath, and ZL are registered trademarks of Microchip Technology Incorporated in the U.S.A.

Adjacent Key Suppression, AKS, Analog-for-the-Digital Age, Any Capacitor, AnyIn, AnyOut, Augmented Switching, BlueSky, BodyCom, CodeGuard, CryptoAuthentication, CryptoAutomotive, CryptoCompanion, CryptoController, dsPICDEM, dsPICDEM.net, Dynamic Average Matching, DAM, ECAN, Espresso T1S, EtherGREEN, IdealBridge, In-Circuit Serial Programming, ICSP, INICnet, Intelligent Paralleling, Inter-Chip Connectivity, JitterBlocker, maxCrypto, maxView, memBrain, Mindi, MiWi, MPASM, MPF, MPLAB Certified logo, MPLIB, MPLINK, MultiTRAK, NetDetach, Omniscient Code Generation, PICDEM, PICDEM.net, PICkit, PICtail, PowerSmart, PureSilicon, QMatrix, REAL ICE, Ripple Blocker, RTAX, RTG4, SAM-ICE, Serial Quad I/O, simpleMAP, SimpliPHY, SmartBuffer, SMART-I.S., storClad, SQI, SuperSwitcher, SuperSwitcher II, Switchtec, SynchroPHY, Total Endurance, TSHARC, USBCheck, VariSense, VectorBlox, VeriPHY, ViewSpan, WiperLock, XpressConnect, and ZENA are trademarks of Microchip Technology Incorporated in the U.S.A. and other countries.

SQTP is a service mark of Microchip Technology Incorporated in the U.S.A.

The Adaptec logo, Frequency on Demand, Silicon Storage Technology, and Symmcom are registered trademarks of Microchip Technology Inc. in other countries.

GestIC is a registered trademark of Microchip Technology Germany II GmbH & Co. KG, a subsidiary of Microchip Technology Inc., in other countries.

All other trademarks mentioned herein are property of their respective companies.

© 2021, Microchip Technology Incorporated, All Rights Reserved.

ISBN: 978-1-5224-7964-2

Worldwide Sales and Service

AMERICAS

Corporate Office
2355 West Chandler Blvd.
Chandler, AZ 85224-6199
Tel: 480-792-7200
Fax: 480-792-7277
Technical Support:
http://www.microchip.com/support
Web Address:
www.microchip.com

Atlanta
Duluth, GA
Tel: 678-957-9614
Fax: 678-957-1455

Austin, TX
Tel: 512-257-3370

Boston
Westborough, MA
Tel: 774-760-0087
Fax: 774-760-0088

Chicago
Itasca, IL
Tel: 630-285-0071
Fax: 630-285-0075

Dallas
Addison, TX
Tel: 972-818-7423
Fax: 972-818-2924

Detroit
Novi, MI
Tel: 248-848-4000

Houston, TX
Tel: 281-894-5983

Indianapolis
Noblesville, IN
Tel: 317-773-8323
Fax: 317-773-5453
Tel: 317-536-2380

Los Angeles
Mission Viejo, CA
Tel: 949-462-9523
Fax: 949-462-9608
Tel: 951-273-7800

Raleigh, NC
Tel: 919-844-7510

New York, NY
Tel: 631-435-6000

San Jose, CA
Tel: 408-735-9110
Tel: 408-436-4270

Canada - Toronto
Tel: 905-695-1980
Fax: 905-695-2078

ASIA/PACIFIC

Australia - Sydney
Tel: 61-2-9868-6733

China - Beijing
Tel: 86-10-8569-7000

China - Chengdu
Tel: 86-28-8665-5511

China - Chongqing
Tel: 86-23-8980-9588

China - Dongguan
Tel: 86-769-8702-9880

China - Guangzhou
Tel: 86-20-8755-8029

China - Hangzhou
Tel: 86-571-8792-8115

China - Hong Kong SAR
Tel: 852-2943-5100

China - Nanjing
Tel: 86-25-8473-2460

China - Qingdao
Tel: 86-532-8502-7355

China - Shanghai
Tel: 86-21-3326-8000

China - Shenyang
Tel: 86-24-2334-2829

China - Shenzhen
Tel: 86-755-8864-2200

China - Suzhou
Tel: 86-186-6233-1526

China - Wuhan
Tel: 86-27-5980-5300

China - Xian
Tel: 86-29-8833-7252

China - Xiamen
Tel: 86-592-2388138

China - Zhuhai
Tel: 86-756-3210040

ASIA/PACIFIC

India - Bangalore
Tel: 91-80-3090-4444

India - New Delhi
Tel: 91-11-4160-8631

India - Pune
Tel: 91-20-4121-0141

Japan - Osaka
Tel: 81-6-6152-7160

Japan - Tokyo
Tel: 81-3-6880- 3770

Korea - Daegu
Tel: 82-53-744-4301

Korea - Seoul
Tel: 82-2-554-7200

Malaysia - Kuala Lumpur
Tel: 60-3-7651-7906

Malaysia - Penang
Tel: 60-4-227-8870

Philippines - Manila
Tel: 63-2-634-9065

Singapore
Tel: 65-6334-8870

Taiwan - Hsin Chu
Tel: 886-3-577-8366

Taiwan - Kaohsiung
Tel: 886-7-213-7830

Taiwan - Taipei
Tel: 886-2-2508-8600

Thailand - Bangkok
Tel: 66-2-694-1351

Vietnam - Ho Chi Minh
Tel: 84-28-5448-2100

EUROPE

Austria - Wels
Tel: 43-7242-2244-39
Fax: 43-7242-2244-393

Denmark - Copenhagen
Tel: 45-4485-5910
Fax: 45-4485-2829

Finland - Espoo
Tel: 358-9-4520-820

France - Paris
Tel: 33-1-69-53-63-20
Fax: 33-1-69-30-90-79

Germany - Garching
Tel: 49-8931-9700

Germany - Haan
Tel: 49-2129-3766400

Germany - Heilbronn
Tel: 49-7131-72400

Germany - Karlsruhe
Tel: 49-721-625370

Germany - Munich
Tel: 49-89-627-144-0
Fax: 49-89-627-144-44

Germany - Rosenheim
Tel: 49-8031-354-560

Israel - Ra'anana
Tel: 972-9-744-7705

Italy - Milan
Tel: 39-0331-742611
Fax: 39-0331-466781

Italy - Padova
Tel: 39-049-7625286

Netherlands - Drunen
Tel: 31-416-690399
Fax: 31-416-690340

Norway - Trondheim
Tel: 47-7288-4388

Poland - Warsaw
Tel: 48-22-3325737

Romania - Bucharest
Tel: 40-21-407-87-50

Spain - Madrid
Tel: 34-91-708-08-90
Fax: 34-91-708-08-91

Sweden - Gothenberg
Tel: 46-31-704-60-40

Sweden - Stockholm
Tel: 46-8-5090-4654

UK - Wokingham
Tel: 44-118-921-5800
Fax: 44-118-921-5820

© 2021 Microchip Technology Inc.

ENTEGRECİ

Bu belge www.entegreci.com üzerinden sunulmaktadır.

Elektronik komponent tedarikinde Entegreci

Entegreci, Eskişehir merkezli, Türkiye geneline satış yapan bir elektronik komponent mağazasıdır. Entegreler (IC), mikrodenetleyiciler, transistörler, diyotlar, pasif elemanlar, konnektörler, modüller ve geliştirme kartları tek adetten seri üretim adetlerine kadar satılır. Ürün sayfalarında güncel stok durumunu, fiyatı ve datasheet bağlantısını bulabilirsiniz.

Parça koduyla arama

Üretici parça numarasını yazın; stok ve fiyatı hemen görün.

www.entegreci.com

Ürün kategorileri

Entegreden kapasitöre tüm elektronik komponent kategorileri.

Kategorilere göz atın

Üreticiler

Aradığınız üreticinin ürünlerini tek sayfada inceleyin.

Üreticileri görün

Toplu alım ve teklif

Listede olmayan ya da yüksek adetli parçalar için teklif isteyin.

Teklif isteyin

www.entegreci.com | **destek@entegreci.com** | **0850 305 90 34**

Entegreci is an online electronic components store based in Türkiye. Search by manufacturer part number to see stock, prices and datasheets for integrated circuits, microcontrollers, transistors, passive components and connectors, or request a quote for parts that are not listed.

Bu sayfa Entegreci tarafından eklenmiştir. Belgenin önceki sayfaları asıl yayıncısına aittir ve içeriği değiştirilmemiştir; en güncel sürüm için belgenin yayıncısına başvurun.