UTT18P10

Power MOSFET

100V, 18A P-CHANNEL POWER MOSFET

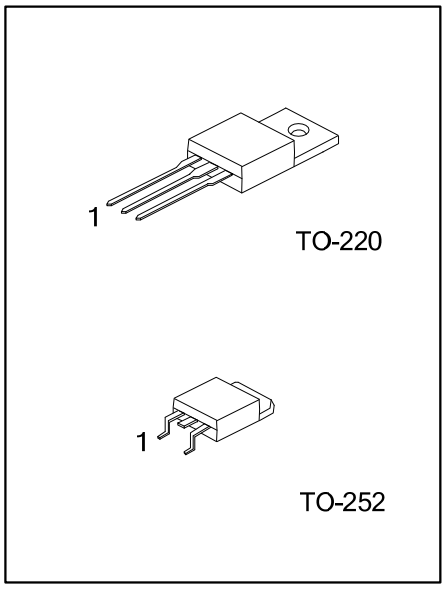

■ DESCRIPTION

The UTC **UTT18P10** is a P-channel power MOSFET using UTC's advanced technology to provide the customers with high switching speed, cost-effectiveness and a minimum on-state resistance. It can also withstand high energy in the avalanche.

■ FEATURES

* $R_{DS(ON)}$ < 0.20Ω @ V_{GS}=-10V, I_D=-18A
* High Switching Speed

■ SYMBOL

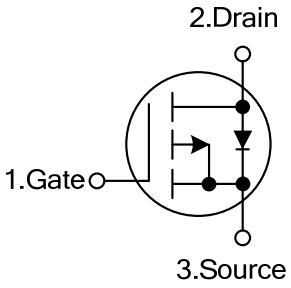

■ ORDERING INFORMATION

Ordering Number		Package	Pin Assignment			Packing
Lead Free	Halogen Free		1	2	3	
UTT18P10L-TN3-R	UTT18P10G-TN3-R	TO-252	G	D	S	Tape Reel
UTT18P10L-TA3-T	UTT18P10G-TA3-T	TO-220	G	D	S	Tube

Note: Pin Assignment: G: Gate D: Drain S: Source

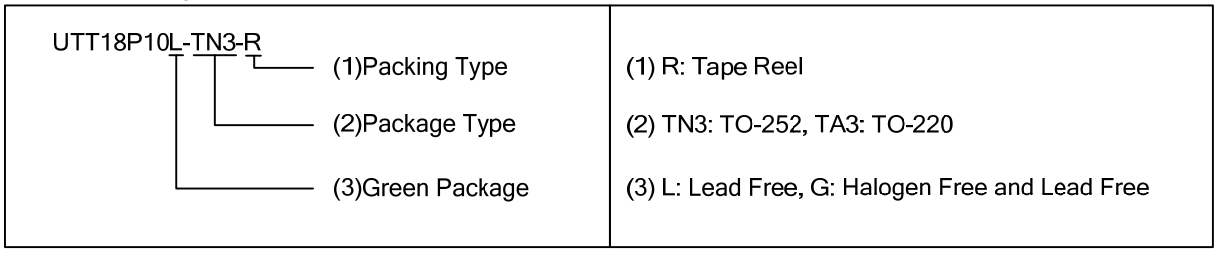

■ MARKING

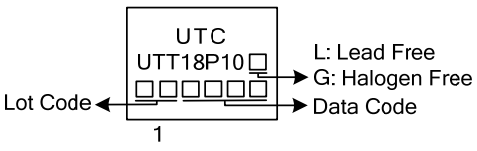

Copyright © 2015 Unisonic Technologies Co., Ltd

■ ABSOLUTE MAXIMUM RATINGS (T_J=25°C, unless otherwise specified)

PARAMETER		SYMBOL	RATINGS	UNIT
Drain-Source Voltage		V_{DSS}	-100	V
Gate-Source Voltage		V_{GSS}	±20	V
Drain Current	Continuous, V_{GSS}@-10V T_C=25°C	I_D	-18	A
	Pulsed (Note 2)	I_{DM}	-72	A
Avalanche Energy	Single Pulsed (Note 3)	E_{AS}	40	mJ
Power Dissipation (T_C=25°C)	TO-252	P_D	150	W
	TO-220		140	
Junction Temperature		T_J	+150	°C
Storage Temperature		T_{STG}	-55~+150	°C

Notes: 1. Absolute maximum ratings are those values beyond which the device could be permanently damaged. Absolute maximum ratings are stress ratings only and functional device operation is not implied.
2. Repetitive rating; pulse width limited by max. junction temperature
3. V_{DD}=-50V, starting T_J=25°C, L=1mH, R_G=25Ω, I_{AS}=-9A. (See Figure 2a, 2b)

■ THERMAL CHARACTERISTICS

PARAMETER		SYMBOL	RATINGS	UNIT
Junction to Case	TO-252	θ_{JC}	1.0	°C/W
	TO-220		1.1	

■ ELECTRICAL CHARACTERISTICS (T_J=25°C, unless otherwise specified)

PARAMETER		SYMBOL	TEST CONDITIONS	MIN	TYP	MAX	UNIT
OFF CHARACTERISTICS							
Drain-Source Breakdown Voltage		BV_{DSS}	I_D=-250μA, V_{GS}=0V	-100			V
Drain-Source Leakage Current		I_{DSS}	V_{DS}=-100V, V_{GS}=0V,			-1	μA
Gate- Source Leakage Current	Forward	I_{GSS}	V_{GS}=+20V			+100	nA
	Reverse		V_{GS}=-20V			-100	nA
ON CHARACTERISTICS							
Gate Threshold Voltage		$V_{GS(TH)}$	V_{DS}=V_{GS}, I_D=-250μA	-1.5		-2.5	V
Static Drain-Source On-State Resistance		$R_{DS(ON)}$	V_{GS}=-10V, I_D=-18A (Note 2)			0.20	Ω
DYNAMIC PARAMETERS							
Input Capacitance		C_{ISS}	V_{DS}=-25V, V_{GS}=0V, f=1.0MHz		1400		pF
Output Capacitance		C_{OSS}			590		pF
Reverse Transfer Capacitance		C_{RSS}			140		pF
SWITCHING PARAMETERS							
Total Gate Charge		Q_G	V_{DS}=-80V, V_{GS}=-10V, I_D=-18A, See Fig 3 (Note 2)			61	nC
Gate to Source Charge		Q_{GS}				14	nC
Gate to Drain ("Miller") Charge		Q_{GD}				29	nC
Turn-ON Delay Time		$t_{D(ON)}$	V_{DD}=-50V, I_D=-18A, R_G=9.1Ω, R_D = 2.4Ω, See Fig. 1(Note 2)		16		ns
Rise Time		t_R			73		ns
Turn-OFF Delay Time		$t_{D(OFF)}$			34		ns
Fall-Time		t_F			57		ns
SOURCE- DRAIN DIODE RATINGS AND CHARACTERISTICS							
Maximum Body-Diode Continuous Current		I_S				-18	A
Maximum Body-Diode Pulsed Current (Note 1)		I_{SM}				-72	A
Drain-Source Diode Forward Voltage		V_{SD}	T_J=25°C, I_S=-18A, V_{GS}=0V (Note 2)			-5.0	V

Notes: 1. Repetitive rating; pulse width limited by max. junction temperature.
2. Pulse width ≤ 300μs; duty cycle ≤ 2%.

■ TEST CIRCUITS AND WAVEFORMS

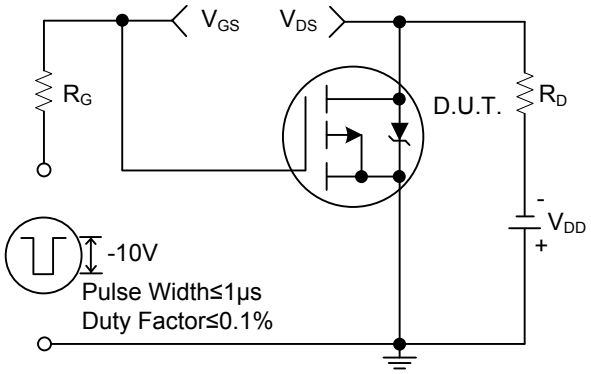

Fig. 1a Switching Time Test Circuit

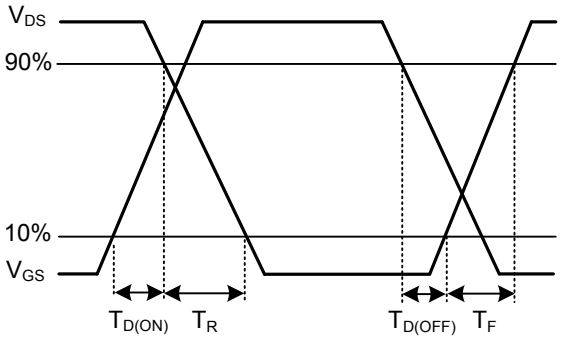

Fig. 1b Switching Time Waveforms

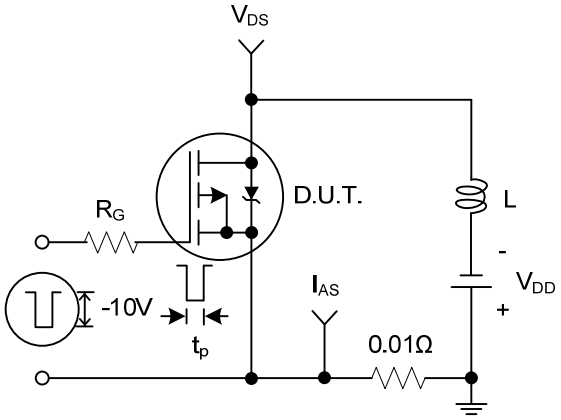

Fig. 2a Unclampled Inductive Test Circuit

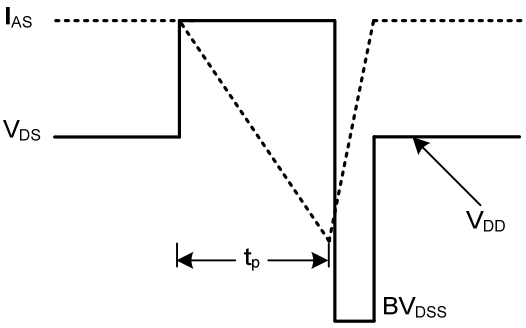

Fig. 2b Unclampled Inductive Waveforms

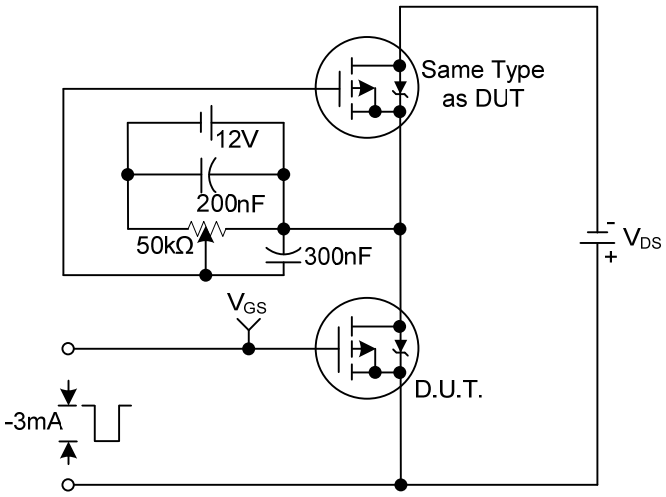

Fig.3a Gate Charge Test Circuit

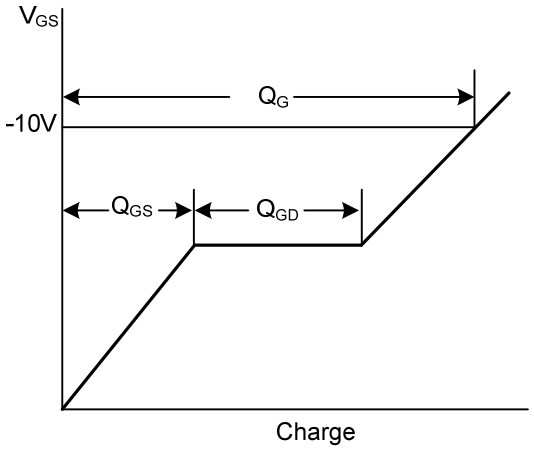

Fig. 3b Gate Charge Waveform

■ TEST CIRCUITS AND WAVEFORMS(Cont.)

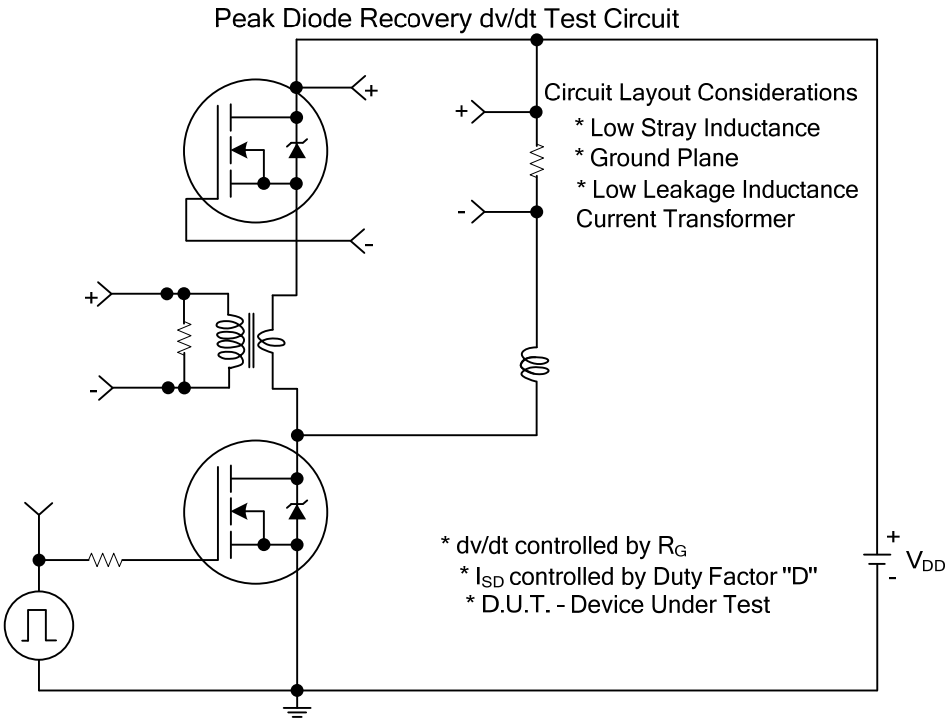

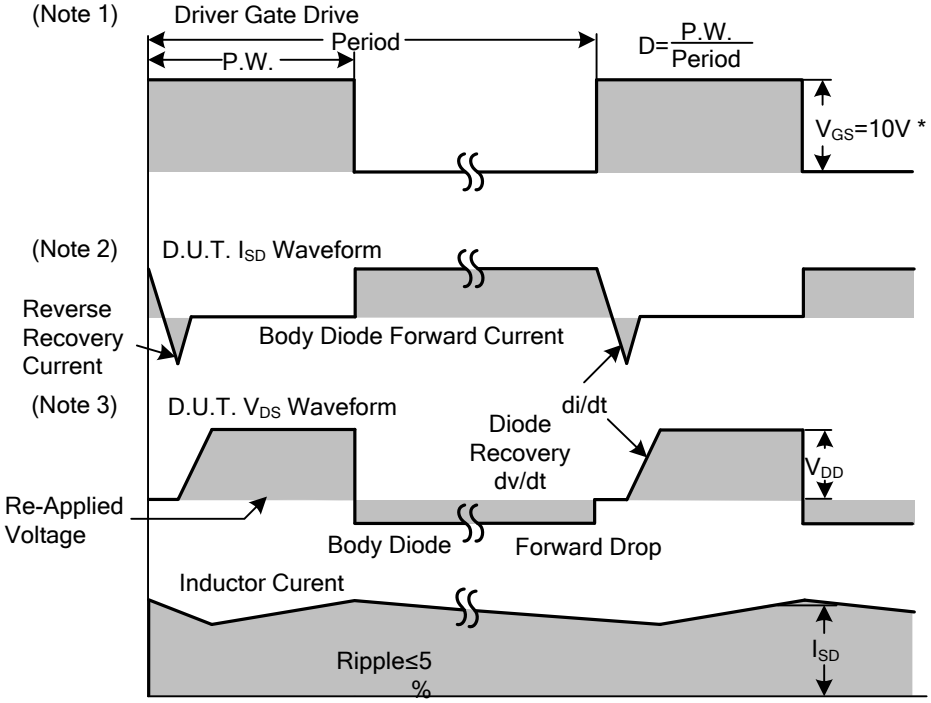

*** V_{GS}=5V for Logic Level and 3V Drive Devices

For N and P Channel Power MOSFET

Notes: 1. Repetitive rating; pulse width limited by max. junction temperature.
2. V_{DD}=-25V, starting T_J=25°C, L=2.7mH, R_G=25Ω, I_{AS}=-18A. (See Figure 2)
3. I_{SD}≤-18A, di/dt≤200A/μs, V_{DD}≤BV_{DSS}, T_J≤150°C

■ TYPICAL CHARACTERISTICS

Drain Current vs. Source to Drain Voltage

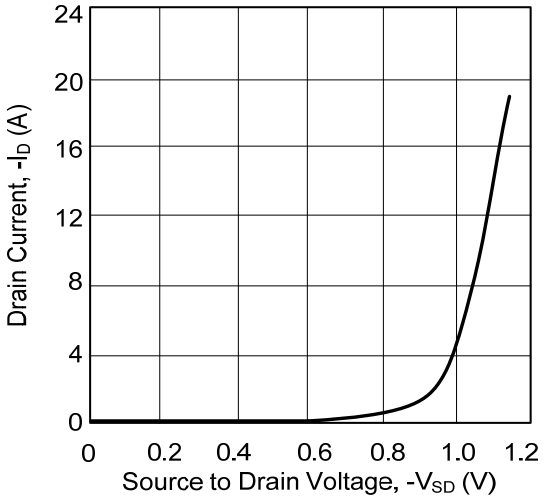

UTC assumes no responsibility for equipment failures that result from using products at values that exceed, even momentarily, rated values (such as maximum ratings, operating condition ranges, or other parameters) listed in products specifications of any and all UTC products described or contained herein. UTC products are not designed for use in life support appliances, devices or systems where malfunction of these products can be reasonably expected to result in personal injury. Reproduction in whole or in part is prohibited without the prior written consent of the copyright owner. The information presented in this document does not form part of any quotation or contract, is believed to be accurate and reliable and may be changed without notice.

ENTEGRECİ

Bu belge www.entegreci.com üzerinden sunulmaktadır.

Elektronik komponent tedarikinde Entegreci

Entegreci, Eskişehir merkezli, Türkiye geneline satış yapan bir elektronik komponent mağazasıdır. Entegreler (IC), mikrodenetleyiciler, transistörler, diyotlar, pasif elemanlar, konnektörler, modüller ve geliştirme kartları tek adetten seri üretim adetlerine kadar satılır. Ürün sayfalarında güncel stok durumunu, fiyatı ve datasheet bağlantısını bulabilirsiniz.

Parça koduyla arama

Üretici parça numarasını yazın; stok ve fiyatı hemen görün.

www.entegreci.com

Ürün kategorileri

Entegreden kapasitöre tüm elektronik komponent kategorileri.

Kategorilere göz atın

Üreticiler

Aradığınız üreticinin ürünlerini tek sayfada inceleyin.

Üreticileri görün

Toplu alım ve teklif

Listede olmayan ya da yüksek adetli parçalar için teklif isteyin.

Teklif isteyin

www.entegreci.com | **destek@entegreci.com** | **0850 305 90 34**

Entegreci is an online electronic components store based in Türkiye. Search by manufacturer part number to see stock, prices and datasheets for integrated circuits, microcontrollers, transistors, passive components and connectors, or request a quote for parts that are not listed.

Bu sayfa Entegreci tarafından eklenmiştir. Belgenin önceki sayfaları asıl yayıncısına aittir ve içeriği değiştirilmemiştir; en güncel sürüm için belgenin yayıncısına başvurun.