-4.0A, -20V P-CHANNEL POWER MOSFET

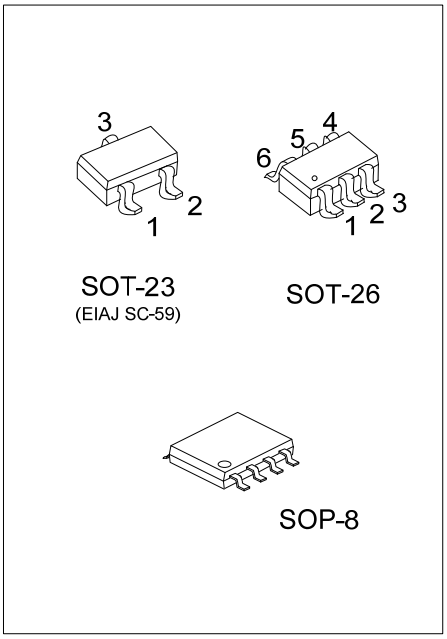

■ DESCRIPTION

The UTC **UT3415** is a P-channel MOS Field Effect Transistor. it uses UTC's advanced technology to provide the customers with high switching speed and a minimum on-state resistance.

The UTC **UT3415** is suitable for high voltage switching applications.

■ FEATURES

* $R_{DS(ON)}$ ≤ 45 mΩ @ V_{GS}=-4.5V, I_D=-4.0A
  $R_{DS(ON)}$ ≤ 62 mΩ @ V_{GS}=-2.5V, I_D=-4.0A
  $R_{DS(ON)}$ ≤ 84 mΩ @ V_{GS}=-1.8V, I_D=-2.0A
  $R_{DS(ON)}$ ≤ 105 mΩ @ V_{GS}=-1.5V, I_D=-1.0A
* High switching speed
* Low input capacitance

■ SYMBOL

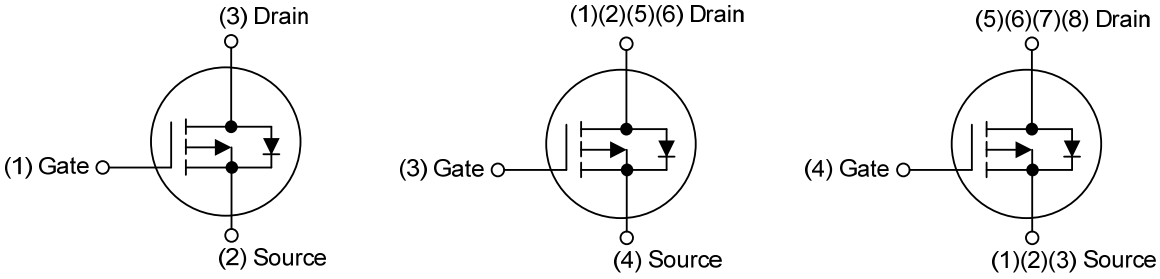

■ ORDERING INFORMATION

Ordering Number		Package	Pin Assignment								Packing
Lead Free	Halogen Free		1	2	3	4	5	6	7	8	
UT3415L-AE3-R	UT3415G-AE3-R	SOT-23	G	S	D	-	-	-	-	-	Tape Reel
UT3415L-AG6-R	UT3415G-AG6-R	SOT-26	D	D	G	S	D	D	-	-	Tape Reel
UT3415L-S08-R	UT3415G-S08-R	SOP-8	S	S	S	G	D	D	D	D	Tape Reel

Note: Pin Assignment: G: Gate S: Source D: Drain

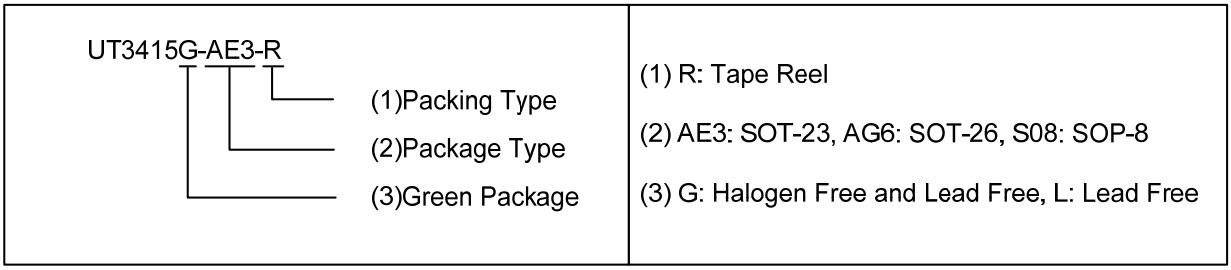

Copyright © 2023 Unisonic Technologies Co., Ltd

■ MARKING

PACKAGE	MARKING
SOT-23	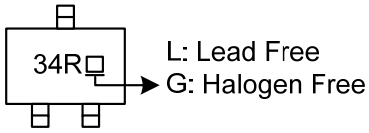
SOT-26	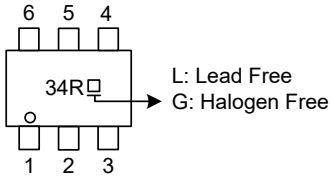
SOP-8	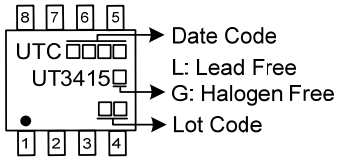

■ ABSOLUTE MAXIMUM RATING (T_A=25°C, unless otherwise specified)

PARAMETER		SYMBOL	RATINGS	UNIT
Drain-Source Voltage		V_{DSS}	-20	V
Gate-Source Voltage		V_{GSS}	±8	V
Drain Current	DC	I_D	-4	A
	Pulsed (Note 2)	I_{DM}	-8	A
Single Avalanche Energy (Note 3)		E_{AS}	48	mJ
Peak Diode Recovery dv/dt (Note 4)		dv/dt	1.38	V/ns
Power Dissipation	SOT-23	P_D	0.7	W
	SOT-26		0.6	W
	SOP-8		1	W
Junction Temperature		T_J	+150	°C
Storage Temperature Range		T_{STG}	-55 ~ +150	°C

Notes: 1. Absolute maximum ratings are those values beyond which the device could be permanently damaged. Absolute maximum ratings are stress ratings only and functional device operation is not implied.
2. Repetitive Rating: Pulse width limited by maximum junction temperature.
3. L=0.1mH, I_{AS}=-31.1A, V_{DD}= -20V, R_G=25Ω, Starting T_J=25°C.
4. I_{SD} ≤-1.0A, di/dt ≤200A/μs, V_{DD} ≤BV_{DSS}, Starting T_J=25°C.

■ THERMAL DATA

PARAMETER		SYMBOL	RATINGS	UNIT
Junction to Ambient	SOT-23	θ_{JA}	177	°C/W
	SOT-26		208	°C/W
	SOP-8		125	°C/W

Note: Device mounted on FR-4 substrate PC board, 2oz copper, with 1inch square copper plate.

■ ELECTRICAL CHARACTERISTICS (T_A=25°C unless otherwise specified)

PARAMETER		SYMBOL	TEST CONDITIONS	MIN	TYP	MAX	UNIT
OFF CHARACTERISTICS							
Drain-Source Breakdown Voltage		BV_{DSS}	V_{GS} =0 V, I_D =-250 μA	-20			V
Drain-Source Leakage Current		I_{DSS}	V_{DS}=-20V, V_{GS}=0V			-1.0	μA
Gate-Source Leakage Current	Forward	I_{GSS}	V_{GS}=+8V, V_{DS}=0V			+100	nA
	Reverse		V_{GS}=-8V, V_{DS}=0V			-100	nA
ON CHARACTERISTICS							
Gate Threshold Voltage		$V_{GS(TH)}$	V_{DS}= V_{GS}, I_D=-250μA	-0.3		-0.9	V
Static Drain-Source On-State Resistance		$R_{DS(ON)}$	V_{GS}=-4.5V, I_D=-4.0A			45	mΩ
			V_{GS}=-2.5V, I_D=-4.0A			62	mΩ
			V_{GS}=-1.8V, I_D=-2.0A			84	mΩ
			V_{GS}=-1.5V, I_D=-1.0A			105	mΩ
DYNAMIC PARAMETERS							
Input Capacitance		C_{ISS}	V_{GS}=0V, V_{DS}=-10V, f=1.0MHz		1000		pF
Output Capacitance		C_{OSS}			200		pF
Reverse Transfer Capacitance		C_{RSS}			170		pF
SWITCHING PARAMETERS							
Total Gate Charge		Q_G	V_{DS}=-10V, V_{GS}=-10V, I_D=-4.0A , I_G=-1mA (Note 1, 2)		30		nC
Gate to Source Charge		Q_{GS}			1.5		nC
Gate to Drain Charge		Q_{GD}			4		nC
Turn-ON Delay Time		$t_{D(ON)}$	V_{DD}=-10V, V_{GS}=-10V, I_D=-4.0A, R_G=3Ω (Note 1, 2)		4		ns
Rise Time		t_R			17		ns
Turn-OFF Delay Time		$t_{D(OFF)}$			44		ns
Fall-Time		t_F			26		ns
SOURCE-DRAIN DIODE RATINGS AND CHARACTERISTICS							
Maximum Continuous Drain-Source Diode Forward Current		I_S				-4	A
Maximum Pulsed Drain-Source Diode Forward Current		I_{SM}				-8	A
Diode Forward Voltage		V_{SD}	I_F=-4.0A, V_{GS}=0V			-1.4	V

Notes: 1. Pulse Test: Pulse width ≤ 300μs, Duty cycle ≤ 2%.
2. Essentially independent of operating temperature.

■ TEST CIRCUITS AND WAVEFORMS

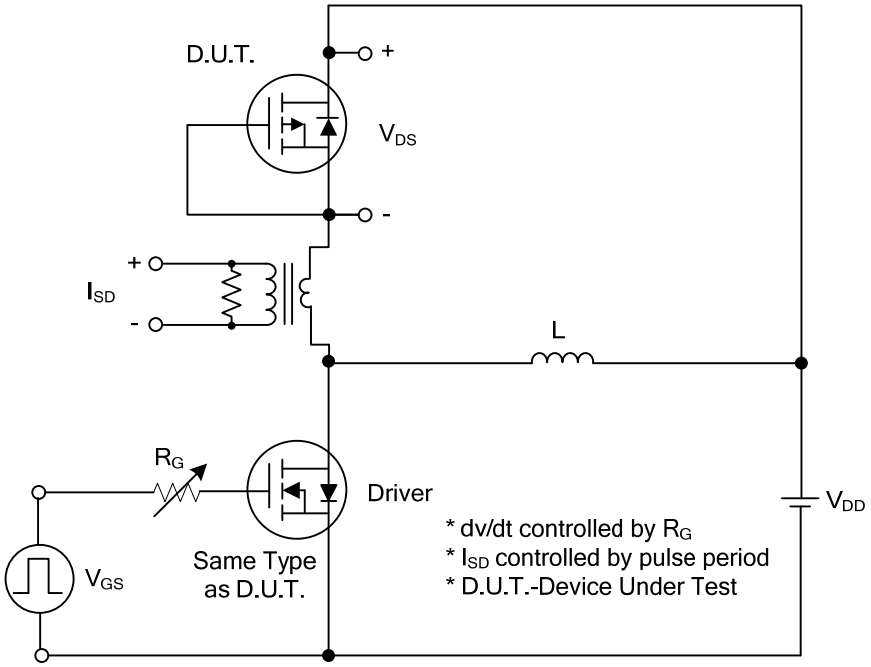

Peak Diode Recovery dv/dt Test Circuit

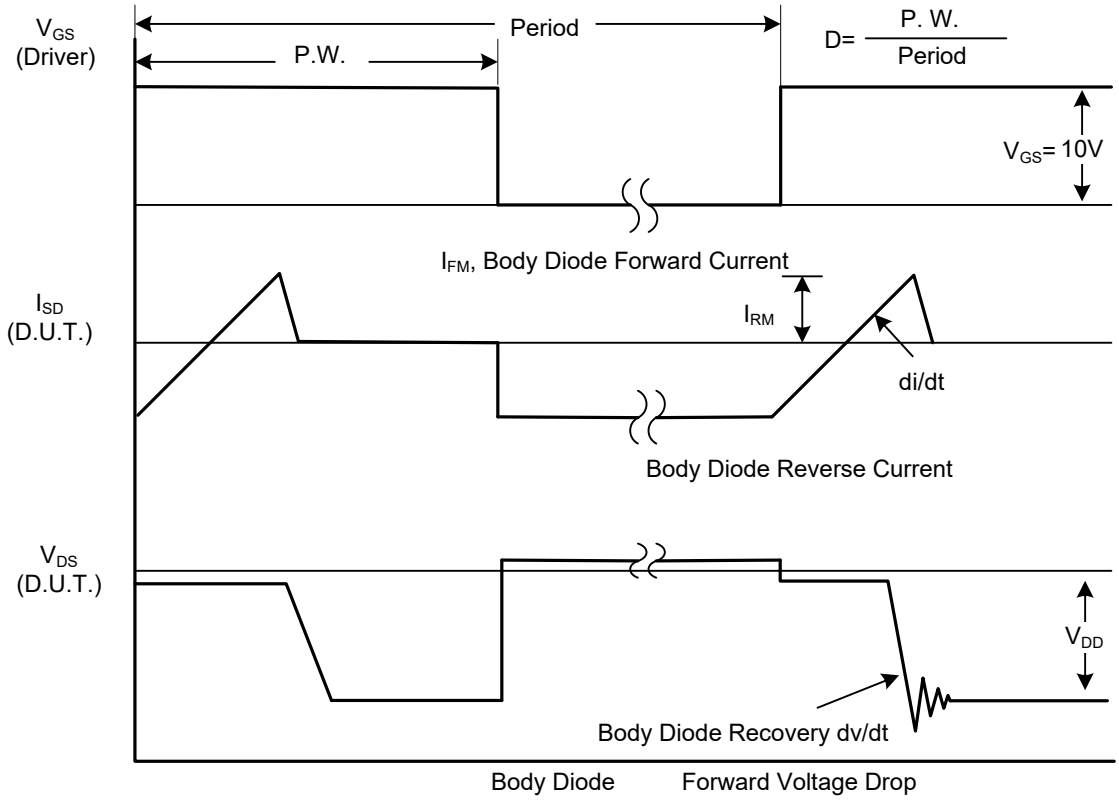

Peak Diode Recovery dv/dt Waveforms

■ TEST CIRCUITS AND WAVEFORMS

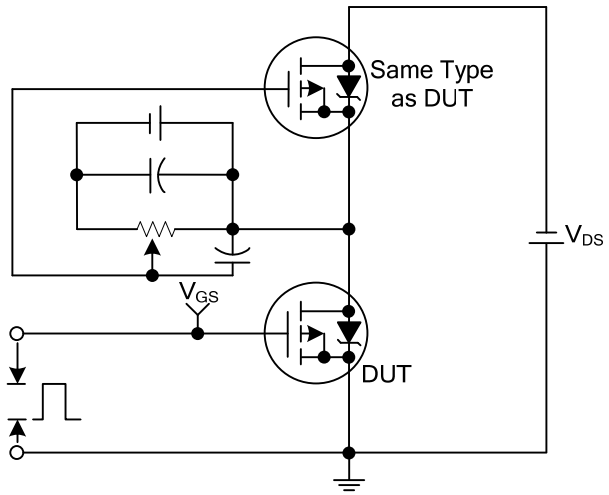

Gate Charge Test Circuit

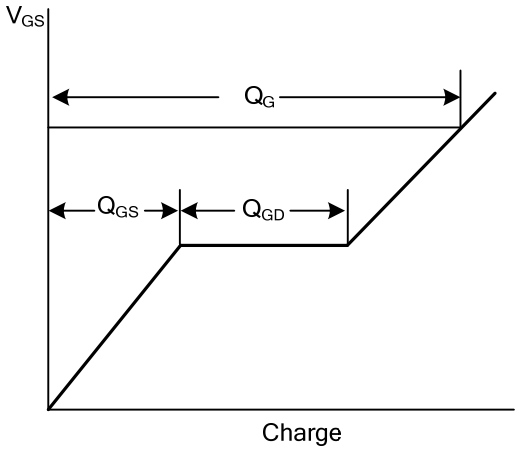

Gate Charge Waveforms

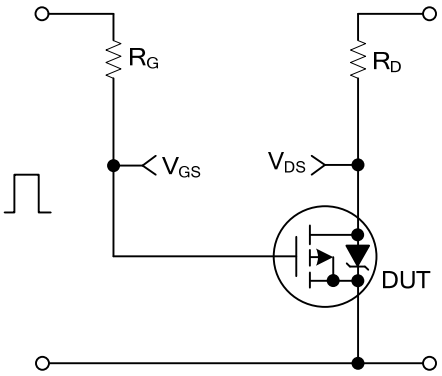

Resistive Switching Test Circuit

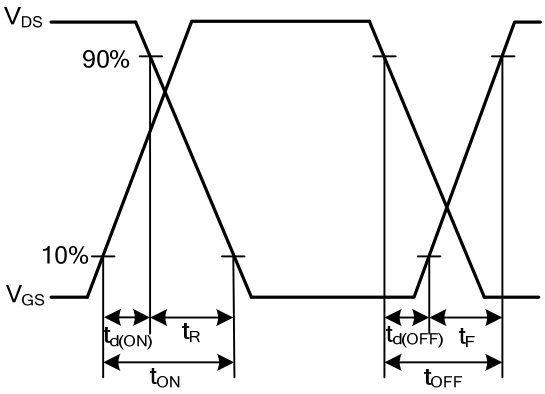

Resistive Switching Waveforms

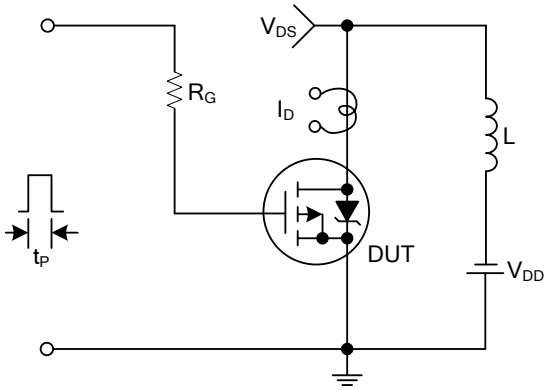

Unclamped Inductive Switching Test Circuit

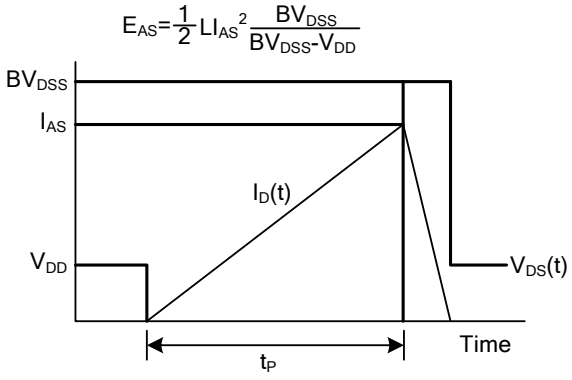

Unclamped Inductive Switching Waveforms

■ TYPICAL CHARACTERISTICS

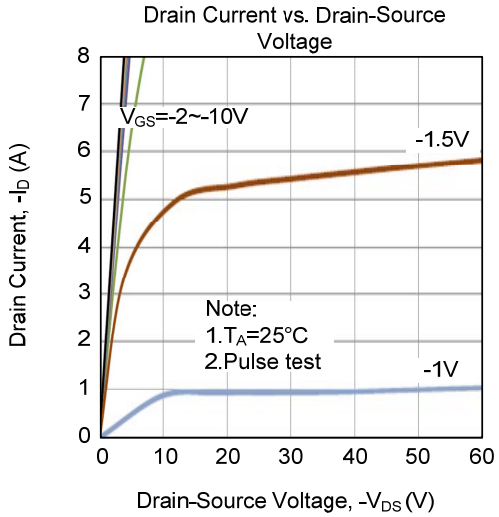

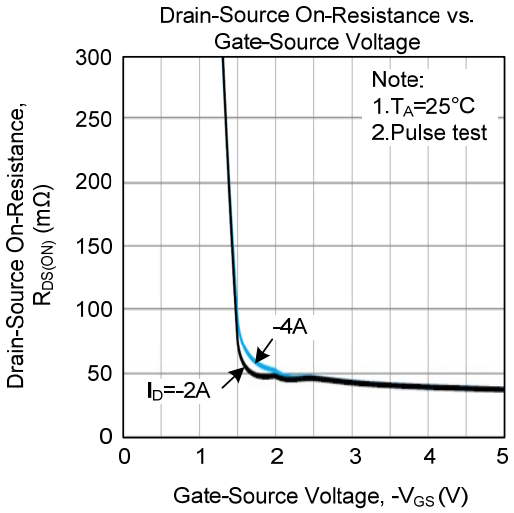

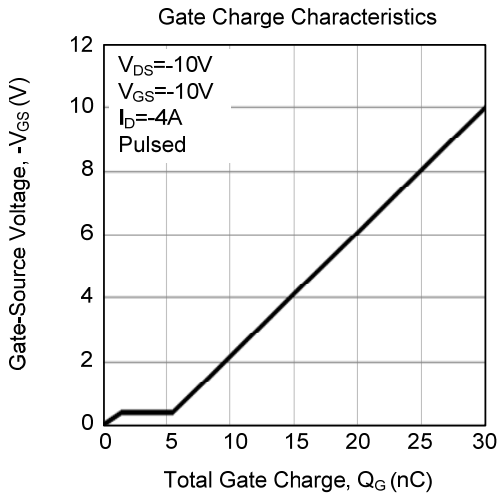

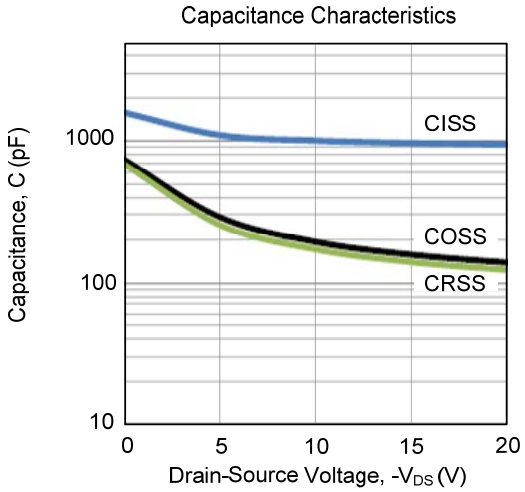

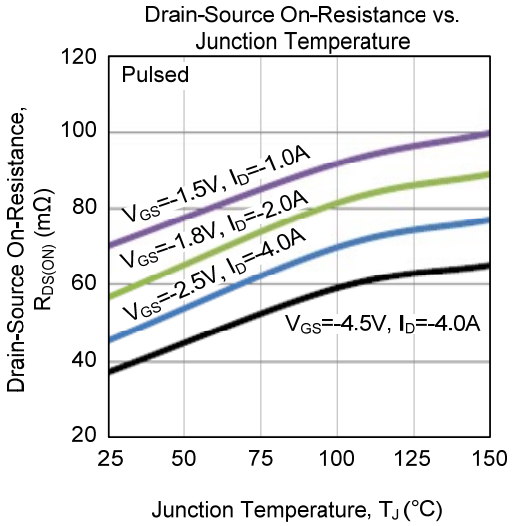

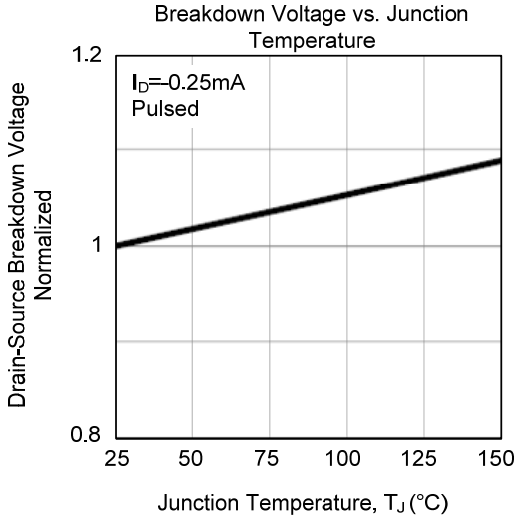

■ TYPICAL CHARACTERISTICS (Cont.)

Gate Threshold Voltage vs. Junction Temperature

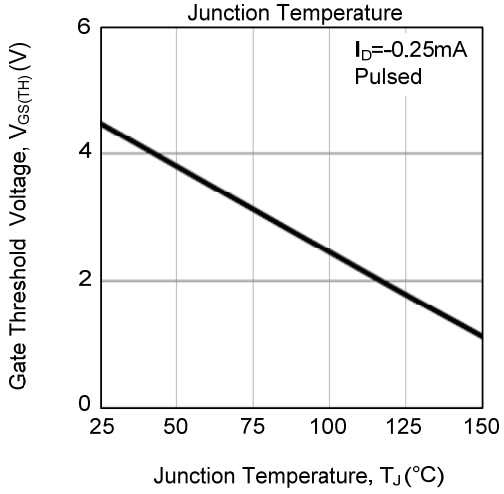

Source Current vs. Source-Drain Voltage

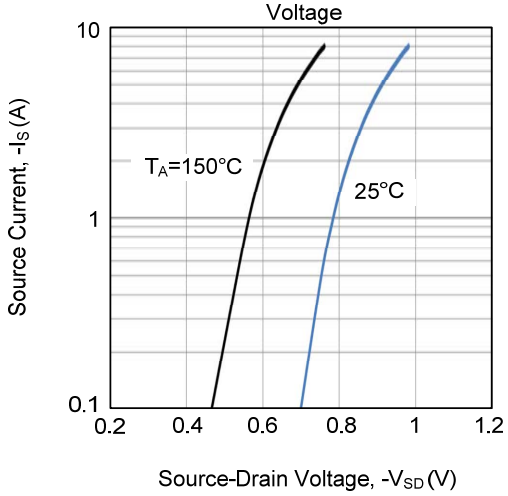

Drain Current vs. Gate-Source Voltage

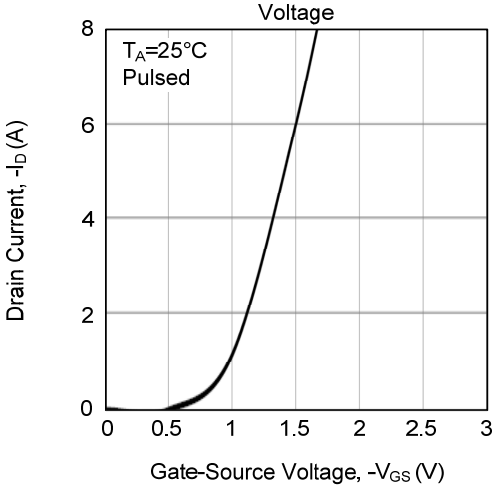

Drain-Source On-Resistance vs. Drain Current

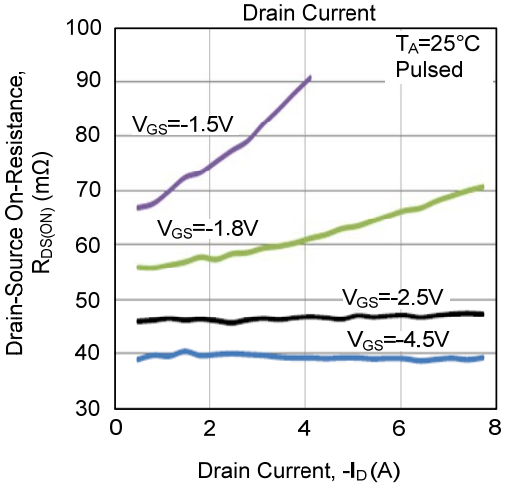

Power Dissipation vs. Junction Temperature

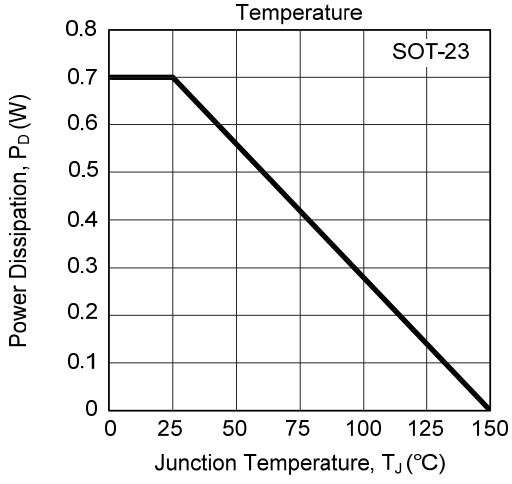

Drain Current vs. Junction Temperature

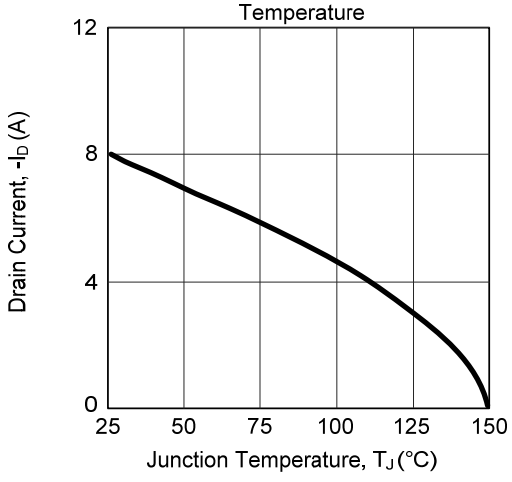

■ TYPICAL CHARACTERISTICS (Cont.)

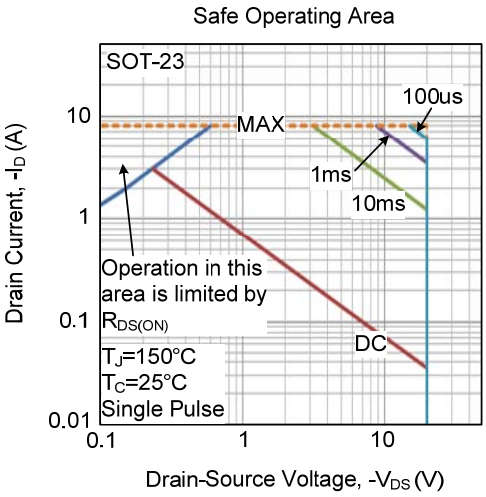

UTC assumes no responsibility for equipment failures that result from using products at values that exceed, even momentarily, rated values (such as maximum ratings, operating condition ranges, or other parameters) listed in products specifications of any and all UTC products described or contained herein. UTC products are not designed for use in life support appliances, devices or systems where malfunction of these products can be reasonably expected to result in personal injury. Reproduction in whole or in part is prohibited without the prior written consent of the copyright owner. UTC reserves the right to make changes to information published in this document, including without limitation specifications and product descriptions, at any time and without notice. This document supersedes and replaces all information supplied prior to the publication hereof.

ENTEGRECİ

Bu belge www.entegreci.com üzerinden sunulmaktadır.

Elektronik komponent tedarikinde Entegreci

Entegreci, Eskişehir merkezli, Türkiye geneline satış yapan bir elektronik komponent mağazasıdır. Entegreler (IC), mikrodenetleyiciler, transistörler, diyotlar, pasif elemanlar, konnektörler, modüller ve geliştirme kartları tek adetten seri üretim adetlerine kadar satılır. Ürün sayfalarında güncel stok durumunu, fiyatı ve datasheet bağlantısını bulabilirsiniz.

Parça koduyla arama

Üretici parça numarasını yazın; stok ve fiyatı hemen görün.

www.entegreci.com

Ürün kategorileri

Entegreden kapasitöre tüm elektronik komponent kategorileri.

Kategorilere göz atın

Üreticiler

Aradığınız üreticinin ürünlerini tek sayfada inceleyin.

Üreticileri görün

Toplu alım ve teklif

Listede olmayan ya da yüksek adetli parçalar için teklif isteyin.

Teklif isteyin

www.entegreci.com | **destek@entegreci.com** | **0850 305 90 34**

Entegreci is an online electronic components store based in Türkiye. Search by manufacturer part number to see stock, prices and datasheets for integrated circuits, microcontrollers, transistors, passive components and connectors, or request a quote for parts that are not listed.

Bu sayfa Entegreci tarafından eklenmiştir. Belgenin önceki sayfaları asıl yayıncısına aittir ve içeriği değiştirilmemiştir; en güncel sürüm için belgenin yayıncısına başvurun.