NEC
ELECTRON DEVICE

BIPOLAR ANALOG INTEGRATED CIRCUIT

μPC1905

SWITCHING REGULATOR CONTROL CIRCUIT FOR 500 kHz OPERATION

μPC1905 is a control IC for the high performance switching power supply equipped with high speed/high sensitivity protection circuit. Control ICs for the high performance switching power supply have 3 series of μPC1099, 1905, 1906. The features of μPC1905 are as follows:

① Supply voltage is as high as 31 V.
→ It is possible to drive output power MOS FET with high voltage.
② Hysteresis voltage of under voltage lockout circuit is 6.5 V.
→ The ripple allowance of input capacitor is wide and a smaller capacitor can be used.

CONTROL IC FAMILY FOR THE HIGH PERFORMANCE SWITCHING POWER SUPPLY

PART NUMBER	SUPPLY VOLTAGE	START-UP THRESHOLD VOLTAGE	THRESHOLD HYSTERESIS	OVER CURRENT LATCH PROTECTION MODE
μPC1099	26 V	11 V	3 V	Pulse by pulse current limiting
μPC1905	31 V	16.5 V	6.5 V	Pulse by pulse current limiting
μPC1906	31 V	16.5 V	6.5 V	Shut down and V_{CC} reset

FEATURES

- Directly drive power MOS FET (totem pole circuit adopted)
- Pulse by pulse over current latch circuit incorporated
- Over voltage latch circuit incorporated
- Under voltage lockout circuit incorporated
- Remote control circuit incorporated
- Error amplifier incorporated

PART NUMBER	PACKAGE	QUALITY GRADE
μPC1905CX	16 pin plastic DIP (300 mil)	Standard
μPC1905GS	16 pin plastic SOP (300 mil)	

Please refer to "Quality grade on NEC Semiconductor Devices" (Document number IEI-1209) published by NEC Corporation to know the specification of quality grade on the devices and its recommended applications.

Document No. IC-2961
(O. D. No. IC-7946)
Date Published November 1991 M
Printed in Japan

© NEC Corporation 1991

PIN CONNECTION DIAGRAM (Top View)

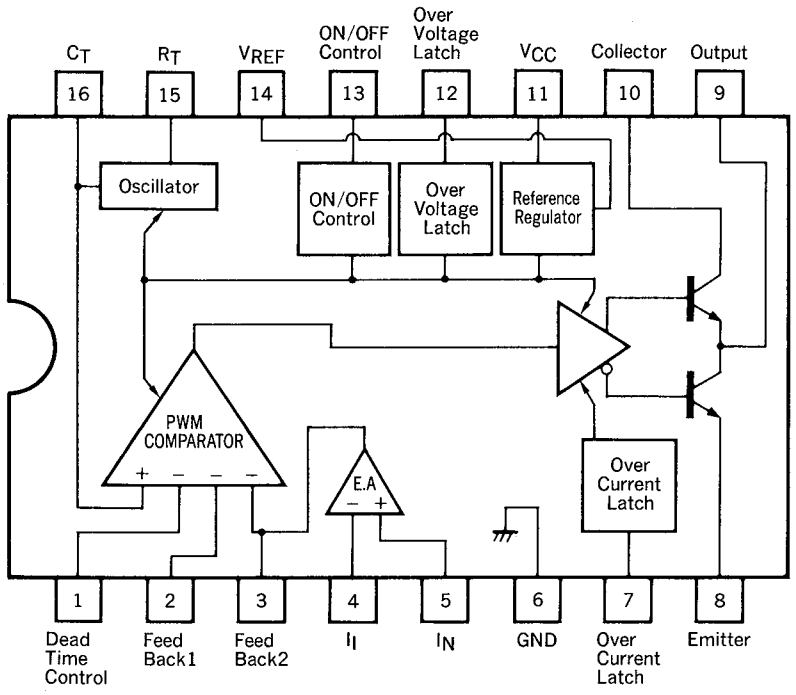

ABSOLUTE MAXIMUM RATING (T_a = 25 °C)

PARAMETER		SYMBOL	RATING	UNIT
Supply Voltage		V_{CC}	31	V
Output Voltage		V_C	31	V
Output Current		$I_{C(DC)}$	100	mA
Peak Output Current		$I_{C(peak)}$	1.2	A
Total Power Dissipation	μPC1905CX	P_T (T_a = 25 °C)	1 000	mW
	μPC1905GS	P_T (T_a = 25 °C)	694	mW
Operation Temperature		T_{opt}	−20 to +85	°C
Storage Temperature		T_{stg}	−55 to +150	°C

RECOMMENDED OPERATION REQUIREMENTS

PARAMETER	SYMBOL	MIN.	TYP.	MAX.	UNIT
Supply Voltage	V_{CC}	12	18	30	V
Oscillation Frequency	f_{OSC}	50	200	500	kHz
Output Load Capacitance	C_L	–	2 200	3 000	pF

OPERATION WAVES

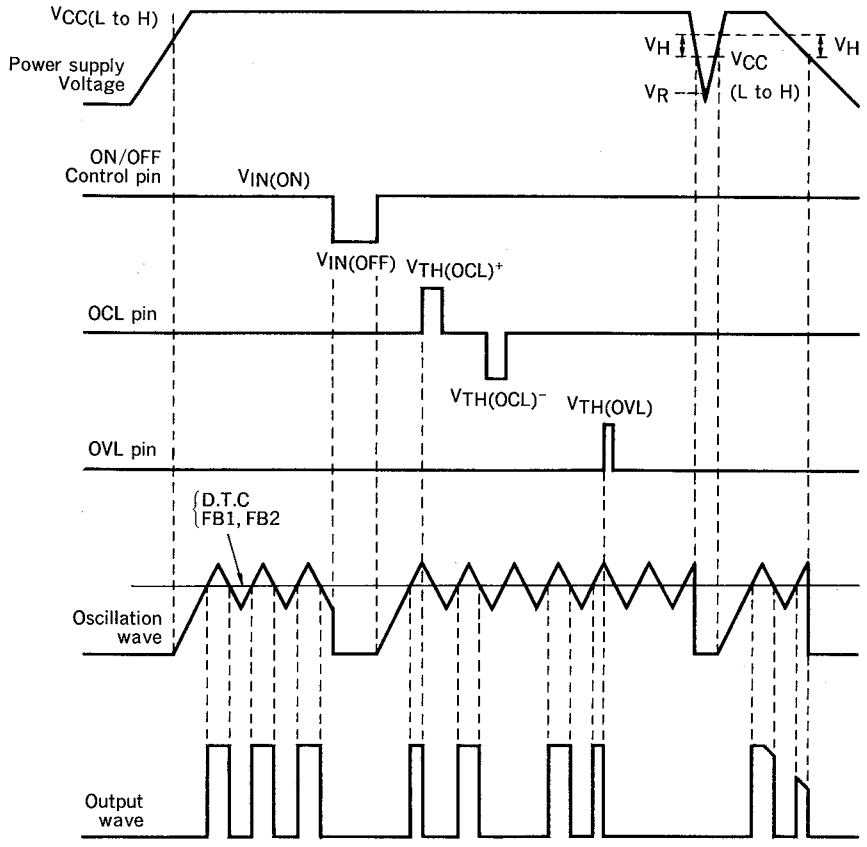

ELECTRICAL CHARACTERISTICS (T_a = 25 °C, V_{CC} = 18 V, C_T = 470 pF, R_T ≒ 10 kΩ, f_{OSC} = 200 kHz)

BLOCK	PARAMETER	SYMBOL	MIN.	TYP.	MAX.	UNIT	CONDITIONS
Total	Standby Current	$I_{CC(SB)}$	0.1	0.25	0.4	mA	V_{CC} = 15 V, −10 °C ≤ T_a ≤ 85 °C
	Circuit Current at OVL Operation Mode	$I_{CC(OVL)}$		10		mA	
	Circuit Current at Off Mode	$I_{CC(OFF)}$		10		mA	
	Circuit Current	I_{CC}		10	15	mA	V_{CC} = V_C = 24 V, V_D = 2.7 V, no load
Under Voltage Lockout Section	Start-Up Threshold Voltage	$V_{CC(L\ to\ H)}$	15.5	16.5	17.5	V	
	Threshold Hysteresis	V_H	5.5	6.5	7.5	V	
Reference Voltage Section	Output Voltage	V_{REF}	4.8	5	5.2	V	I_{REF} = 0
	Line Regulation	REG_{IN}		4	10	mV	12 V ≤ V_{CC} ≤ 30 V, I_{REF} = 0
	Load Regulation	REG_L		2	12	mV	0 ≤ I_{REF} ≤ 3 mA
	Output Voltage Temperature Coefficient	$V_{REF}/\Delta T$		100	700	μV/°C	I_{REF} = 0, −10 °C ≤ T_a ≤ +85 °C
	Short Circuit Current	$I_{O\ short}$		15		mA	V_{REF} = 0
PWM Section	Input Bias Current	I_B			10	μA	
	Low Level Threshold Voltage	$V_{TH(L)}$		1.5		V	
	High Level Threshold Voltage	$V_{TH(H)}$		3.5		V	
	Dead Time Temperature Coefficient	$\Delta DT/\Delta T$		1	5	%	V_D = 0.54 V_{REF}, −10 °C ≤ T_a ≤ +85 °C
Oscillator Section	Oscillation Frequency	f_{OSC}	180	200	220	kHz	
	Frequency Line Regulation	$\Delta f/\Delta V_{CC}$		0.6		%	12 V ≤ V_{CC} ≤ 30 V
	Frequency Temperature Coefficient	$\Delta f/\Delta T$		1	5	%	−10 °C ≤ T_a ≤ +85 °C
Output Section	Low Level Output Voltage	V_{OL}			0.5	V	I_{SINK} = 3 mA, V_{CC} = V_C
	High Level Output Voltage	V_{OH}		V_{CC}−1.6		V	I_{SOURCE} = 30 mA, V_{CC} = V_C
	Output Voltage Rise Time	t_r		80		ns	R_L = 15 Ω, C_L = 2 200 pF, V_{CC} = V_C
	Output Voltage Fall Time	t_f		30		ns	
Remote Control Section	Input Voltage at Output ON	$V_{IN(ON)}$	2.3	2.5	2.7	V	
	Input Voltage at Output OFF	$V_{IN(OFF)}$	2.1	2.3	2.5	V	
	Hysteresis Width	V_H	0.1	0.2	0.3	V	
Over Voltage Latch Section	Over Voltage Threshold Voltage	$V_{TH(OVL)}$	2.0	2.4	2.8	V	−10 °C ≤ T_a ≤ +85 °C
	Input Bias Current	$I_{B(OVL)}$			4	μA	OVL pin voltage = $V_{TH(OVL)}$
	OVL Reset Voltage	$V_{R(OVL)}$		2		V	
	Delay to Output	$t_{d(OVL)}$		600		ns	
Over Current Latch Section	Over Current Threshold Voltage	$V_{TH(OCL)^+}$	200	220	240	mV	−10 °C ≤ T_a ≤ +85 °C
	Over Current Threshold Voltage	$V_{TH(OCL)^-}$	−230	−210	−190	mV	−10 °C ≤ T_a ≤ +85 °C
	OCL Pin Output Current	$I_{B(OCL)}$		250		μA	
	Delay to Output	$t_{d(OCL)^+}$		120		ns	
	Delay to Output	$t_{d(OCL)^-}$		190		ns	

BLOCK	PARAMETER	SYMBOL	MIN.	TYP.	MAX.	UNIT	CONDITIONS
Error Amplification Section	Input Bias Current	$I_{B(AMP)}$			1	μA	V_{IN} = 2.5 V
	Open-Loop Voltage Gain	A_v	60	90		dB	V_{FB} = 2.9 V
	Unit Gain Bandwidth	f_{unity}	1	1.6		MHz	
	High Level Output Voltage	V_{om^+}	3.0			V	
	Low Level Output Voltage	V_{om^-}			1.0	V	
	Common Mode Input Voltage Range	V_{ICM^+}	3			V	12 V ≤ V_{CC} ≤ 30 V,
	Common Mode Input Voltage Range	V_{ICM^-}			−0.3	V	−10 °C ≤ T_a ≤ +85 °C

TYPICAL CHARACTERISTICS (T_a = 25 °C)

$P_T - T_a$

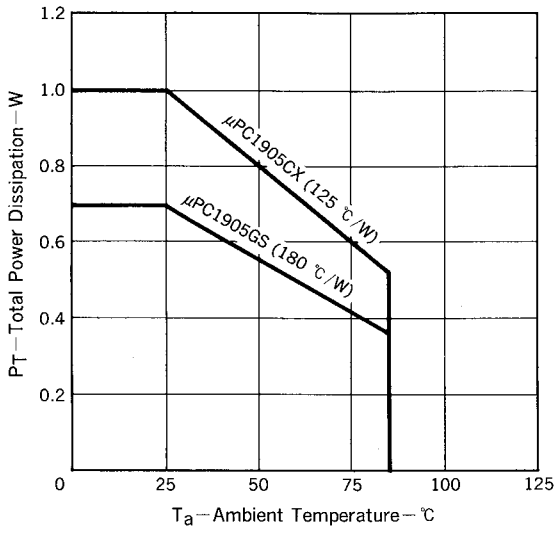

UNDER VOLTAGE LOCKOUT SECTION

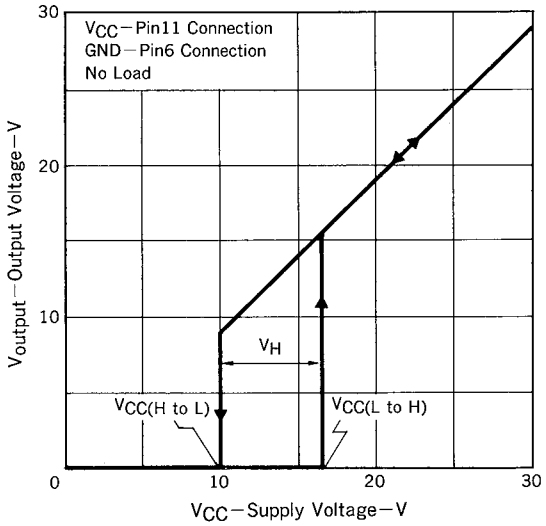

$I_{CC} - V_{CC}$

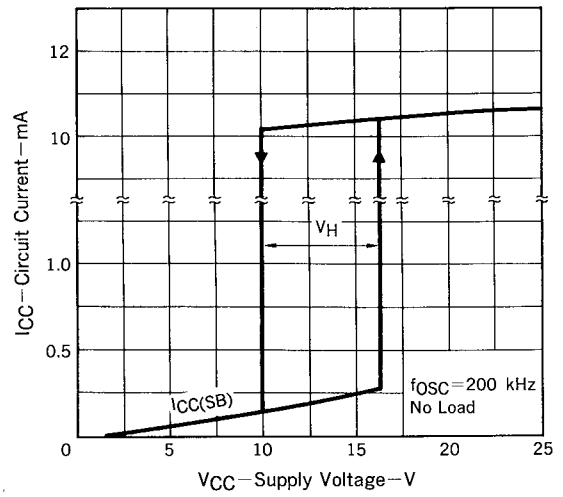

$I_{CC} - V_{CC}$ (OVL Mode)

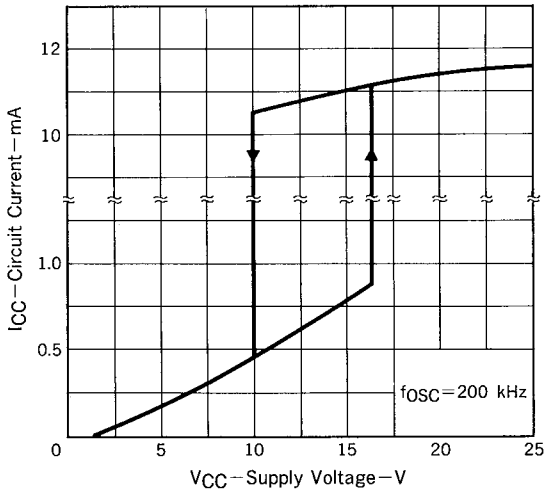

$I_{CC(SB)} - T_a$

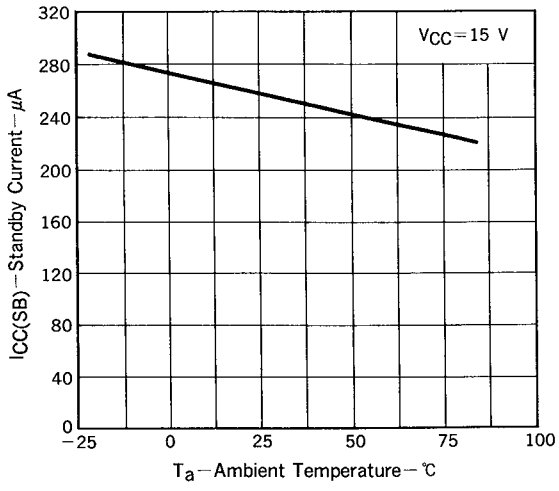

$V_{output} - V_{IN}$

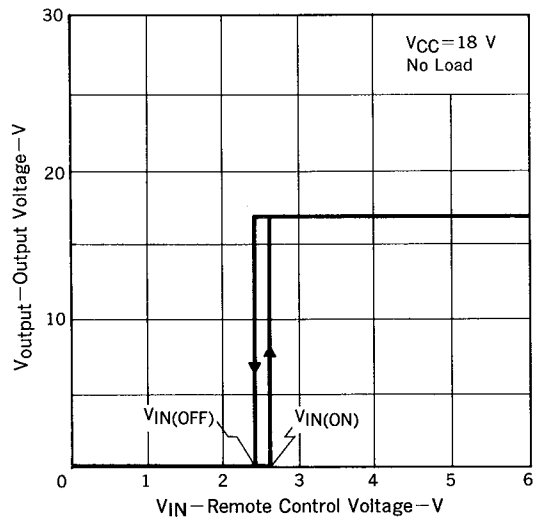

$\Delta V_{REF} - T_a$

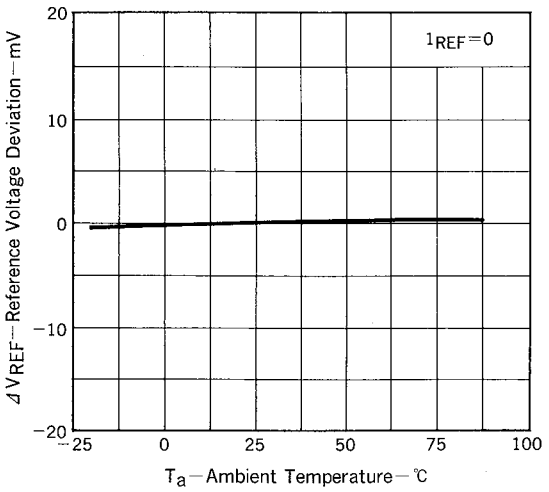

$f_{OSC} - R_T, C_T$

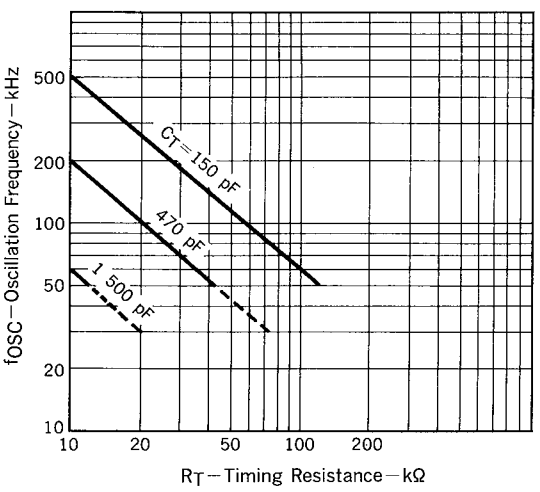

$f_{OSC} - T_a$

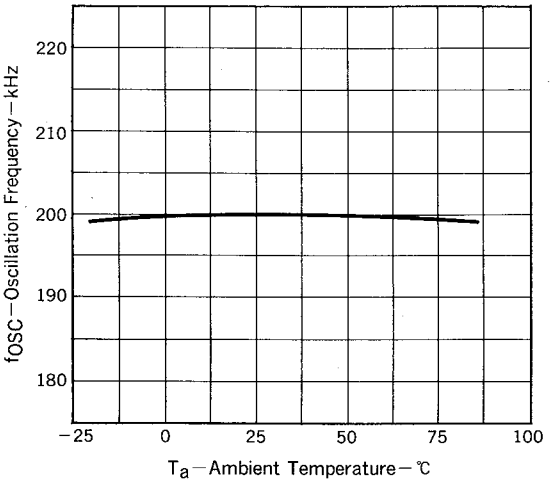

$V_{TH(L)}, V_{TH(H)} - f_{OSC}$

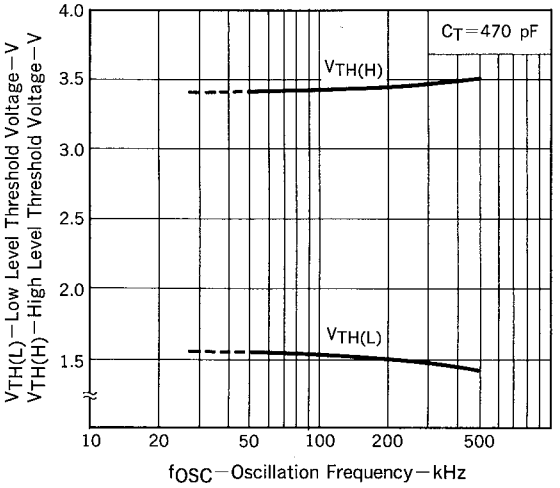

Duty – V_D

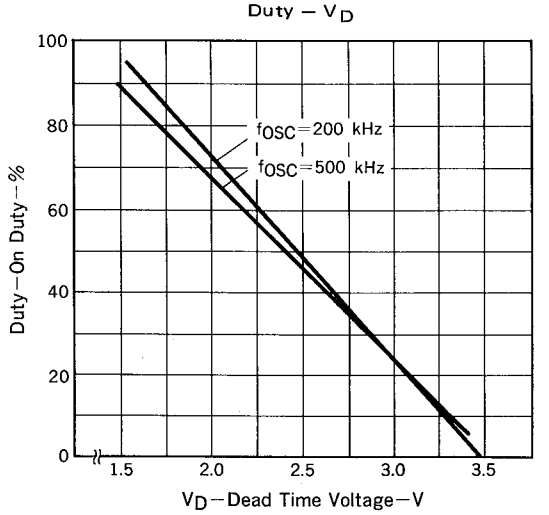

Duty – T_a

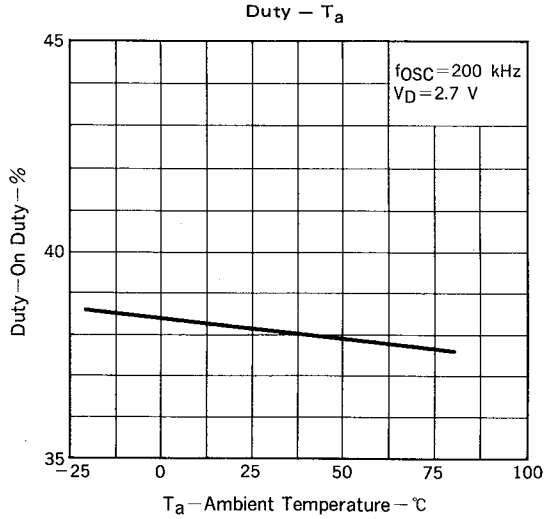

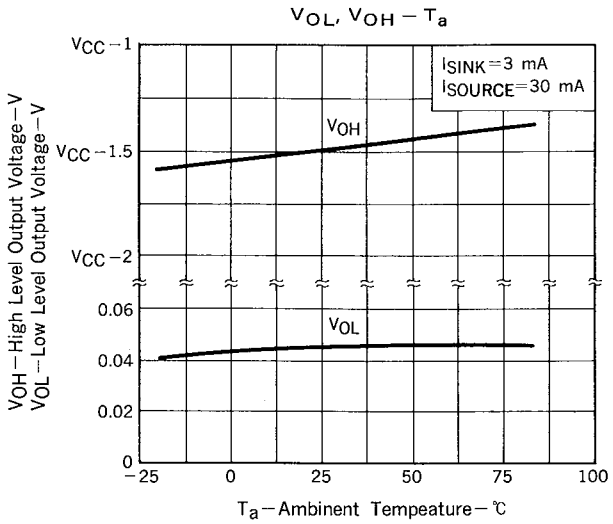

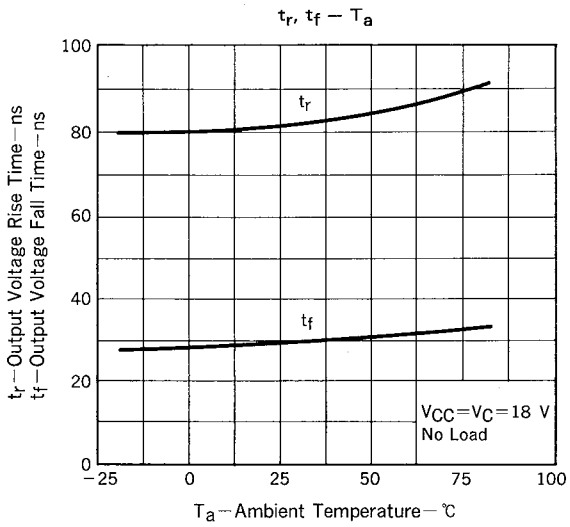

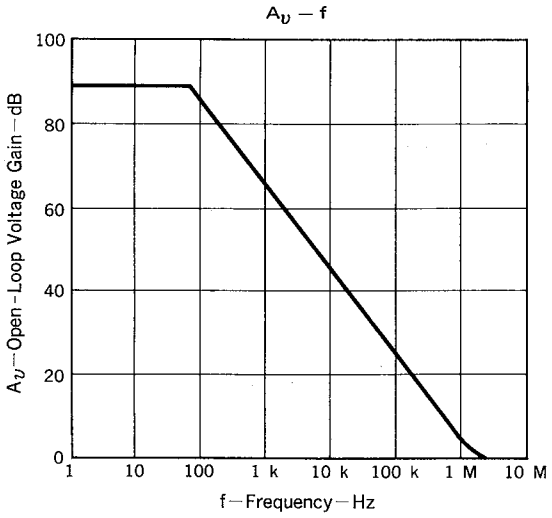

NOTE: When under-shoot voltage at pin 9 occur, it must be cramped to prevent from wrong operation. See Fig. 1.

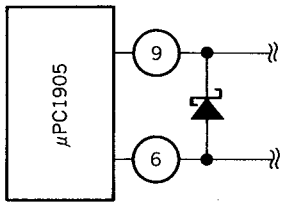

Fig. 1

16PIN PLASTIC DIP (300 mil)

μPC1905CX

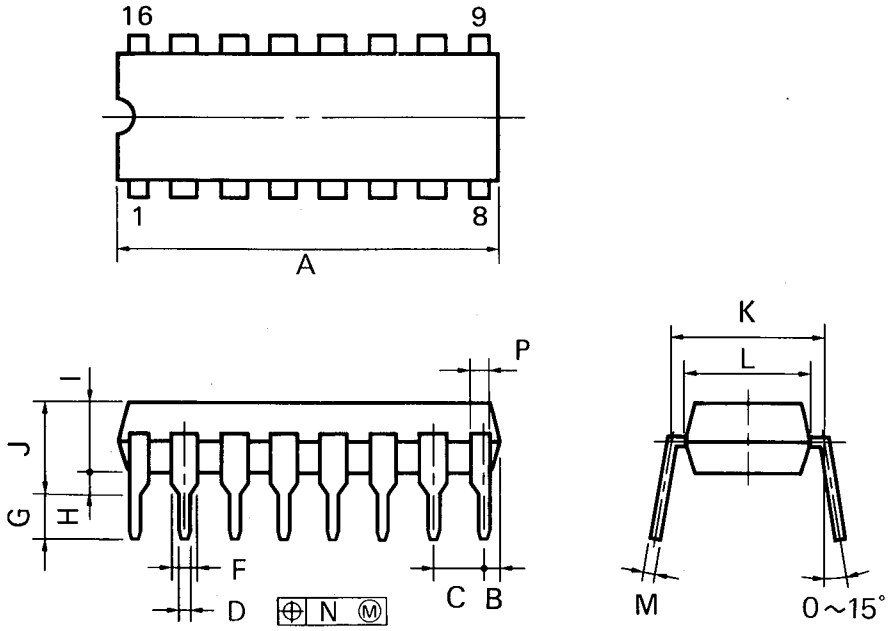

P16C-100-300B

NOTES

1) Each lead centerline is located within 0.25 mm (0.01 inch) of its true position (T.P.) at maximum material condition.

2) Item "K" to center of leads when formed parallel.

ITEM	MILLIMETERS	INCHES
A	20.32 MAX.	0.800 MAX.
B	1.27 MAX.	0.050 MAX.
C	2.54 (T.P.)	0.100 (T.P.)
D	$0.50^{\pm 0.10}$	$0.020^{+0.004}_{-0.005}$
F	1.1 MIN.	0.043 MIN.
G	$3.5^{\pm 0.3}$	$0.138^{\pm 0.012}$
H	0.51 MIN.	0.020 MIN.
I	4.31 MAX.	0.170 MAX.
J	5.08 MAX.	0.200 MAX.
K	7.62 (T.P.)	0.300 (T.P.)
L	6.5	0.256
M	$0.25^{+0.10}_{-0.05}$	$0.010^{+0.004}_{-0.003}$
N	0.25	0.01
P	1.1 MIN.	0.043 MIN.

16PIN PLASTIC SOP (300 mil)

μPC1905GS

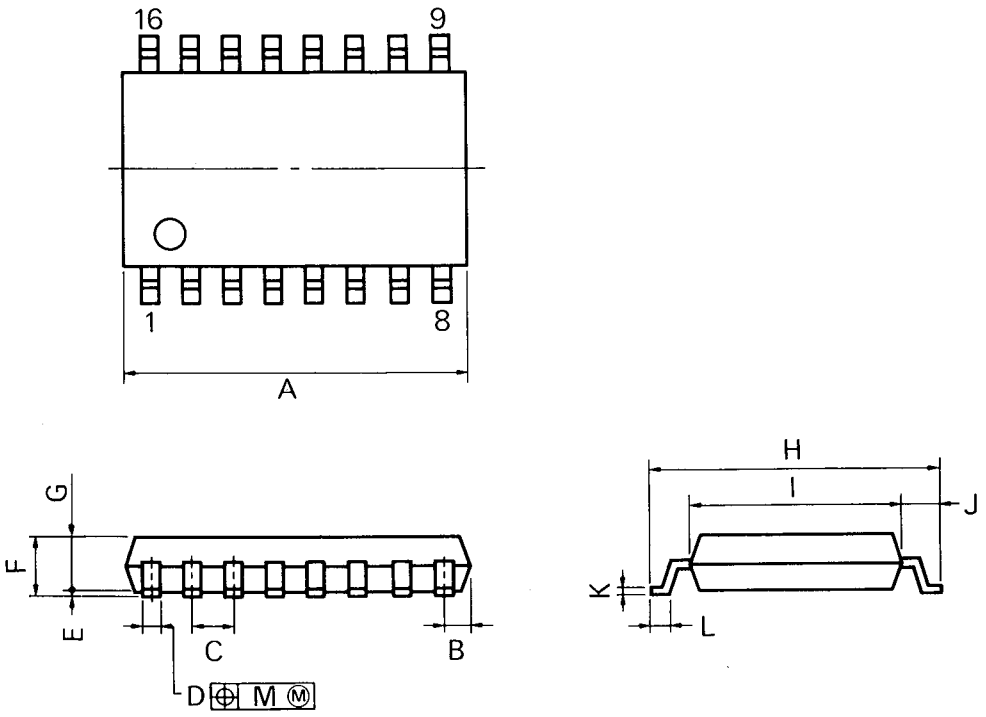

P16GM-50-300B-1

NOTE

Each lead centerline is located within 0.12 mm (0.005 inch) of its true position (T.P.) at maximum material condition.

ITEM	MILLIMETERS	INCHES
A	10.46 MAX.	0.412 MAX.
B	0.78 MAX.	0.031 MAX.
C	1.27 (T.P.)	0.050 (T.P.)
D	$0.40^{+0.10}_{-0.05}$	$0.016^{+0.004}_{-0.003}$
E	0.1 ± 0.1	0.004 ± 0.004
F	1.8 MAX.	0.071 MAX.
G	1.55	0.061
H	7.7 ± 0.3	0.303 ± 0.012
I	5.6	0.220
J	1.1	0.043
K	$0.20^{+0.10}_{-0.05}$	$0.008^{+0.004}_{-0.002}$
L	0.6 ± 0.2	$0.024^{+0.008}_{-0.009}$
M	0.12	0.005

[MEMO]

No part of this document may be copied or reproduced in any form or by any means without the prior written consent of NEC Corporation. NEC Corporation assumes no responsibility for any errors which may appear in this document.

NEC Corporation does not assume any liability for infringement of patents, copyrights or other intellectual property rights of third parties by or arising from use of a device described herein or any other liability arising from use of such device. No license, either express, implied or otherwise, is granted under any patents, copyrights or other intellectual property rights of NEC Corporation or others.

The devices listed in this document are not suitable for use in the field where very high reliability is required including, but not limited to, aerospace equipment, submarine cables, nuclear reactor control systems and life support systems. If customers intend to use NEC devices for above applications or othose intend to use "Standard" quality grade NEC devices for the application not intended by NEC, please contact our sales people in advance.

Application examples recommended by NEC Corporation

Standard: Data processing and office equipment, Communication equipment (terminal, mobile), Test and Measurement equipment, Audio and Video equipment, Other consumer products, Industrial robots, etc.

Special: Automotive and Transportation equipment, Communication equipment (trunk line), Train and Traffic control devices, Burning control systems, antidisaster systems, anticrime systems etc.

ENTEGRECİ

Bu belge www.entegreci.com üzerinden sunulmaktadır.

Elektronik komponent tedarikinde Entegreci

Entegreci, Eskişehir merkezli, Türkiye geneline satış yapan bir elektronik komponent mağazasıdır. Entegreler (IC), mikrodenetleyiciler, transistörler, diyotlar, pasif elemanlar, konnektörler, modüller ve geliştirme kartları tek adetten seri üretim adetlerine kadar satılır. Ürün sayfalarında güncel stok durumunu, fiyatı ve datasheet bağlantısını bulabilirsiniz.

Parça koduyla arama

Üretici parça numarasını yazın; stok ve fiyatı hemen görün.

www.entegreci.com

Ürün kategorileri

Entegreden kapasitöre tüm elektronik komponent kategorileri.

Kategorilere göz atın

Üreticiler

Aradığınız üreticinin ürünlerini tek sayfada inceleyin.

Üreticileri görün

Toplu alım ve teklif

Listede olmayan ya da yüksek adetli parçalar için teklif isteyin.

Teklif isteyin

www.entegreci.com | **destek@entegreci.com** | **0850 305 90 34**

Entegreci is an online electronic components store based in Türkiye. Search by manufacturer part number to see stock, prices and datasheets for integrated circuits, microcontrollers, transistors, passive components and connectors, or request a quote for parts that are not listed.

Bu sayfa Entegreci tarafından eklenmiştir. Belgenin önceki sayfaları asıl yayıncısına aittir ve içeriği değiştirilmemiştir; en güncel sürüm için belgenin yayıncısına başvurun.