Tape and Packing

Product	Transistor / MOSFET	Package	SOT-323 (UMT3)	Type	T106

1. Components description (Only for reference)

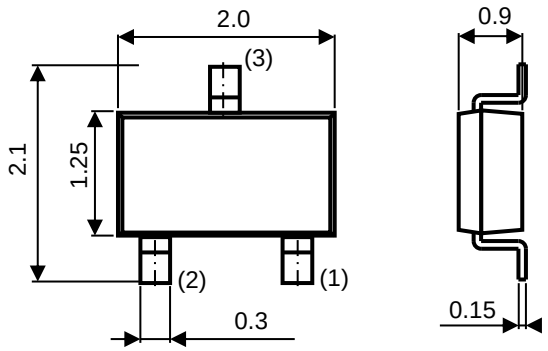

Unit : mm

2. Taping dimensions

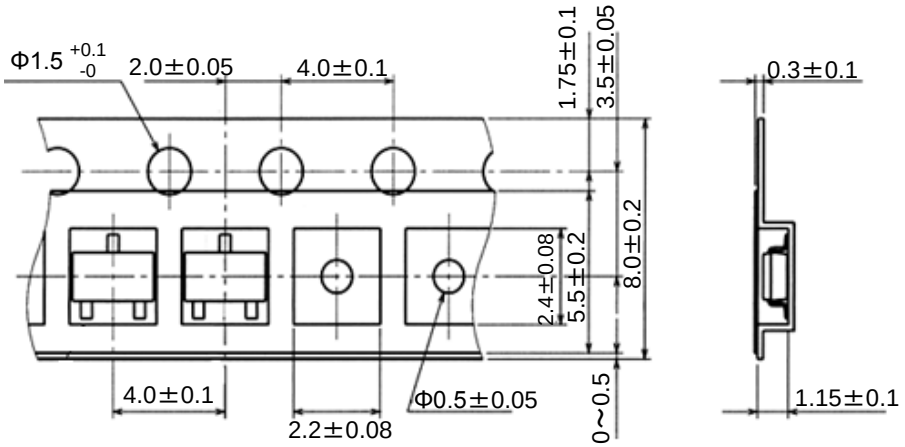

Unit : mm

Note) Feed holes might be cover with the adhesive tape, but nothing will affect for using by that.

3. Tape and packing specification

3-1. Direction of tape winding

Connection (3) comes to feeding hole side. The direction shall be one in a reel.

3-2. Cumulative pitch tolerance

The cumulative pitch tolerance of the mold for producing the carrier tape shall be within ±0.2mm per 10pitches.

3-3. The minimum radius to bend the carrier tape

Carrier tape shall be flexible enough to protect from no component and damage under a minimum radius of 30mm. However it shall be defined only inside of carrier tape.

3-4. The material of carrier tape

Special carbon paints are coated both sides of polystyrene.

3-5. Failure Rate

	Incidence	Remark
Continuous missing	0%	Except leader and trail portion
Discontinuous missing	Max.0.1%／reel	

©2016 ROHM Co., Ltd. All rights reserved

4. Reeling specification

4-1. Leading direction

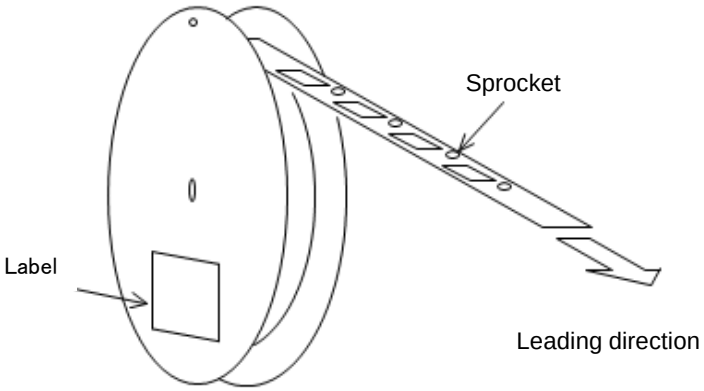

4-2. Leader

Leader tape shall be separated into two parts-an adhesive tape at first part and carrier tape without products.

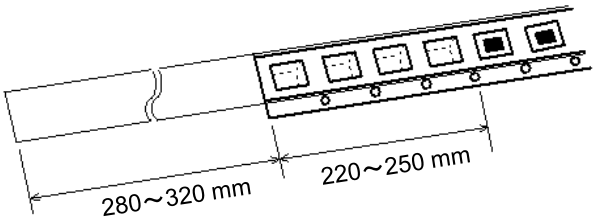

4-3. Trail

Trail tape shall remain with no product and trail tape shall not be stuck directly on a reel.

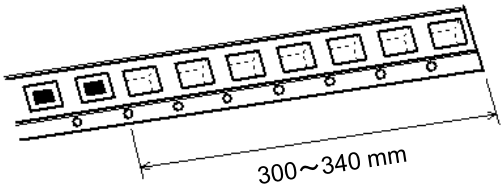

5. Treatment for end of tape

The end of leader tape shall be fixed with the white adhesive tape.

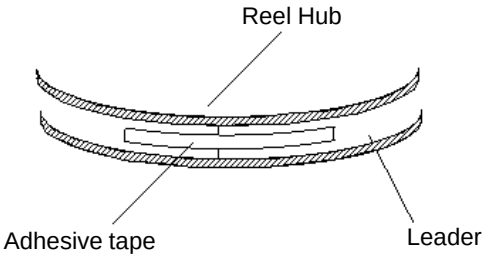

©2016 ROHM Co., Ltd. All rights reserved

6. Quantity

3,000 pcs / reel

7. Reel dimensions

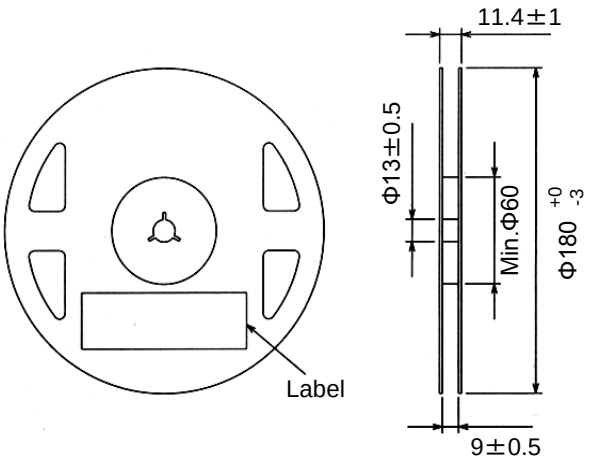

Unit : mm

8. Marking

Each reel shall be legibly marked with the following items.

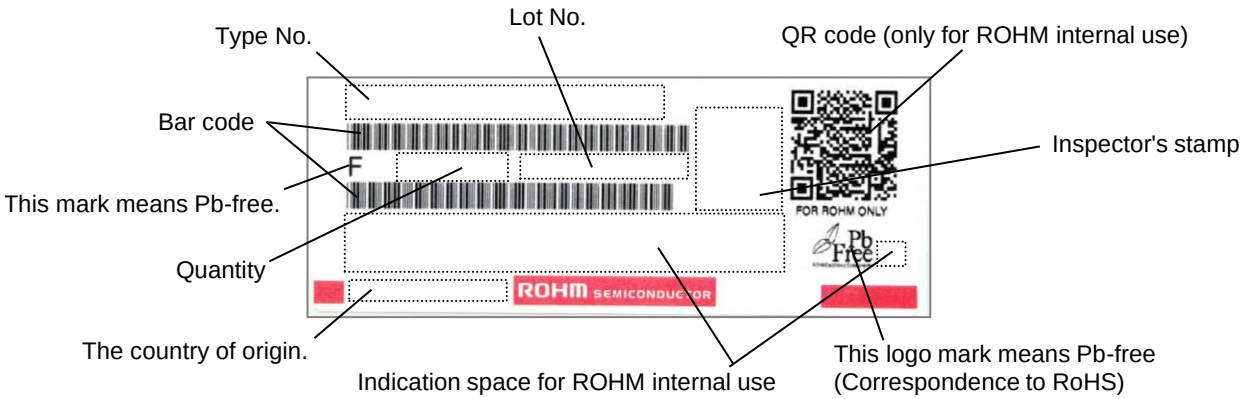

9. Type

Product code of taping shall be composed as indicated below.

Ex. 2SC4081 □ T106 R
① ② ③ ④

DTC144EUA □ T106
① ② ③

① Type code

② Symbol of additional ability

③ Taping code

④ hFE rank

©2016 ROHM Co., Ltd. All rights reserved

10. Taping Peeling Strength

Peeling strength : 0.1N～1.0N（If products have stored over our recommended storage condition.）

【Test condition（Based on JIS C 0806-3）】
Pull direction at angle from 165°to 180°and pull the seal tape with the speed of 300mm/min±10mm/min.

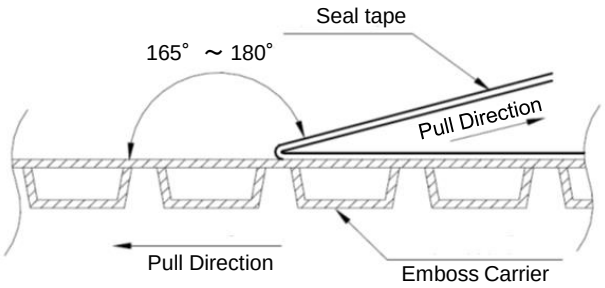

11. Recommended storage condition

Recommended storage condition :

Temperature 5℃ - 40℃, Humidity 30%RH - 80%RH

Recommended storage time period :

・Dipped SMD products（Sn3Ag0.5Cu）: One year after production

・Plated SMD products（Sn2Cu or Sn100%）: Five years after production

Notes）It is strongly recommended to confirm solderability before using products of which storage time is exceeding recommended storage time period.

12. Package

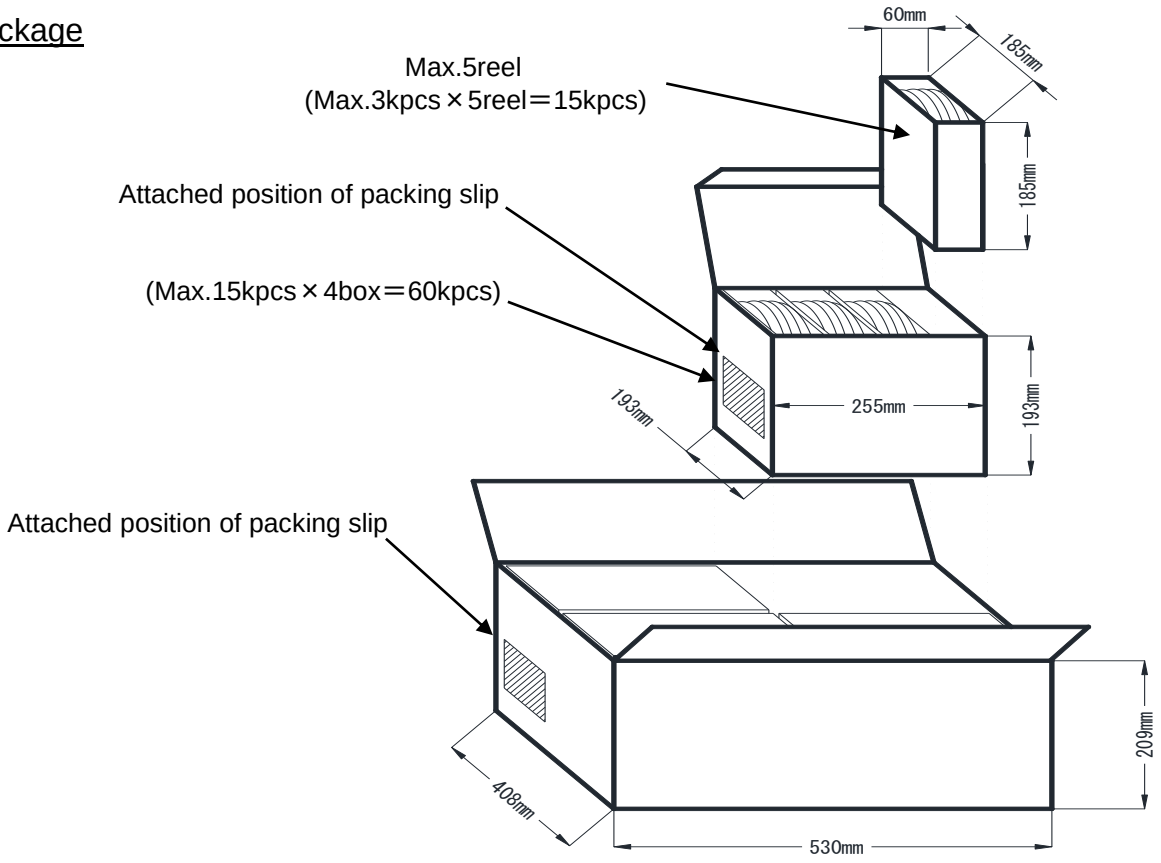

©2016 ROHM Co., Ltd. All rights reserved

Notes

1) The information contained herein is subject to change without notice.

2) Before you use our Products, please contact our sales representative and verify the latest specifications :

3) Although ROHM is continuously working to improve product reliability and quality, semiconductors can break down and malfunction due to various factors.
Therefore, in order to prevent personal injury or fire arising from failure, please take safety measures such as complying with the derating characteristics, implementing redundant and fire prevention designs, and utilizing backups and fail-safe procedures. ROHM shall have no responsibility for any damages arising out of the use of our Poducts beyond the rating specified by ROHM.

4) Examples of application circuits, circuit constants and any other information contained herein are provided only to illustrate the standard usage and operations of the Products. The peripheral conditions must be taken into account when designing circuits for mass production.

5) The technical information specified herein is intended only to show the typical functions of and examples of application circuits for the Products. ROHM does not grant you, explicitly or implicitly, any license to use or exercise intellectual property or other rights held by ROHM or any other parties. ROHM shall have no responsibility whatsoever for any dispute arising out of the use of such technical information.

6) The Products are intended for use in general electronic equipment (i.e. AV/OA devices, communication, consumer systems, gaming/entertainment sets) as well as the applications indicated in this document.

7) The Products specified in this document are not designed to be radiation tolerant.

8) For use of our Products in applications requiring a high degree of reliability (as exemplified below), please contact and consult with a ROHM representative : transportation equipment (i.e. cars, ships, trains), primary communication equipment, traffic lights, fire/crime prevention, safety equipment, medical systems, servers, solar cells, and power transmission systems.

9) Do not use our Products in applications requiring extremely high reliability, such as aerospace equipment, nuclear power control systems, and submarine repeaters.

10) ROHM shall have no responsibility for any damages or injury arising from non-compliance with the recommended usage conditions and specifications contained herein.

11) ROHM has used reasonable care to ensur the accuracy of the information contained in this document. However, ROHM does not warrants that such information is error-free, and ROHM shall have no responsibility for any damages arising from any inaccuracy or misprint of such information.

12) Please use the Products in accordance with any applicable environmental laws and regulations, such as the RoHS Directive. For more details, including RoHS compatibility, please contact a ROHM sales office. ROHM shall have no responsibility for any damages or losses resulting non-compliance with any applicable laws or regulations.

13) When providing our Products and technologies contained in this document to other countries, you must abide by the procedures and provisions stipulated in all applicable export laws and regulations, including without limitation the US Export Administration Regulations and the Foreign Exchange and Foreign Trade Act.

14) This document, in part or in whole, may not be reprinted or reproduced without prior consent of ROHM.

ROHM SEMICONDUCTOR

Thank you for your accessing to ROHM product informations.
More detail product informations and catalogs are available, please contact us.

ROHM Customer Support System

http://www.rohm.com/contact/

© 2015 ROHM Co., Ltd. All rights reserved.

ENTEGRECİ

Bu belge www.entegreci.com üzerinden sunulmaktadır.

Elektronik komponent tedarikinde Entegreci

Entegreci, Eskişehir merkezli, Türkiye geneline satış yapan bir elektronik komponent mağazasıdır. Entegreler (IC), mikrodenetleyiciler, transistörler, diyotlar, pasif elemanlar, konnektörler, modüller ve geliştirme kartları tek adetten seri üretim adetlerine kadar satılır. Ürün sayfalarında güncel stok durumunu, fiyatı ve datasheet bağlantısını bulabilirsiniz.

Parça koduyla arama

Üretici parça numarasını yazın; stok ve fiyatı hemen görün.

www.entegreci.com

Ürün kategorileri

Entegreden kapasitöre tüm elektronik komponent kategorileri.

Kategorilere göz atın

Üreticiler

Aradığınız üreticinin ürünlerini tek sayfada inceleyin.

Üreticileri görün

Toplu alım ve teklif

Listede olmayan ya da yüksek adetli parçalar için teklif isteyin.

Teklif isteyin

www.entegreci.com | **destek@entegreci.com** | **0850 305 90 34**

Entegreci is an online electronic components store based in Türkiye. Search by manufacturer part number to see stock, prices and datasheets for integrated circuits, microcontrollers, transistors, passive components and connectors, or request a quote for parts that are not listed.

Bu sayfa Entegreci tarafından eklenmiştir. Belgenin önceki sayfaları asıl yayıncısına aittir ve içeriği değiştirilmemiştir; en güncel sürüm için belgenin yayıncısına başvurun.