UF840K-MTQ

Power MOSFET

8A, 500V N-CHANNEL POWER MOSFET

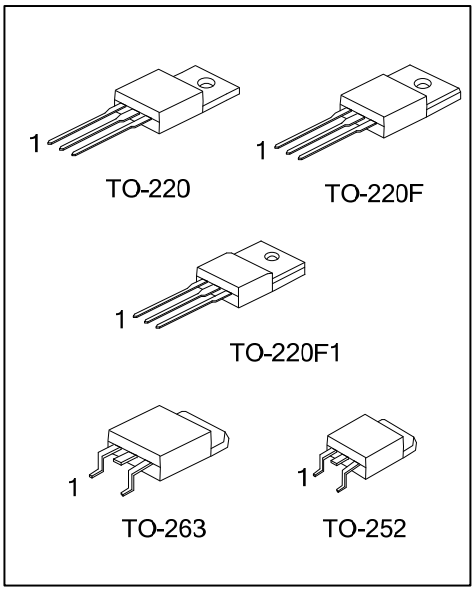

■ DESCRIPTION

The N-Channel enhancement mode silicon gate power MOSFET is designed for high voltage, high speed power switching applications such as switching regulators, switching converters, solenoid, motor drivers, relay drivers.

■ FEATURES

* Low $R_{DS(ON)}$< 0.87Ω @ V_{GS}=10V. I_D = 4.4A
* Single Pulse Avalanche Energy Rated
* Fast Switching Speeds
* Linear Transfer Characteristics
* High Input Impedance

■ SYMBOL

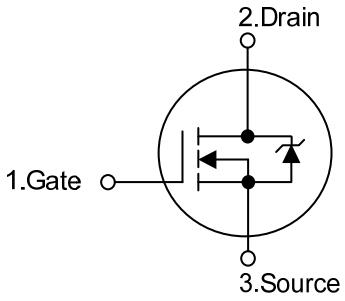

■ ORDERING INFORMATION

Ordering Number		Package	Pin Assignment			Packing
Lead Free	Halogen-Free		1	2	3	
UF840KL-TA3-R	UF840KG-TA3-R	TO-220	G	D	S	Tube
UF840KL-TF3-R	UF840KG-TF3-R	TO-220F	G	D	S	Tube
UF840KL-TF1-T	UF840KG-TF1-T	TO-220F1	G	D	S	Tube
UF840KL-TN3-R	UF840KG-TN3-R	TO-252	G	D	S	Tape Reel
UF840KL-TQ2-T	UF840KG-TQ2-T	TO-263	G	D	S	Tube
UF840KL-TQ2-R	UF840KG-TQ2-R	TO-263	G	D	S	Tape Reel

Note: Pin Assignment: G: Gate D: Drain S: Source

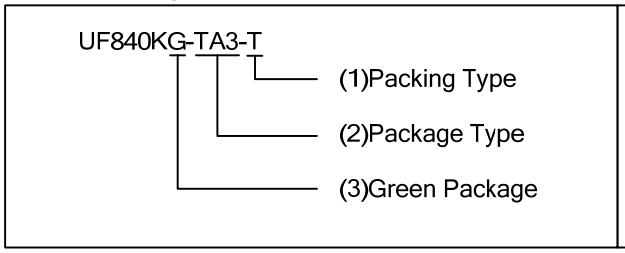

(1) T: Tube, R: Tape Reel

(2) TA3: TO-220, TF3: TO-220F, TF1: TO-220F1, TN3: TO-252, TQ2: TO-263

(3) G: Halogen Free and Lead Free, L: Lead Free

Copyright © 2017 Unisonic Technologies Co., Ltd

■ MARKING

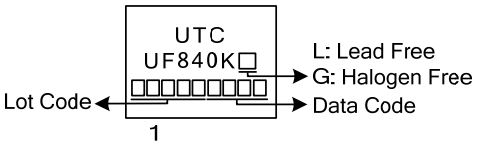

■ ABSOLUTE MAXIMUM RATINGS (T_C = 25°C, unless Otherwise Specified)

PARAMETER		SYMBOL	RATINGS	UNIT
Drain to Source Voltage (T_J =25°C ~125°C)		V_{DSS}	500	V
Drain to Gate Voltage (R_{GS} = 20kΩ, T_J =25°C ~125°C)		V_{DGR}	500	V
Gate to Source Voltage		V_{GSS}	±30	V
Drain Current (Note 2)	Continuous	I_D	8.0	A
	Pulsed	I_{DM}	32	A
Single Pulse Avalanche Energy (Note 3)		E_{AS}	336	mJ
Peak Diode Recovery dv/dt (Note 4)		dv/dt	3.3	V/ns
Power Dissipation	TO-220/TO-263	P_D	134	W
	TO-220F/ TO-220F1		44	W
	TO-252		107	W
Junction Temperature		T_J	+150	°C
Storage Temperature		T_{STG}	-55 ~ +150	°C

Notes: 1. Absolute maximum ratings are those values beyond which the device could be permanently damaged. Absolute maximum ratings are stress ratings only and functional device operation is not implied.
2. Repetitive Rating: Pulse width limited by maximum junction temperature.
3. L = 10mH, I_{AS} = 8.0A, V_{DD} = 50V, R_G = 25Ω, Starting T_J = 25°C.
4. I_{SD} ≤ 8.0A, di/dt ≤ 200A/μs, V_{DD} ≤ BV_{DSS}, Starting T_J = 25°C.

■ THERMAL RESISTANCES CHARACTERISTICS

PARAMETER		SYMBOL	RATINGS	UNIT
Junction to Ambient	TO-220/TO-220F TO-220F1/TO-263	$θ_{JA}$	62.5	°C/W
	TO-252		110	°C/W
Junction to Case	TO-220/TO-263	$θ_{JC}$	0.93	°C/W
	TO-220F/TO-220F1		2.7	°C/W
	TO-252		1.16	°C/W

■ ELECTRICAL CHARACTERISTICS (T_J =25°C, unless otherwise specified)

PARAMETER		SYMBOL	TEST CONDITIONS	MIN	TYP	MAX	UNIT
OFF CHARACTERISTICS							
Drain-Source Breakdown Voltage		BV_{DSS}	I_D = 250μA, V_{GS} = 0V	500			V
Drain-Source Leakage Current		I_{DSS}	V_{DS}=Rated BV_{DSS}, V_{GS} = 0V			25	μA
Gate-Source Leakage Current	Forward	I_{GSS}	V_{GS}=+30V, V_{DS}=0V			+100	nA
	Reverse		V_{GS}=-30V, V_{DS}=0V			-100	nA
ON CHARACTERISTICS							
Gate Threshold Voltage		$V_{GS(TH)}$	V_{GS}=V_{DS}, I_D = 250μA	2.0		4.0	V
Static Drain-Source On-State Resistance		$R_{DS(ON)}$	V_{GS}=10V. I_D=4.4A			0.87	Ω
DYNAMIC PARAMETERS							
Input Capacitance		C_{ISS}	V_{GS}=0V, V_{DS}=25V, f=1.0MHz		920		pF
Output Capacitance		C_{OSS}			105		pF
Reverse Transfer Capacitance		C_{RSS}			10		pF
SWITCHING PARAMETERS							
Total Gate Charge (Note 1)		Q_G	V_{DS}=400V, V_{GS}=10V, I_D=8A, I_G=10mA (Note 1, 2)		24		nC
Gate to Source Charge		Q_{GS}			3		nC
Gate to Drain Charge		Q_{GD}			2		nC
Turn-on Delay Time (Note 1)		$t_{D(ON)}$	V_{DS}=250V, V_{GS}=10V, I_D=8A, R_G=25Ω (Note 1, 2)		4.8		ns
Rise Time		t_R			11.6		ns
Turn-off Delay Time		$t_{D(OFF)}$			56		ns
Fall-Time		t_F			20		ns
SOURCE- DRAIN DIODE RATINGS AND CHARACTERISTICS							
Maximum Body-Diode Continuous Current		I_S				8	A
Maximum Body-Diode Pulsed Current		I_{SM}				32	A
Drain-Source Diode Forward Voltage (Note 1)		V_{SD}	I_S=8.0A, V_{GS}=0V			2	V
Reverse Recovery Time (Note 1)		t_{rr}	I_S=8.0A, V_{GS}=0V, dI_F/dt=100A/μs		312		nS
Reverse Recovery Charge		Q_{rr}			3.1		μC

Notes: 1. Pulse Test: Pulse width ≤ 300μs, Duty cycle≤2%.
2. Essentially independent of operating temperature.

■ TEST CIRCUITS AND WAVEFORMS

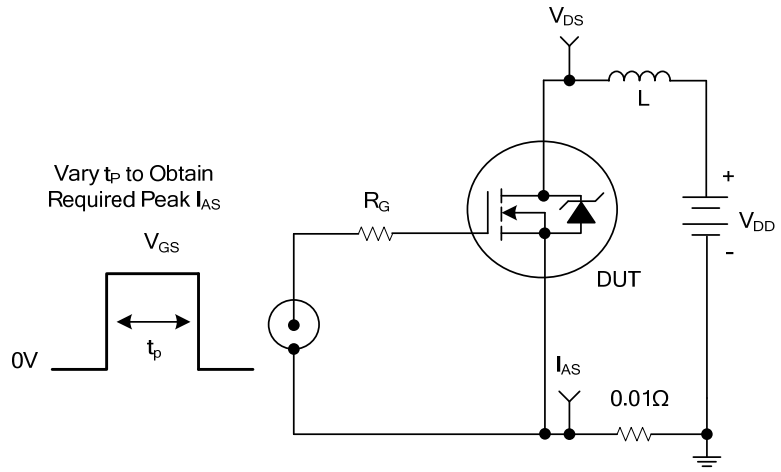

Unclamped Energy Test Circuit

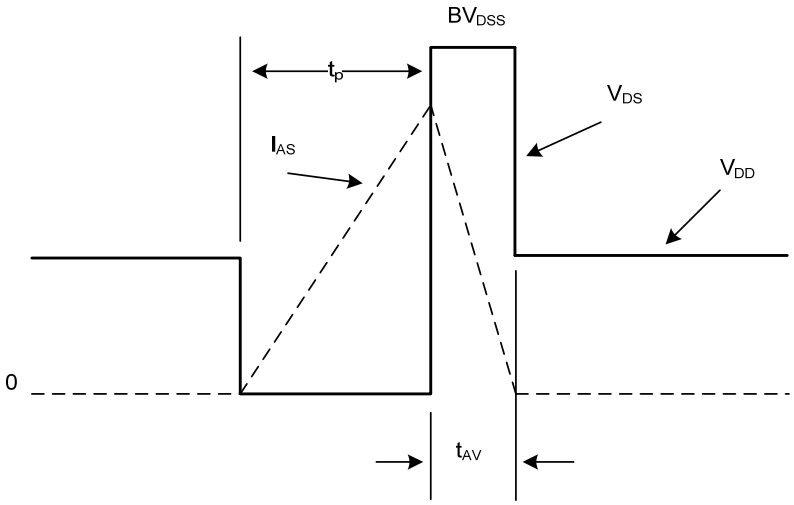

Unclamped Energy Waveforms

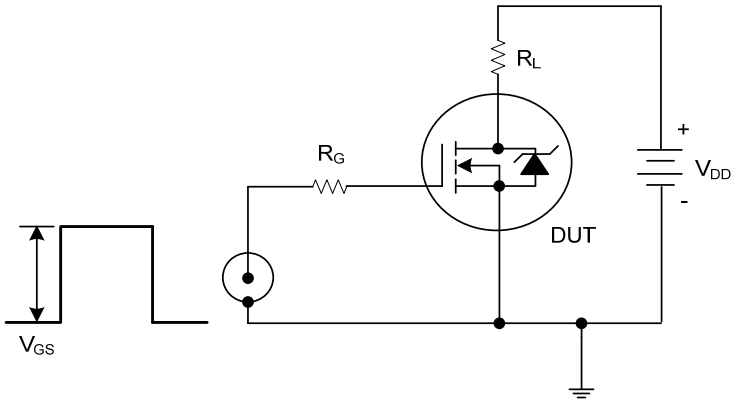

Switching Time Test Circuit

■ TEST CIRCUITS AND WAVEFORMS (Cont.)

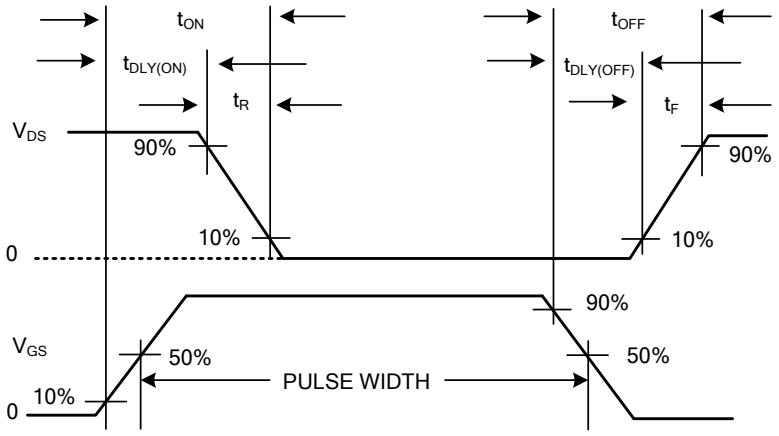

Resistive Switching Waveforms

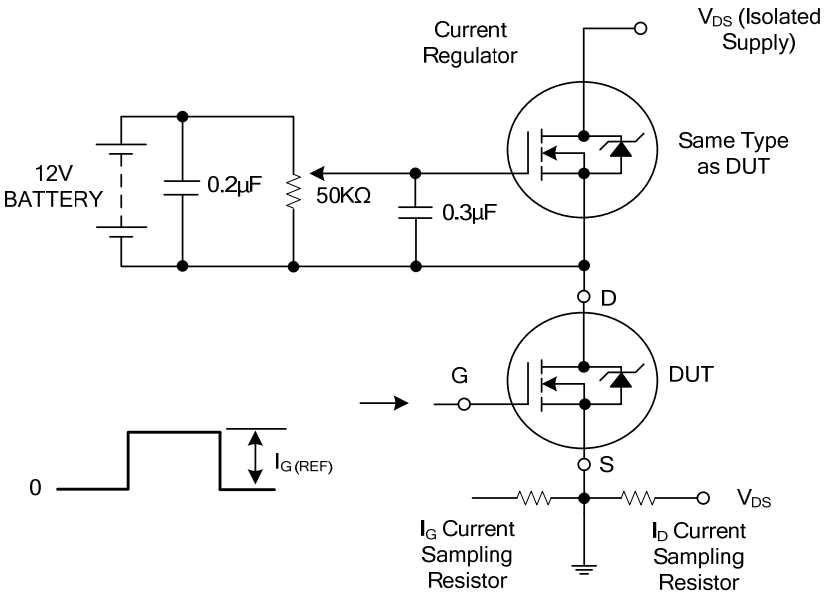

Gate Charge Test Circuit

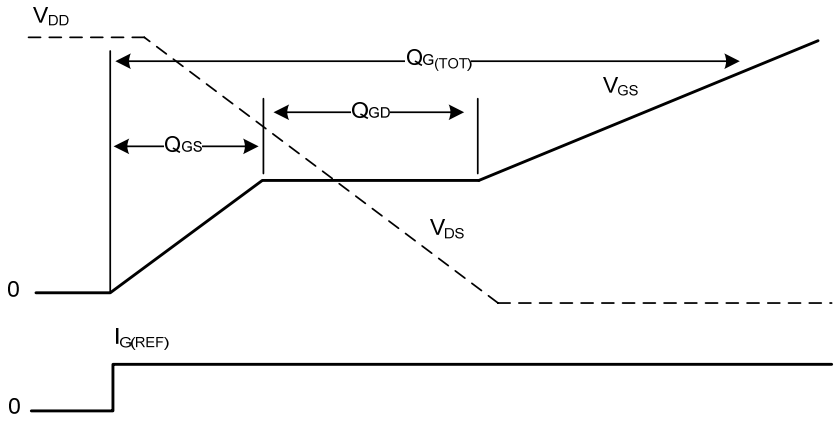

Gate Charge Waveforms

■ TYPICAL CHARACTERISTICS

Normalized Power Dissipation vs. CaseTemperature

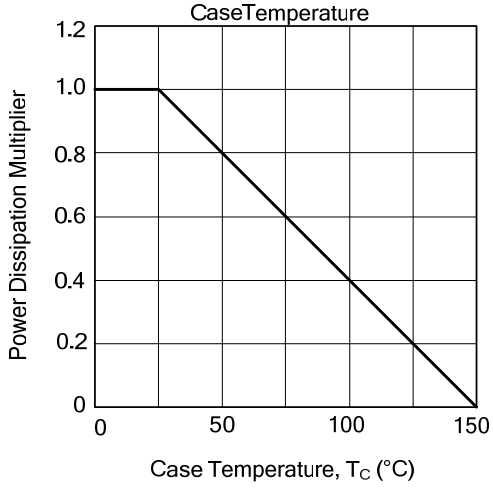

Maximum Contionuous Drain Current vs. Case Temperature

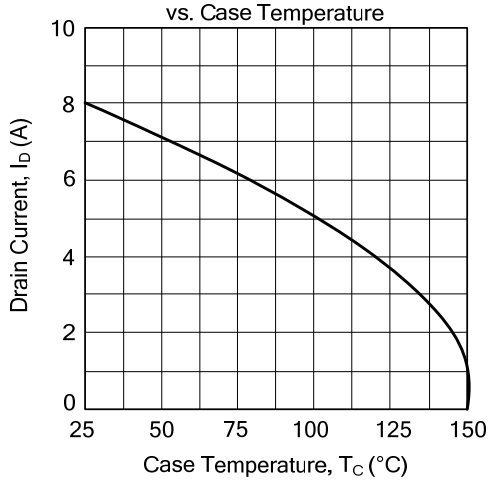

Normalized Maximum Transient Thermal Impedance

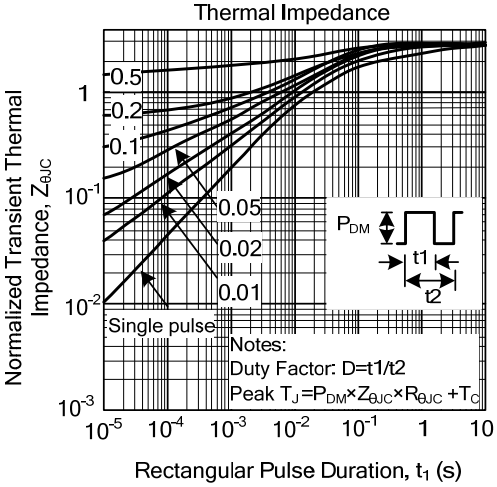

Maximum Safe Operating Area

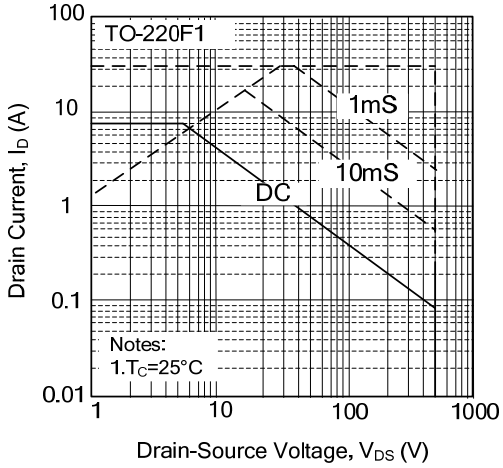

Saturation Characteristics

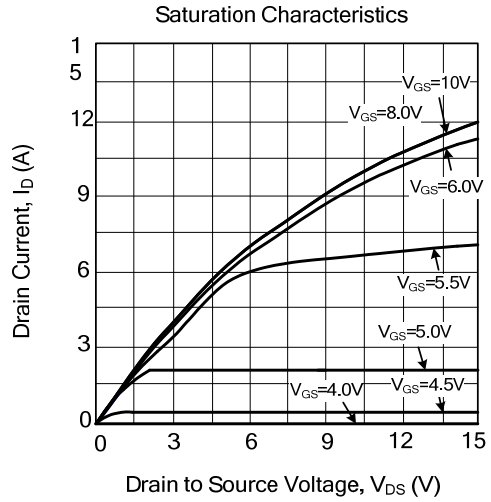

Capacitance vs. Drain to Source Voltage

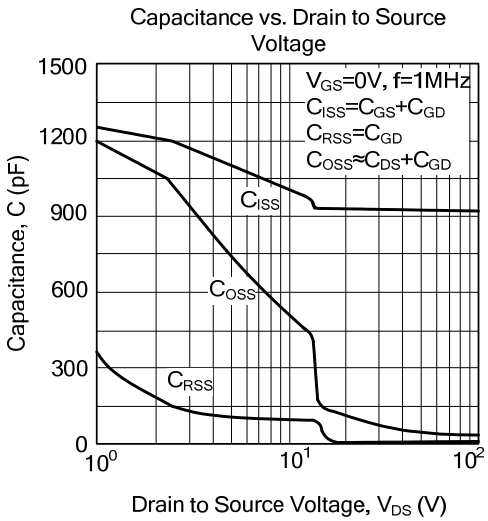

■ TYPICAL CHARACTERISTICS (Cont.)

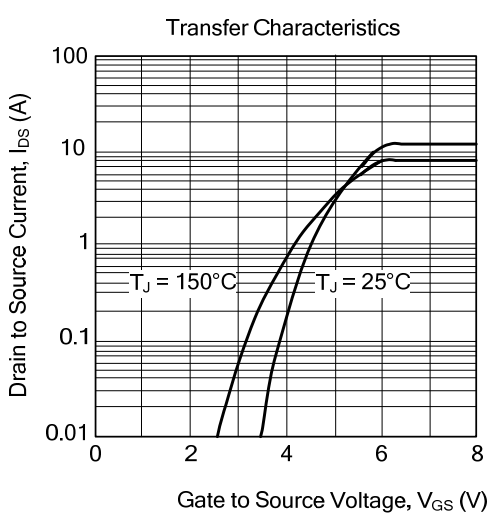

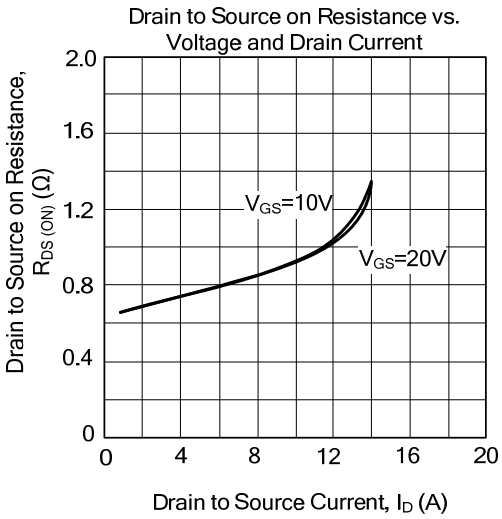

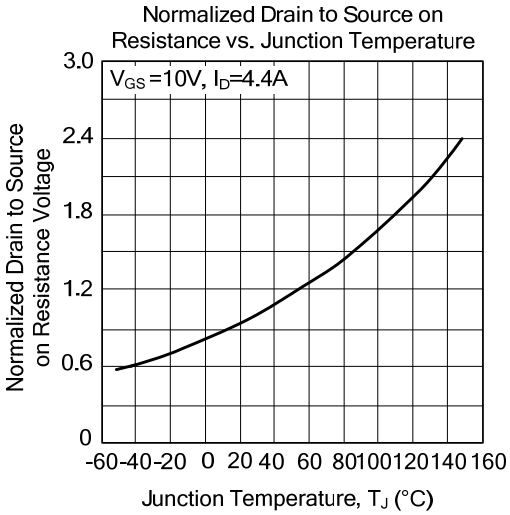

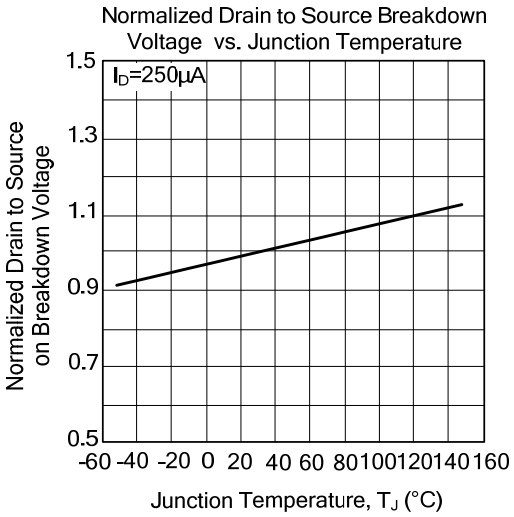

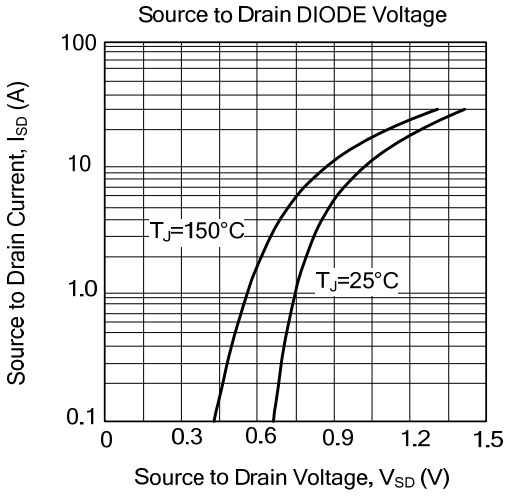

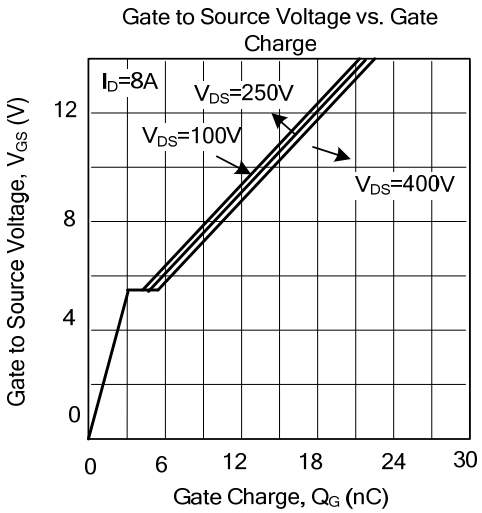

UTC assumes no responsibility for equipment failures that result from using products at values that exceed, even momentarily, rated values (such as maximum ratings, operating condition ranges, or other parameters) listed in products specifications of any and all UTC products described or contained herein. UTC products are not designed for use in life support appliances, devices or systems where malfunction of these products can be reasonably expected to result in personal injury. Reproduction in whole or in part is prohibited without the prior written consent of the copyright owner. The information presented in this document does not form part of any quotation or contract, is believed to be accurate and reliable and may be changed without notice.

ENTEGRECİ

Bu belge www.entegreci.com üzerinden sunulmaktadır.

Elektronik komponent tedarikinde Entegreci

Entegreci, Eskişehir merkezli, Türkiye geneline satış yapan bir elektronik komponent mağazasıdır. Entegreler (IC), mikrodenetleyiciler, transistörler, diyotlar, pasif elemanlar, konnektörler, modüller ve geliştirme kartları tek adetten seri üretim adetlerine kadar satılır. Ürün sayfalarında güncel stok durumunu, fiyatı ve datasheet bağlantısını bulabilirsiniz.

Parça koduyla arama

Üretici parça numarasını yazın; stok ve fiyatı hemen görün.

www.entegreci.com

Ürün kategorileri

Entegreden kapasitöre tüm elektronik komponent kategorileri.

Kategorilere göz atın

Üreticiler

Aradığınız üreticinin ürünlerini tek sayfada inceleyin.

Üreticileri görün

Toplu alım ve teklif

Listede olmayan ya da yüksek adetli parçalar için teklif isteyin.

Teklif isteyin

www.entegreci.com | **destek@entegreci.com** | **0850 305 90 34**

Entegreci is an online electronic components store based in Türkiye. Search by manufacturer part number to see stock, prices and datasheets for integrated circuits, microcontrollers, transistors, passive components and connectors, or request a quote for parts that are not listed.

Bu sayfa Entegreci tarafından eklenmiştir. Belgenin önceki sayfaları asıl yayıncısına aittir ve içeriği değiştirilmemiştir; en güncel sürüm için belgenin yayıncısına başvurun.