4.5A, 500V, 1.5Ω, N-CHANNEL POWER MOSFET

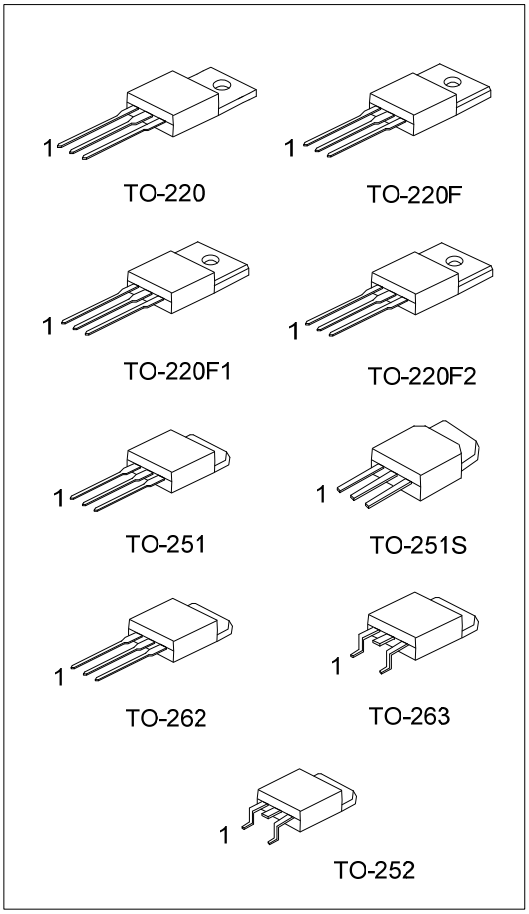

■ DESCRIPTION

The N-Channel enhancement mode silicon gate power MOSFET is designed for high voltage, high speed power switching applications such as switching regulators, switching converters, solenoid, motor drivers, relay drivers.

■ FEATURES

* $R_{DS(ON)}$<1.5Ω @ V_{GS}=10V
* Single Pulse Avalanche Energy Rated
* Rugged- SOA is Power Dissipation Limited
* Fast Switching Speeds
* Linear Transfer Characteristics
* High Input Impedance

■ SYMBOL

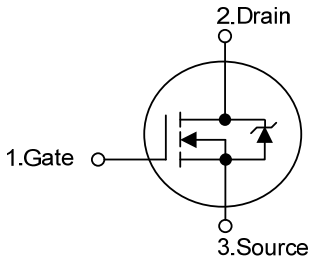

■ ORDERING INFORMATION

Ordering Number		Package	Pin Assignment			Packing
Lead Free	Halogen Free		1	2	3	
UF830L-TA3-T	UF830G-TA3-T	TO-220	G	D	S	Tube
UF830L-TF3-T	UF830G-TF3-T	TO-220F	G	D	S	Tube
UF830L-TF1-T	UF830G-TF1-T	TO-220F1	G	D	S	Tube
UF830L-TF2-T	UF830G-TF2-T	TO-220F2	G	D	S	Tube
UF830L-TM3-T	UF830G-TM3-T	TO-251	G	D	S	Tube
UF830L-TMS-T	UF830G-TMS-T	TO-251S	G	D	S	Tube
UF830L-TN3-R	UF830G-TN3-R	TO-252	G	D	S	Tape Reel
UF830L-T2Q-T	UF830G-T2Q-T	TO-262	G	D	S	Tube
UF830L-TQ2-R	UF830G-TQ2-R	TO-263	G	D	S	Tape Reel
UF830L-TQ2-T	UF830G-TQ2-T	TO-263	G	D	S	Tube

Note: Pin Assignment: G: Gate D: Drain S: Source

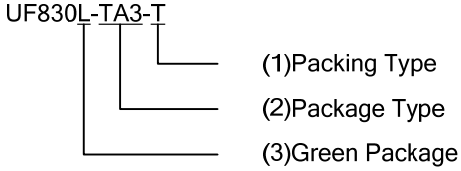

(1) T: Tube, R: Tape Reel
(2) TA3: TO-220, TF3: TO-220F, TF1: TO-220F1
TF2: TO-220F2, TM3: TO-251, TMS: TO-251S
TN3: TO-252, T2Q: TO-262, TQ2: TO-263
(3) L: Lead Free, G: Halogen Free and Lead Free

Copyright © 2015 Unisonic Technologies Co., Ltd

■ MARKING

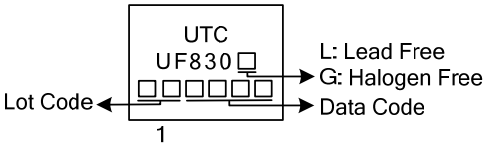

■ ABSOLUTE MAXIMUM RATINGS (T_A = 25°C, Unless Otherwise Specified.)

PARAMETER		SYMBOL	RATINGS	UNIT
Drain to Source Voltage (T_J=25°C ~125°C)		V_{DS}	500	V
Drain to Gate Voltage (R_{GS}=20kΩ, T_J=25°C ~125°C)		V_{DGR}	500	V
Gate to Source Voltage		V_{GS}	±30	V
Drain Current	Continuous	I_D	4.5	A
	Pulsed	I_{DM}	18	A
Power Dissipation (T_C = 25°C)	TO-220/TO-262/TO-263	P_D	73	W
	TO-220F/ TO-220F1		38	W
	TO-220F2		40	
	TO-251/TO-251S TO-252		46	W
Single Pulse Avalanche Energy Rating (Note 2)		E_{AS}	300	mJ
Junction Temperature		T_J	+150	°C
Storage Temperature		T_{STG}	-55 ~ +150	°C

Notes: 1. Absolute maximum ratings are those values beyond which the device could be permanently damaged. Absolute maximum ratings are stress ratings only and functional device operation is not implied.
2. V_{DD}=50V, starting T_J =25°C, L=25mH, R_G=25Ω, peak I_{AS}=4.5A

■ THERMAL DATA

PARAMETER		SYMBOL	RATINGS	UNIT
Junction to Ambient	TO-220/TO-262/TO-263	θ_{JA}	62.5	°C/W
	TO-220F/ TO-220F1		62.5	°C/W
	TO-220F2		62.5	
	TO-251/TO-251S TO-252		100.3	°C/W
Junction to Case	TO-220/TO-262/TO-263	θ_{Jc}	1.71	°C/W
	TO-220F/ TO-220F1		3.31	°C/W
	TO-220F2		3.125	
	TO-251/TO-251S TO-252		2.7	°C/W

■ ELECTRICAL SPECIFICATIONS (T_A =25°C, unless otherwise specified.)

PARAMETER	SYMBOL	TEST CONDITIONS	MIN	TYP	MAX	UNIT
Drain-Source Breakdown Voltage	BV_{DSS}	I_D=250μA, V_{GS}=0V	500			V
Gate Threshold Voltage	$V_{GS(TH)}$	V_{GS}=V_{DS}, I_D=250μA	2.0		4.0	V
On-State Drain Current (Note 1)	$I_{D(ON)}$	V_{DS}>$I_{D(ON)}$×$R_{DS(ON)MAX}$, V_{GS}=10V	4.5			A
Drain-Source Leakage Current	I_{DSS}	V_{DS}= Rated BV_{DSS}, V_{GS}=0V			25	μA
		V_{DS}=0.8×Rated BV_{DSS} V_{GS}=0V, T_J= 125°C			250	μA
Gate-Source Leakage Current	I_{GSS}	V_{GS}=±30V			±100	nA
Static Drain-Source On-State Resistance	$R_{DS(ON)}$	I_D=2.5A, V_{GS}=10V (Note 2)		1.3	1.5	Ω
Forward Transconductance (Note 1)	g_{FS}	V_{DS}≥10V, I_D=2.7A	2.5	4.2		S
Turn-On Delay Time	$t_{D(ON)}$	V_{DD}=250V, I_D≈4.5A R_{GS}=12Ω, R_L =54Ω (Note 2)		10	17	ns
Turn-On Rise Time	t_R			15	23	ns
Turn-Off Delay Time	$t_{D(OFF)}$			33	53	ns
Turn-Off Fall Time	t_F			16	23	ns

Notes: 1. Pulse Test: Pulse width≤300μs, Duty Cycle≤2%.
2. MOSFET Switching Times are Essentially Independent of Operating Temperature.
3. Gate Charge is Essentially Independent of Operating Temperature.

■ ELECTRICAL SPECIFICATIONS(Cont.) (T_A=25°C, unless otherwise specified.)

PARAMETER	SYMBOL	TEST CONDITIONS	MIN	TYP	MAX	UNIT
Total Gate Charge	Q_G	V_{GS}=10V, I_D=4.5A		22	32	nC
Gate-Source Charge	Q_{GS}	V_{DS}=0.8×Rated BV_{DSS}		3.5		nC
Gate-Drain Charge	Q_{GD}	$I_{G(REF)}$=1.5mA (Note 3)		11		nC
Input Capacitance	C_{ISS}	V_{DS}=25V, V_{GS}=0V, f=1.0MHz		600		pF
Output Capacitance	C_{OSS}			100		pF
Reverse Transfer Capacitance	C_{RSS}			20		pF

Notes: 1. Pulse Test: Pulse width≤300μs, Duty Cycle≤2%.
2. MOSFET Switching Times are Essentially Independent of Operating Temperature.
3. Gate Charge is Essentially Independent of Operating Temperature.

■ INTERNAL PACKAGE INDUCTANCE

PARAMETER	SYMBOL	MIN	TYP	MAX	UNIT
Internal Drain Inductance					
Measured from the contact screw on tab to center of die	L_D		3.5		nH
Measured from the drain lead(6mm from package) to center of die			4.5		nH
Internal Source Inductance					
Measured from the source lead(6mm from header) to source bond pad	L_S		7.5		nH

Remark: Modified MOSFET symbol showing the internal devices inductances as below.

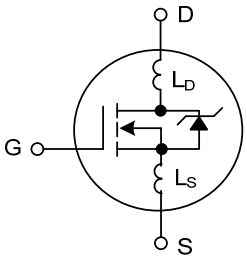

■ SOURCE TO DRAIN DIODE SPECIFICATIONS

PARAMETER	SYMBOL	TEST CONDITIONS	MIN	TYP	MAX	UNIT
Source to Drain Diode Voltage	V_{SD}	T_J=25°C,I_{SD}=4.5A, V_{GS}=0V(Note 1)			1.6	V
Continuous Source to Drain Current	I_{SD}	Note 2			5.5	A
Pulse Source to Drain Current	I_{SDM}				18	A
Reverse Recovery Time	t_{rr}	T_J=25°C, I_{SD}=4.5A, dI/dt=100A/μs	180	350	760	ns
Reverse Recovery Charge	Q_{RR}	T_J=25°C, I_{SD}=4.5A, dI/dt=100A/μs	0.96	2.2	4.3	μC

Notes: 1. Pulse Test: Pulse width≤300μs, Duty Cycle≤2%.
2. Modified MOSFET symbol showing the integral reverse P-N junction diode as below.

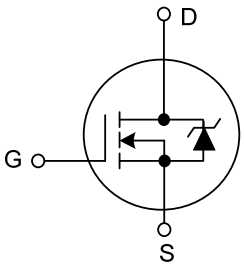

■ TEST CIRCUITS AND WAVEFORMS

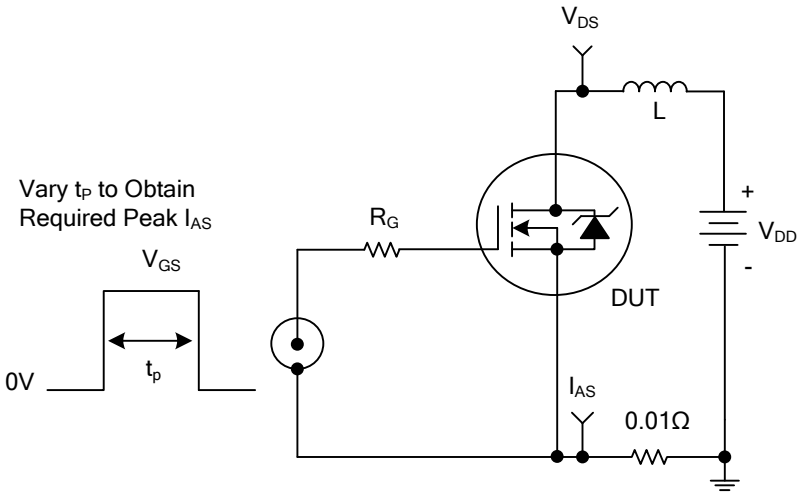

Unclamped Energy Test Circuit

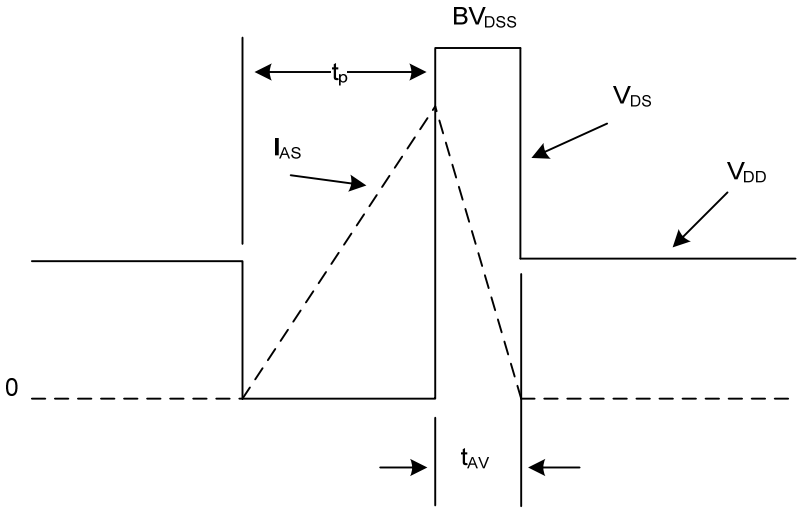

Unclamped Energy Waveforms

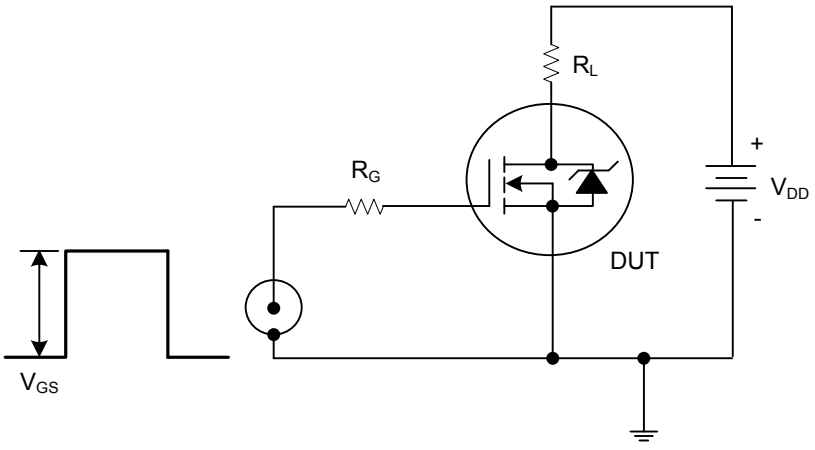

Switching Time Test Circuit

■ TEST CIRCUITS AND WAVEFORMS (Cont.)

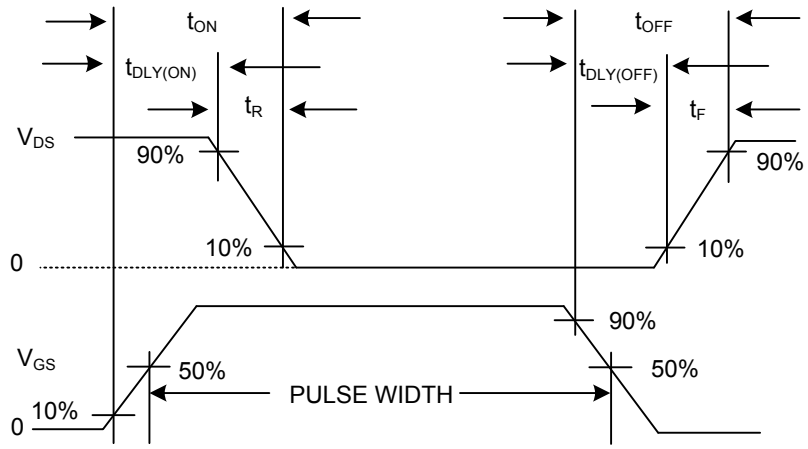

Resistive Switching Waveforms

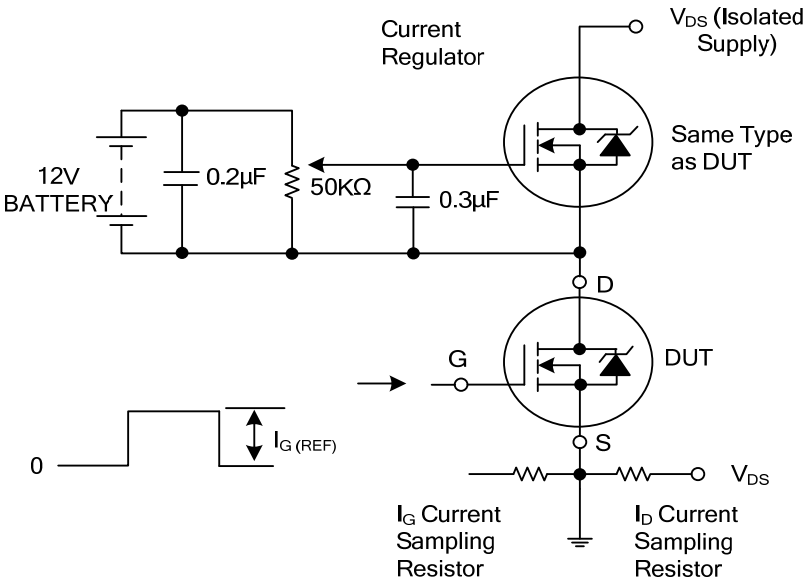

Gate Charge Test Circuit

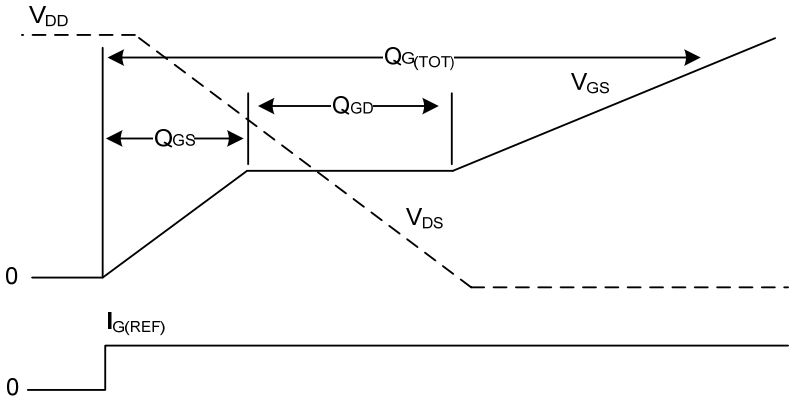

Gate Charge Waveforms

■ TYPICAL CHARACTERISTICS

Normalized Power Dissipation vs. Case Temperature

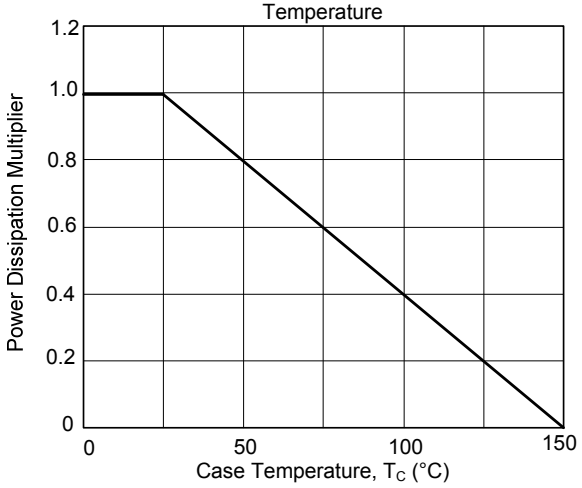

Maximum Contionuous Drain Current vs. Case Temperature

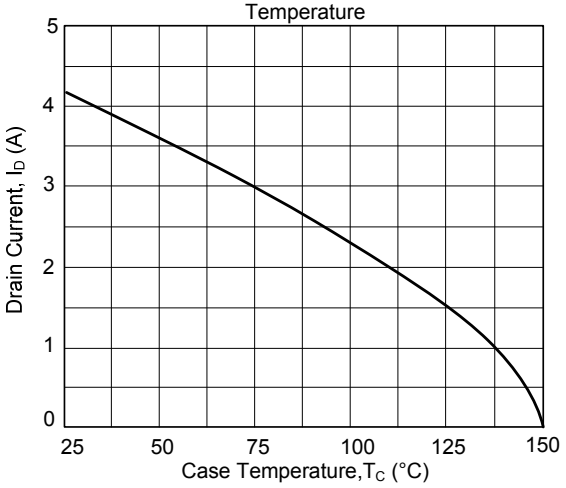

Normalized Maximum Transient Thermal Impedance

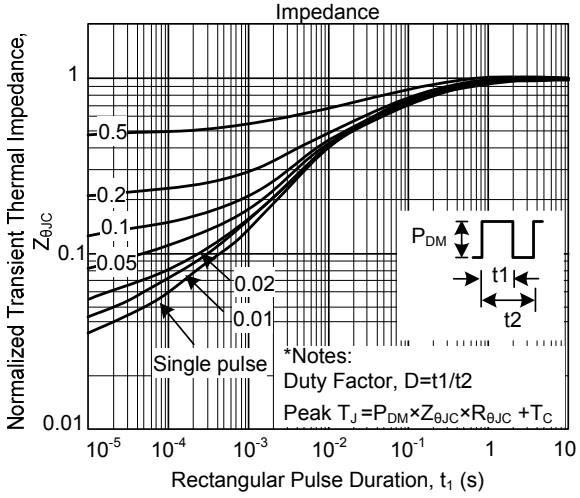

Forward Bias Safe Operating Area

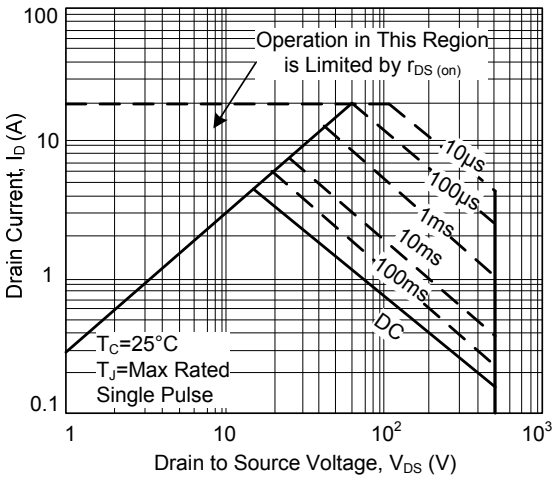

Output Characteristics

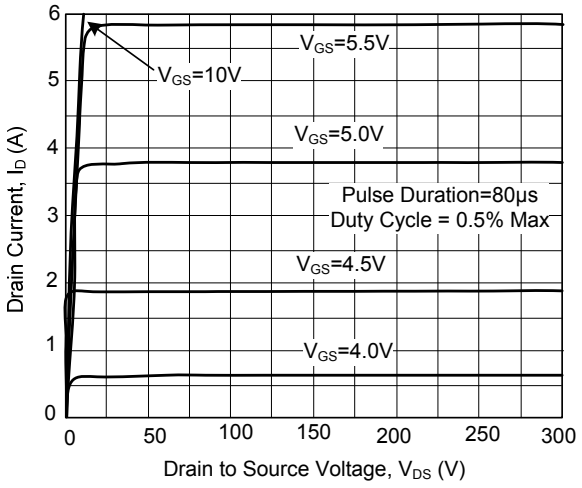

Saturation Characteristics

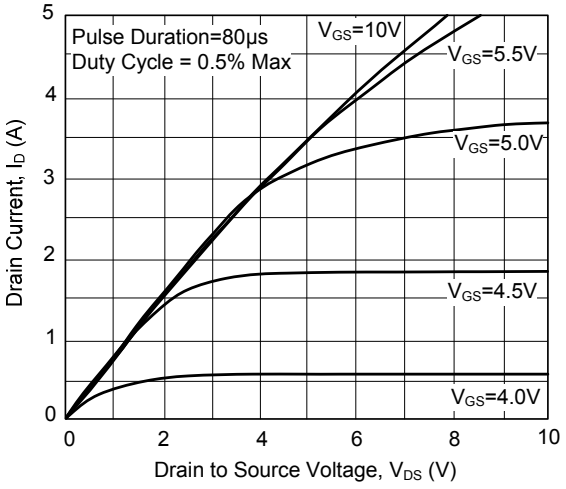

■ TYPICAL CHARACTERISTICS (Cont.)

Transfer Characteristics

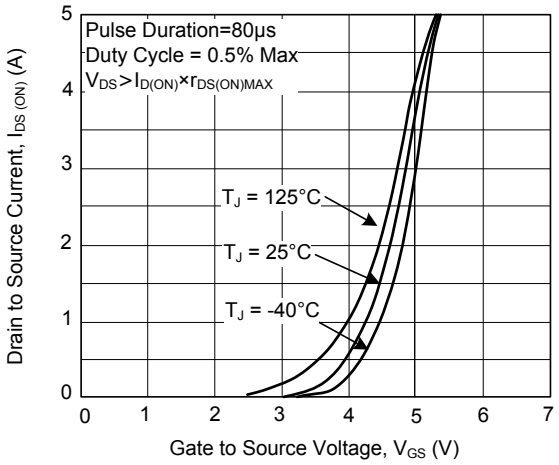

Drain to Source on Resistance vs. Gate Voltage and Drain Current

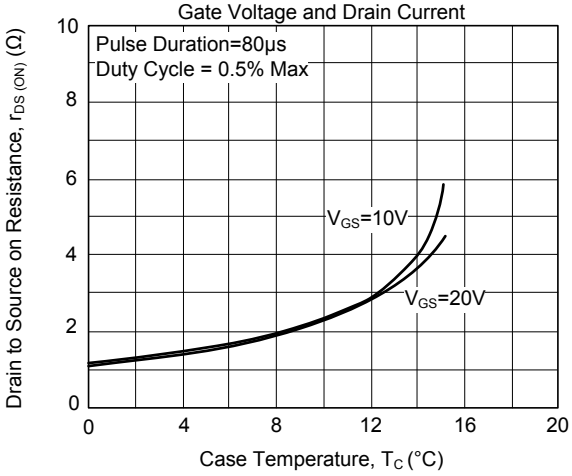

Normalized Drain to Source on Resistance vs. Junction Temperature

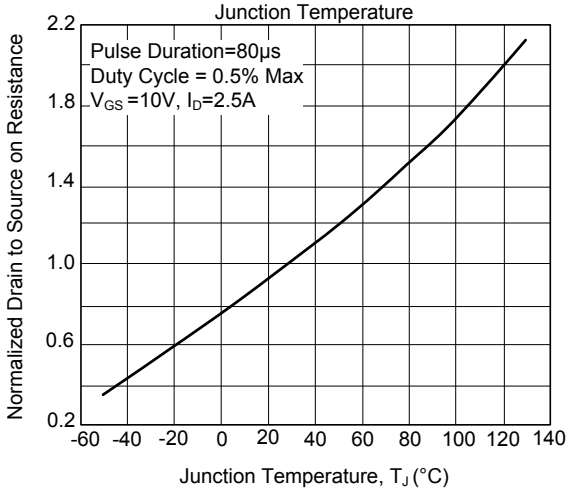

Normalized Drain to Source Breakdown Voltage vs. Junction Temperature

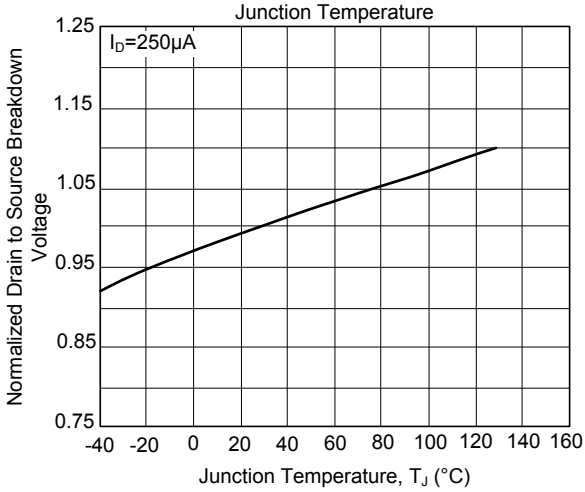

Capacitance vs. Drain to Source Voltage

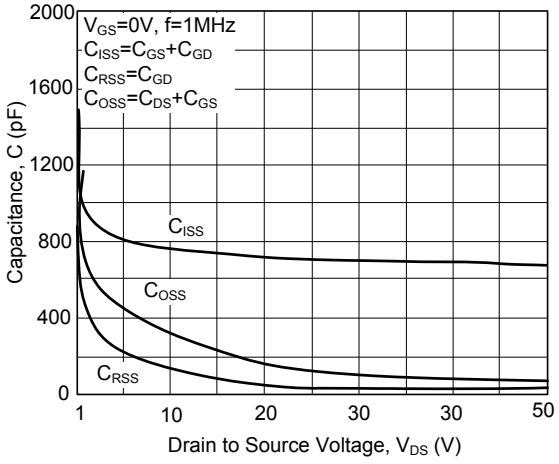

Transconductance vs. Drain Current

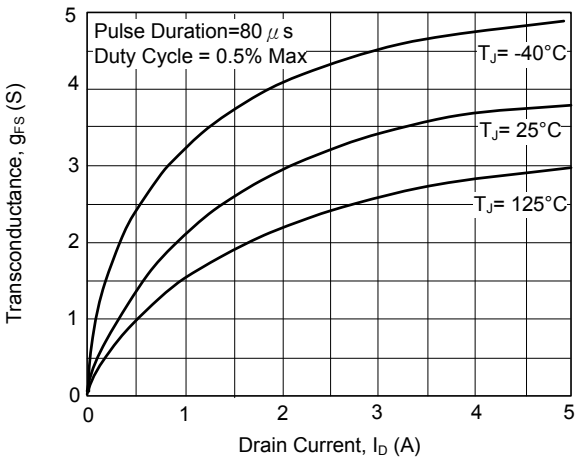

■ TYPICAL CHARACTERISTICS (Cont.)

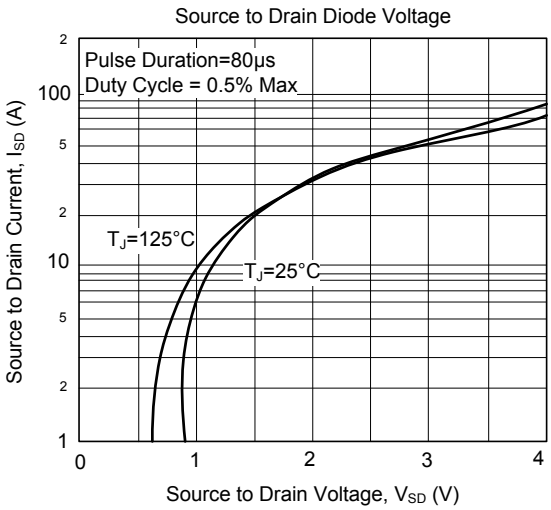

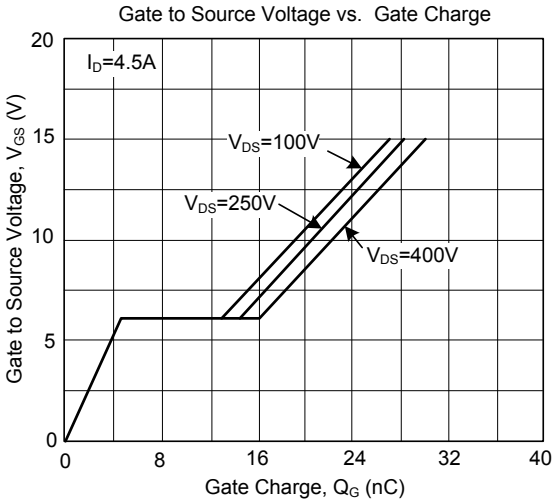

UTC assumes no responsibility for equipment failures that result from using products at values that exceed, even momentarily, rated values (such as maximum ratings, operating condition ranges, or other parameters) listed in products specifications of any and all UTC products described or contained herein. UTC products are not designed for use in life support appliances, devices or systems where malfunction of these products can be reasonably expected to result in personal injury. Reproduction in whole or in part is prohibited without the prior written consent of the copyright owner. The information presented in this document does not form part of any quotation or contract, is believed to be accurate and reliable and may be changed without notice.

ENTEGRECİ

Bu belge www.entegreci.com üzerinden sunulmaktadır.

Elektronik komponent tedarikinde Entegreci

Entegreci, Eskişehir merkezli, Türkiye geneline satış yapan bir elektronik komponent mağazasıdır. Entegreler (IC), mikrodenetleyiciler, transistörler, diyotlar, pasif elemanlar, konnektörler, modüller ve geliştirme kartları tek adetten seri üretim adetlerine kadar satılır. Ürün sayfalarında güncel stok durumunu, fiyatı ve datasheet bağlantısını bulabilirsiniz.

Parça koduyla arama

Üretici parça numarasını yazın; stok ve fiyatı hemen görün.

www.entegreci.com

Ürün kategorileri

Entegreden kapasitöre tüm elektronik komponent kategorileri.

Kategorilere göz atın

Üreticiler

Aradığınız üreticinin ürünlerini tek sayfada inceleyin.

Üreticileri görün

Toplu alım ve teklif

Listede olmayan ya da yüksek adetli parçalar için teklif isteyin.

Teklif isteyin

www.entegreci.com | **destek@entegreci.com** | **0850 305 90 34**

Entegreci is an online electronic components store based in Türkiye. Search by manufacturer part number to see stock, prices and datasheets for integrated circuits, microcontrollers, transistors, passive components and connectors, or request a quote for parts that are not listed.

Bu sayfa Entegreci tarafından eklenmiştir. Belgenin önceki sayfaları asıl yayıncısına aittir ve içeriği değiştirilmemiştir; en güncel sürüm için belgenin yayıncısına başvurun.