UF740

Power MOSFET

10A, 400V, 0.55Ω N-CHANNEL POWER MOSFET

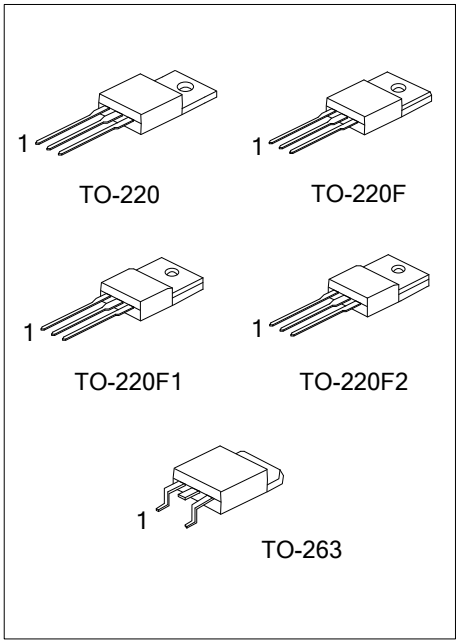

■ DESCRIPTION

The N-Channel enhancement mode silicon gate power MOSFET is designed for high voltage, high speed power switching applications such as switching regulators, switching converters, solenoid, motor drivers, relay drivers.

■ FEATURES

* 10A, 400V, $R_{DS(ON)}$(0.55Ω)
* Single Pulse Avalanche Energy Rated
* Rugged - SOA is Power Dissipation Limited
* Fast Switching Speeds
* Linear Transfer Characteristics
* High Input Impedance

■ SYMBOL

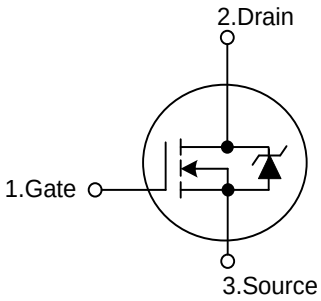

■ ORDERING INFORMATION

Ordering Number		Package	Pin Assignment			Packing
Lead Free	Halogen Free		1	2	3	
UF740L-TA3-T	UF740G-TA3-T	TO-220	G	D	S	Tube
UF740L-TF1-T	UF740G-TF1-T	TO-220F1	G	D	S	Tube
UF740L-TF2-T	UF740G-TF2-T	TO-220F2	G	D	S	Tube
UF740L-TF3-T	UF740G-TF3-T	TO-220F	G	D	S	Tube
UF740L-TQ2-T	UF740G-TQ2-T	TO-263	G	D	S	Tube
UF740L-TQ2-R	UF740G-TQ2-R	TO-263	G	D	S	Tape Reel

Note: Pin Assignment: G: Gate D: Drain S: Source

UF740L-TA3-T
(1)Packing Type
(2)Package Type
(3)Lead Free

(1) R: Tape Reel, T: Tube
(2) TA3: TO-220, TF1: TO-220F1, TF2: TO-220F2, TF3: TO-220F, TQ2: TO-263
(3) L: Lead Free, G: Halogen Free

Copyright © 2013 Unisonic Technologies Co., Ltd

■ ABSOLUTE MAXIMUM RATINGS (T_C = 25°C, Unless Otherwise Specified)

PARAMETER		SYMBOL	RATINGS	UNIT
Drain to Source Voltage (T_J =25°C~125°C)		V_{DS}	400	V
Drain to Gate Voltage (R_{GS} = 20kΩ) (T_J =25°C~125°C)		V_{DGR}	400	V
Gate to Source Voltage		V_{GS}	±20	V
Drain Current	Continuous	I_D	10	A
	T_C = 100°C	I_D	6.3	A
	Pulsed	I_{DM}	40	A
Avalanche Energy	Single Pulsed (Note 3)	E_{AS}	520	mJ
Power Dissipation	TO-220/TO-263	P_D	125	W
	TO-220F/TO-220F1		44	
	TO-220F2		46	
Derating above 25°C	TO-220/TO-263		1.0	W/°C
	TO-220F/TO-220F1		0.35	
	TO-220F2		0.37	
Junction Temperature		T_J	+150	°C
Operating Temperature		T_{OPR}	-55 ~ +150	°C
Storage Temperature		T_{STG}	-55 ~ +150	°C

Note: Absolute maximum ratings are those values beyond which the device could be permanently damaged. Absolute maximum ratings are stress ratings only and functional device operation is not implied.

■ THERMAL DATA

PARAMETER		SYMBOL	RATINGS	UNIT
Junction to Ambient		θ_{JA}	62.5	°C/W
Junction to Case	TO-220/TO-263	θ_{Jc}	1.0	°C/W
	TO-220F/TO-220F1		2.86	
	TO-220F2		2.72	

■ ELECTRICAL CHARACTERISTICS (T_C =25°C, Unless Otherwise Specified.)

PARAMETER	SYMBOL	TEST CONDITIONS	MIN	TYP	MAX	UNIT
Drain to Source Breakdown Voltage	BV_{DSS}	V_{GS} = 0V, I_D = 250μA	400			V
Gate to Threshold Voltage	$V_{GS(THR)}$	V_{GS} = V_{DS}, I_D = 250μA	2.0		4.0	V
On-State Drain Current (Note 1)	$I_{D(ON)}$	V_{DS} >$I_{D(ON)}$ x $R_{DS(ON)MAX}$, V_{GS} =10V	10			A
Zero Gate Voltage Drain Current	I_{DSS}	V_{DS} = Rated BV_{DSS}, V_{GS} = 0V			25	μA
		V_{DS}=0.8 x Rated BV_{DSS}, V_{GS}=0V,T_J=125°C			250	μA
Gate to Source Leakage Current	I_{GSS}	V_{GS} = ±20V			±500	nA
Drain to Source On Resistance	$R_{DS(ON)}$	V_{GS} = 10V, I_D = 5.2A (Note 1)		0.38	0.55	Ω
Forward Transconductance	g_{FS}	V_{DS} ≥ 50V, I_D = 5.2A (Note 1)	5.8	8.9		S
Turn-On Delay Time	$t_{DLY(ON)}$	V_{DD} = 200V, I_D ≈ 10A, R_{GS} = 9.1Ω, R_L = 20Ω, V_{GS} = 10V MOSFET Switching Times are Essentially Independent of Operating Temperature		65	75	ns
Rise Time	t_R			130	145	ns
Turn-Off Delay Time	$t_{DLY(OFF)}$			240	260	ns
Fall Time	t_F			145	155	ns
Total Gate Charge (Gate to Source + Gate to Drain)	$Q_{G(TOT)}$	V_{GS} = 10V, I_D = 10A, $I_{G(REF)}$ = 1.5mA, V_{DS} = 0.8 x Rated BV_{DSS}		138		nC
Gate to Source Charge	Q_{GS}	Gate Charge is Essentially Independent of Operating Temperature		35		nC
Gate to Drain “Miller” Charge	Q_{GD}			35		nC
Input Capacitance	C_{ISS}	V_{GS} = 0V, V_{DS} =25V, f = 1.0MHz		1170		pF
Output Capacitance	C_{OSS}			160		pF
Reverse - Transfer Capacitance	C_{RSS}			26		pF
Internal Drain Inductance	L_D	Measured From the Contact Screw on Tab to Center of Die; Modified MOSFET Symbol Showing the Internal Devices Inductances		3.5		nH
		Measured From the Drain Lead, 6mm (0.25in) From Package to Center of Die		4.5		nH
Internal Source Inductance	L_S	Measured From the Source Lead, 6mm (0.25in) From Header to Source Bonding Pad		7.5		nH
SOURCE TO DRAIN DIODE SPECIFICATIONS						
Source to Drain Diode Voltage	V_{SD}	T_J = 25°C, I_{SD} = 10A, V_{GS} = 0V (Note 1)			2.0	V
Continuous Source to Drain Current	I_S	Modified MOSFET Symbol Showing the Integral Reverse P-N Junction Diode			10	A
Pulse Source to Drain Current (Note 2)	I_{SM}				40	A
Reverse Recovery Time	t_{rr}	T_J = 25°C, I_{SD} = 10A, dI_{SD}/dt = 100A/μs	170	390	790	ns
Reverse Recovery Charge	Q_{RR}	T_J = 25°C, I_{SD} = 10A, dI_{SD}/dt = 100A/μs	1.6	4.5	8.2	μC

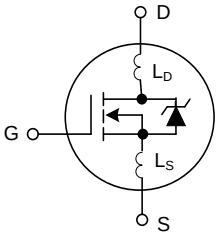

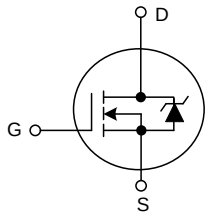

Notes: 1. Pulse Test: Pulse width ≤ 300μs, Duty Cycle≤2%.
2. Repetitive rating: Pulse width limited by maximum junction temperature.
3. V_{DD}=50V, starting T_J =25°C, L=9.1mH, R_G=25Ω, peak I_{AS} = 10A

■ TEST CIRCUITS AND WAVEFORMS

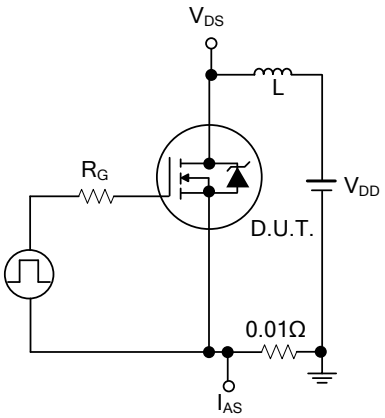

Unclamped Energy Test Circuit

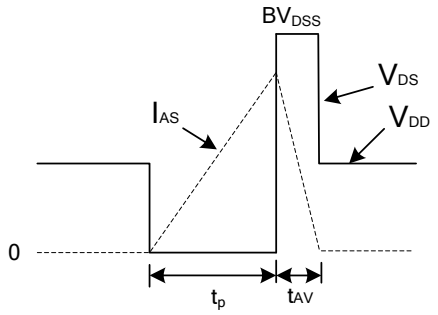

Unclamped Energy Waveforms

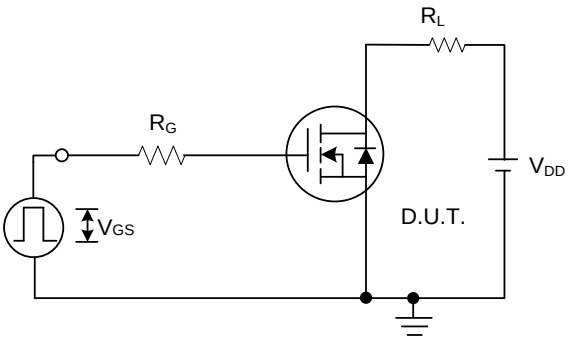

Switching Time Test Circuit

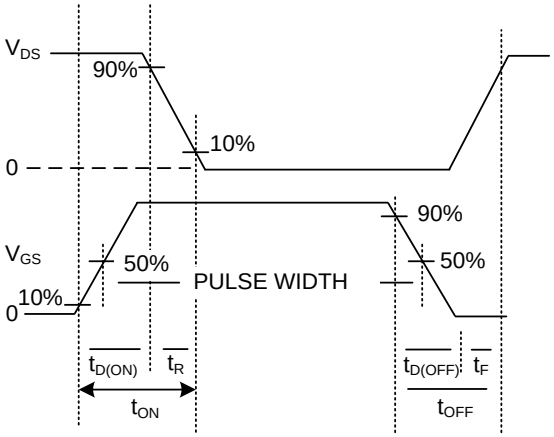

Resistive Switching Waveforms

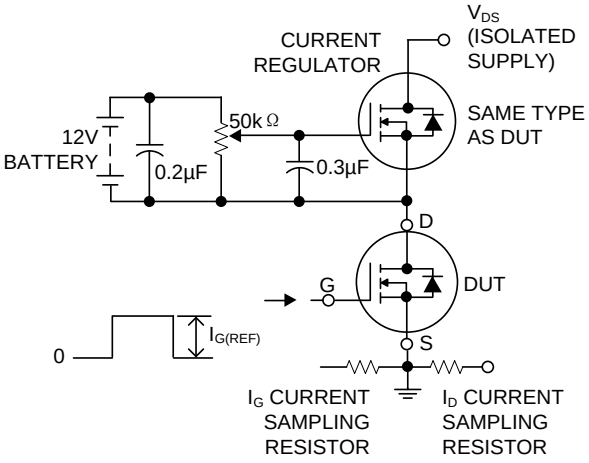

Gate Charge Test Circuit

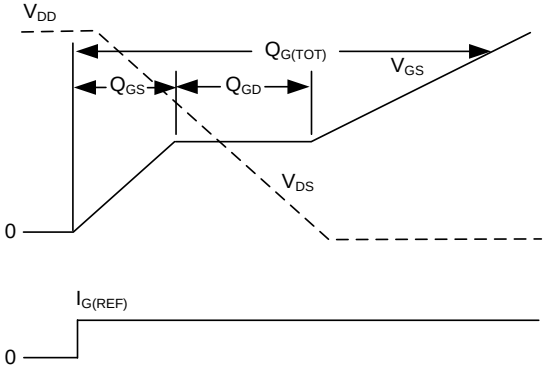

Gate Charge Waveforms

■ TYPICAL PERFORMANCE CUVES

Forward Bias Safe Operating Area

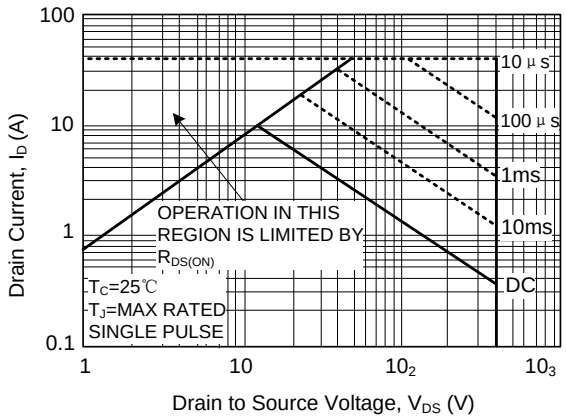

Output Characteristics

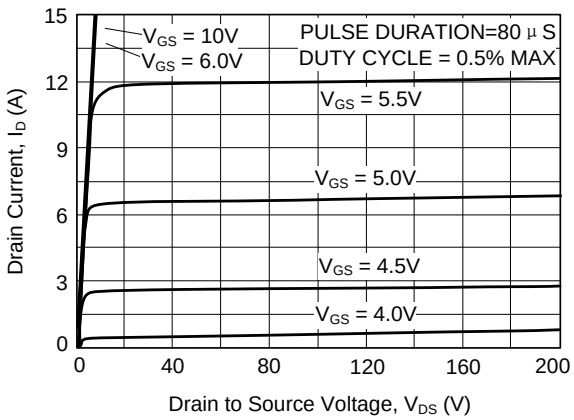

Saturation Characteristics

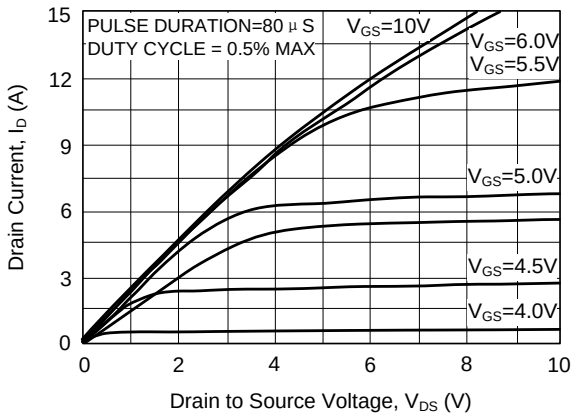

Transfer Characteristics

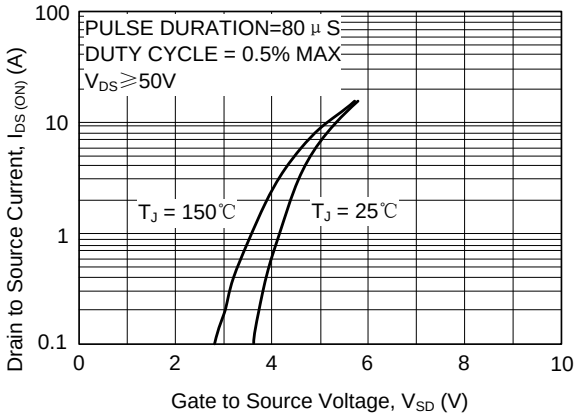

Normalized Drain to Source Breakdown Voltage vs. Junction Temperature

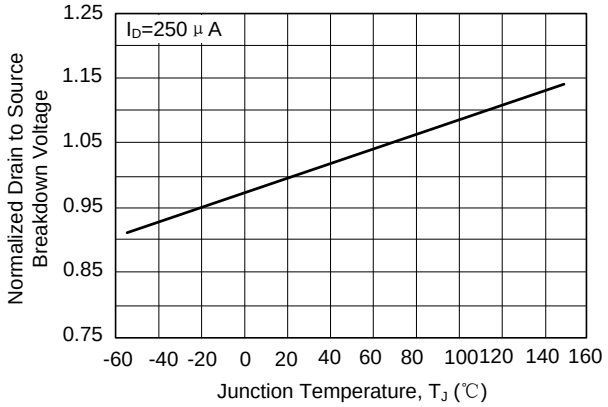

Capacitance vs. Drain to Source Voltage

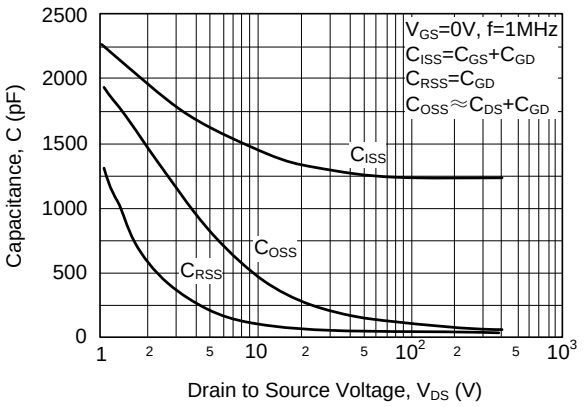

■ TYPICAL PERFORMANCE CUVES (Cont.)

Transconduce vs. Drain Current

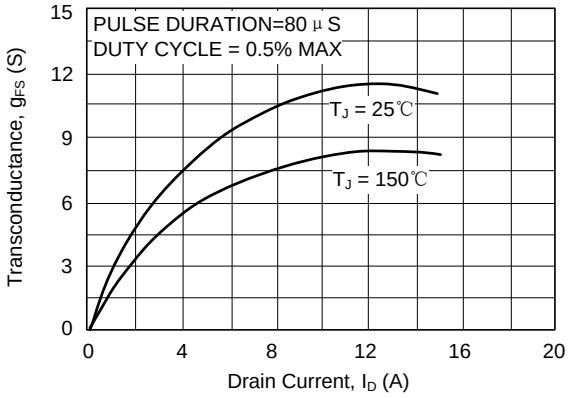

Source to Drain Diode Voltage

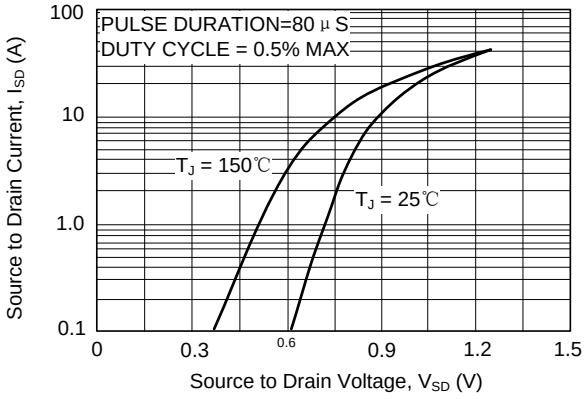

Drain to Source on Resistance vs. Voltage and Drain Current

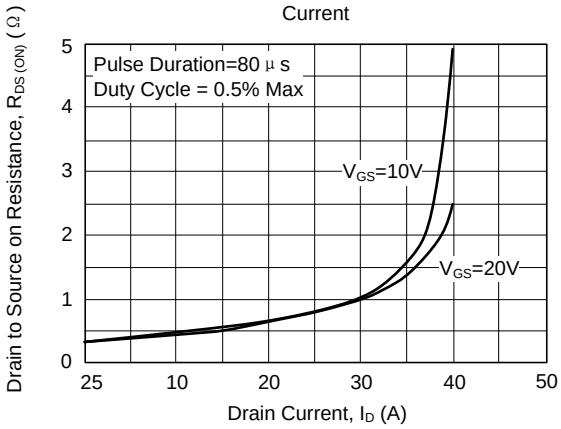

Gate to Source Voltage vs. Gate Charge

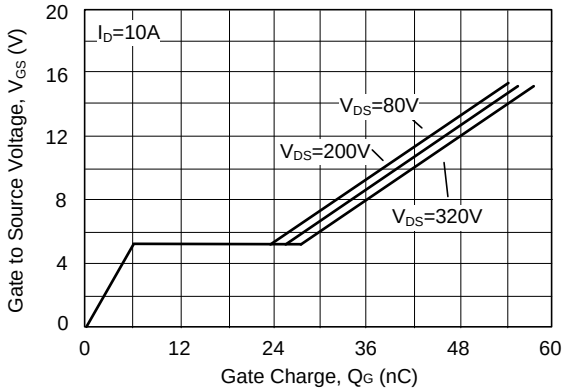

UTC assumes no responsibility for equipment failures that result from using products at values that exceed, even momentarily, rated values (such as maximum ratings, operating condition ranges, or other parameters) listed in products specifications of any and all UTC products described or contained herein. UTC products are not designed for use in life support appliances, devices or systems where malfunction of these products can be reasonably expected to result in personal injury. Reproduction in whole or in part is prohibited without the prior written consent of the copyright owner. The information presented in this document does not form part of any quotation or contract, is believed to be accurate and reliable and may be changed without notice.

ENTEGRECİ

Bu belge www.entegreci.com üzerinden sunulmaktadır.

Elektronik komponent tedarikinde Entegreci

Entegreci, Eskişehir merkezli, Türkiye geneline satış yapan bir elektronik komponent mağazasıdır. Entegreler (IC), mikrodenetleyiciler, transistörler, diyotlar, pasif elemanlar, konnektörler, modüller ve geliştirme kartları tek adetten seri üretim adetlerine kadar satılır. Ürün sayfalarında güncel stok durumunu, fiyatı ve datasheet bağlantısını bulabilirsiniz.

Parça koduyla arama

Üretici parça numarasını yazın; stok ve fiyatı hemen görün.

www.entegreci.com

Ürün kategorileri

Entegreden kapasitöre tüm elektronik komponent kategorileri.

Kategorilere göz atın

Üreticiler

Aradığınız üreticinin ürünlerini tek sayfada inceleyin.

Üreticileri görün

Toplu alım ve teklif

Listede olmayan ya da yüksek adetli parçalar için teklif isteyin.

Teklif isteyin

www.entegreci.com | **destek@entegreci.com** | **0850 305 90 34**

Entegreci is an online electronic components store based in Türkiye. Search by manufacturer part number to see stock, prices and datasheets for integrated circuits, microcontrollers, transistors, passive components and connectors, or request a quote for parts that are not listed.

Bu sayfa Entegreci tarafından eklenmiştir. Belgenin önceki sayfaları asıl yayıncısına aittir ve içeriği değiştirilmemiştir; en güncel sürüm için belgenin yayıncısına başvurun.