UF630

Power MOSFET

200V, 9A N-CHANNEL POWER MOSFET

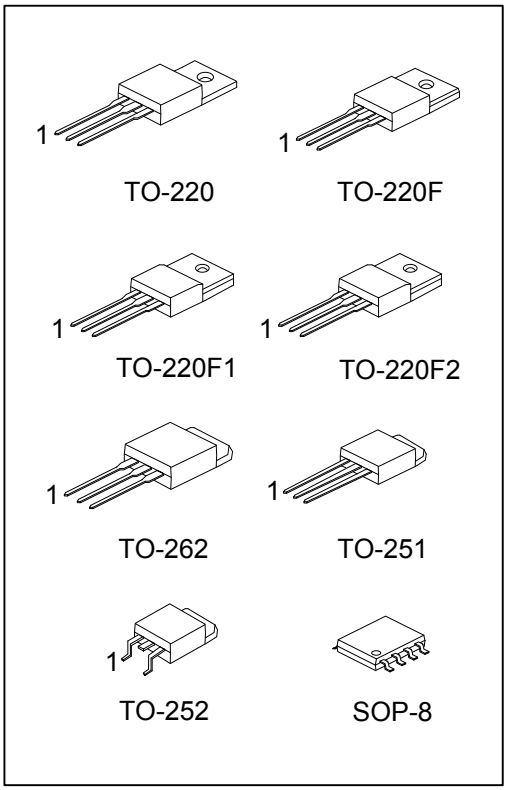

■ DESCRIPTION

The N-Channel enhancement mode silicon gate power MOSFET is designed for high voltage, high speed power switching applications such as switching regulators, switching converters, solenoid, motor drivers, relay drivers.

■ FEATURES

* $R_{DS(ON)}$ < 0.4Ω @ V_{GS} = 10V, I_D = 5A
* Ultra Low Gate Charge (typical 19 nC)
* Low Reverse Transfer Capacitance (C_{RSS} = typical 80 pF)
* Fast Switching Capability
* Avalanche Energy Specified
* Improved dv/dt Capability

■ SYMBOL

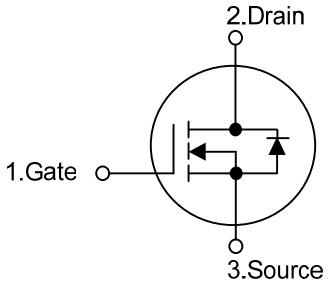

■ ORDERING INFORMATION

Ordering Number		Package	Pin Assignment								Packing
Lead Free	Halogen Free		1	2	3	4	5	6	7	8	
UF630L-TA3-T	UF630G-TA3-T	TO-220	G	D	S	-	-	-	-	-	Tube
UF630L-TF1-T	UF630G-TF1-T	TO-220F1	G	D	S	-	-	-	-	-	Tube
UF630L-TF2-T	UF630G-TF2-T	TO-220F2	G	D	S	-	-	-	-	-	Tube
UF630L-TF3-T	UF630G-TF3-T	TO-220F	G	D	S	-	-	-	-	-	Tube
UF630L-TM3-T	UF630G-TM3-T	TO-251	G	D	S	-	-	-	-	-	Tube
UF630L-TN3-R	UF630G-TN3-R	TO-252	G	D	S	-	-	-	-	-	Tape Reel
UF630L-T2Q-T	UF630G-T2Q-T	TO-262	G	D	S	-	-	-	-	-	Tube
-	UF630G-S08-R	SOP-8	S	S	S	G	D	D	D	D	Tape Reel

Note: Pin Assignment: G: Gate D: Drain S: Source

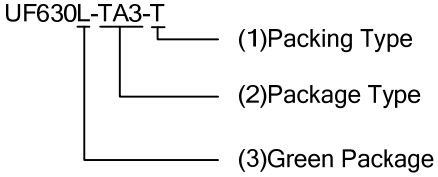

(1) T: Tube, R: Tape Reel
(2) TA3: TO-220, TF1: TO-220F1, TF2: TO-220F2, TF3:TO-220F, TM3: TO-251, TN3: TO-252, T2Q: TO-262, S08: SOP-8
(3) L: Lead Free, G: Halogen Free and Lead Free

Copyright © 2015 Unisonic Technologies Co., Ltd

■ MARKING

TO-220 / TO-220F / TO-220F1 TO-220F2 / TO-252 / TO-262	SOP-8
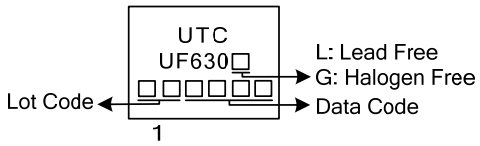	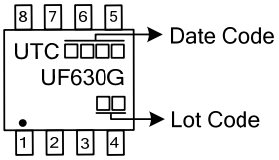

■ ABSOLUTE MAXIMUM RATINGS (T_C = 25°C, unless otherwise specified)

PARAMETER		SYMBOL	RATINGS	UNIT
Drain-Source Voltage		V_{DSS}	200	V
Drain-Gate Voltage (R_{GS} = 20kΩ, T_J =25°C ~125°C)		V_{DGR}	200	V
Gate-Source Voltage		V_{GSS}	±20	V
Continuous Drain Current		I_D	9	A
Pulsed Drain Current (Note 2)		I_{DM}	36	A
Single Pulse Avalanche Energy (Note 3)		E_{AS}	150	mJ
Power Dissipation	TO-220/TO-262	P_D	73	W
	TO-220F1/ TO-220F		38	
	TO-220F2		42	
	TO-251/ TO-252		46	
	SOP-8		5	
Junction Temperature		T_J	+150	°C
Storage Temperature		T_{STG}	-55 ~ +150	°C

Notes: 1. Absolute maximum ratings are those values beyond which the device could be permanently damaged. Absolute maximum ratings are stress ratings only and functional device operation is not implied.
2. Repetitive Rating : Pulse width limited by T_J.
3. L = 4mH, I_{AS} = 8.3A, V_{DD} = 20V, R_G = 25 Ω, Starting T_J = 25°C

■ THERMAL DATA

PARAMETER		SYMBOL	RATING	UNIT
Junction to Ambient	TO-220/TO-262 TO-220F1/ TO-220F TO-220F2	θ_{JA}	62.5	°C/W
	TO-251/ TO-252		100.3	
	SOP-8		83	
Junction to Case	TO-220/TO-262	θ_{JC}	1.71	°C/W
	TO-220F1/ TO-220F		3.31	
	TO-220F2		2.98	
	TO-251/ TO-252		2.7	
	SOP-8		24	

■ ELECTRICAL SPECIFICATIONS (T_C =25°C, unless otherwise specified)

PARAMETER		SYMBOL	TEST CONDITIONS	MIN	TYP	MAX	UNIT
OFF CHARACTERISTICS							
Drain-Source Breakdown Voltage		BV_{DSS}	V_{GS} = 0V, I_D = 250μA	200			V
On-State Drain Current (Note 1)		$I_{D(ON)}$	V_{DS} > $I_{D(ON)}$ x $R_{DS(ON)MAX}$, V_{GS} = 10V	9			A
Drain-Source Leakage Current		I_{DSS}	V_{DS} = Rated BV_{DSS}, V_{GS} = 0V			10	μA
Gate-Source Leakage Current	Forward	I_{GSS}	V_{GS} = 20V, V_{DS} = 0V			100	nA
	Reverse		V_{GS} = -20V, V_{DS} = 0V			-100	nA
ON CHARACTERISTICS							
Gate Threshold Voltage		$V_{GS(TH)}$	V_{GS} = V_{DS}, I_D = 250μA	2		4	V
Static Drain-Source On-State Resistance		$R_{DS(ON)}$	V_{GS} = 10V, I_D = 5A		0.25	0.4	Ω
DYNAMIC CHARACTERISTICS							
Input Capacitance		C_{ISS}	V_{DS} = 25V, V_{GS} = 0V, f = 1.0MHz		600		pF
Output Capacitance		C_{OSS}			250		pF
Reverse Transfer Capacitance		C_{RSS}			80		pF
SWITCHING CHARACTERISTICS							
Turn-On Delay Time		$t_{D(ON)}$	V_{DD} = 90V, I_D≈9A, R_{GS} = 9.1Ω, V_{GS} = 10V, R_L = 9.6Ω (Note 1, 2)			30	ns
Turn-On Rise Time		t_R				50	ns
Turn-Off Delay Time		$t_{D(OFF)}$				50	ns
Turn-Off Fall Time		t_F				40	ns
Total Gate Charge		Q_G	V_{GS} = 10V, I_D = 9A, V_{DS} = 0.8 x Rated BV_{DSS} $I_{G(REF)}$ = 1.5mA		19	30	nC
Gate-Source Charge		Q_{GS}			10		nC
Gate-Drain Charge		Q_{GD}			9		nC
DRAIN-SOURCE DIODE CHARACTERISTICS AND MAXIMUM RATINGS							
Drain-Source Diode Forward Voltage		V_{SD}	V_{GS} =0V, I_S = 9.0A			2	V
Maximum Continuous Drain-Source Diode Forward Current		I_S				9	A
Maximum Pulsed Drain-Source Diode Forward Current		I_{SM}				36	A
Reverse Recovery Time		t_{rr}	I_S = 9.0A, dI_S/dt = 100A/μs (Note 1)		450		ns
Reverse Recovery Charge		Q_{RR}			3		μC

Notes: 1. Pulse Test: Pulse width ≤300μs, Duty cycle≤2%.
2. Essentially independent of operating temperature.

■ TEST CIRCUITS AND WAVEFORMS

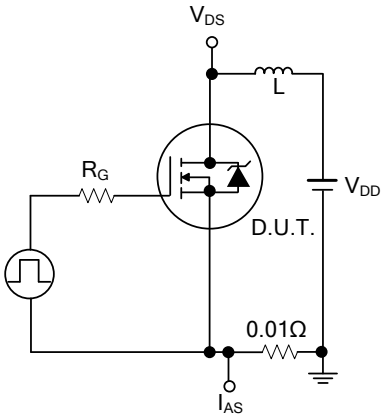

Fig1. Unclamped Energy Test Circuit

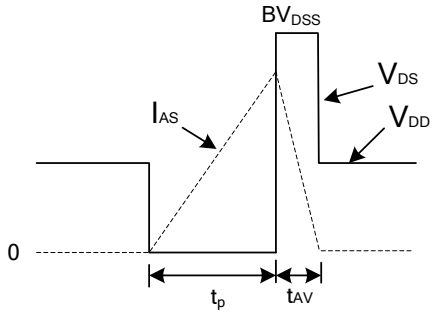

Fig.2 Unclamped Energy Waveforms

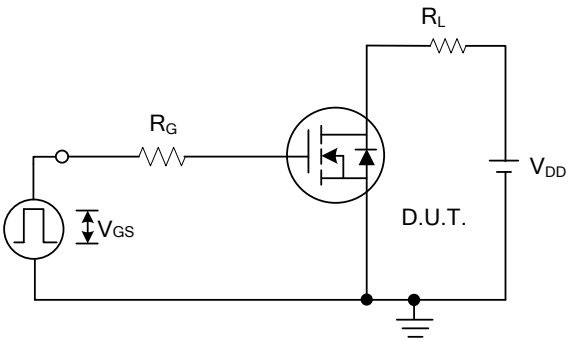

Fig.3 Switching Time Test Circuit

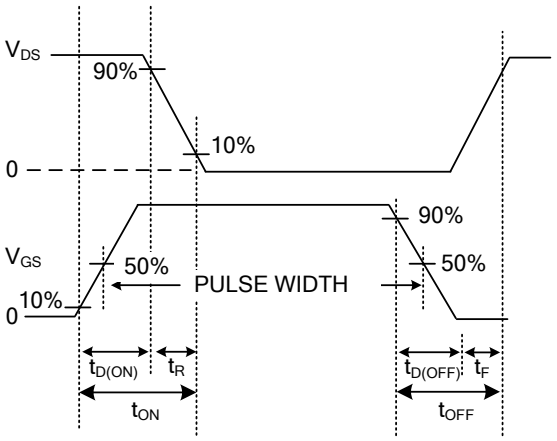

Fig.4 Resistive Switching Waveforms

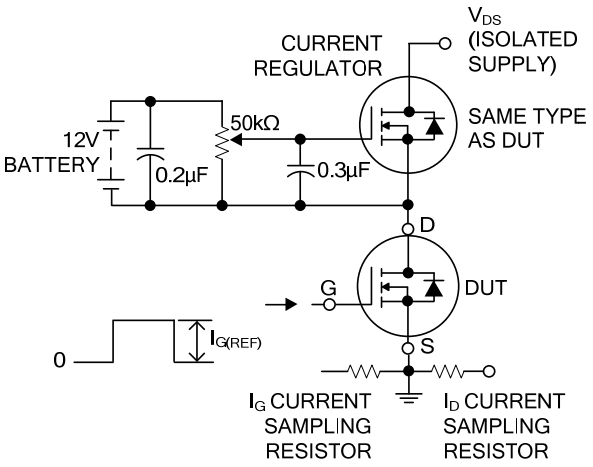

Fig.5 Gate Charge Test Circuit

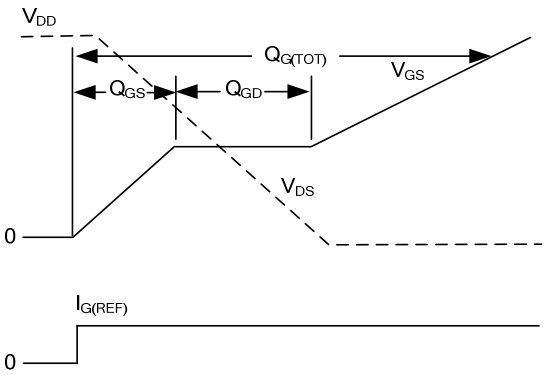

Fig.6 Gate Charge Waveforms

■ TYPICAL CHARACTERISTICS

Normalized Power Dissipation vs. Case Temperature

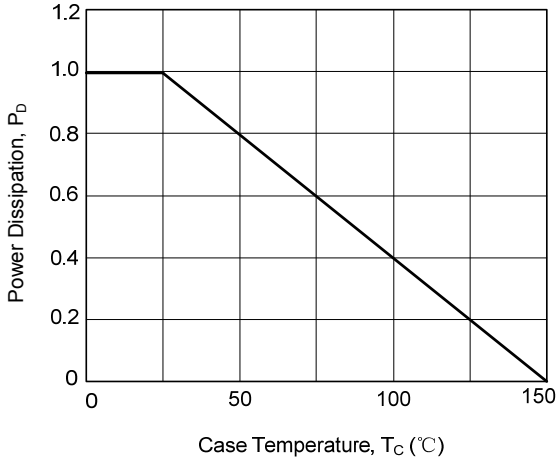

Maximum Contionuous Drain Current vs. Case Temperature

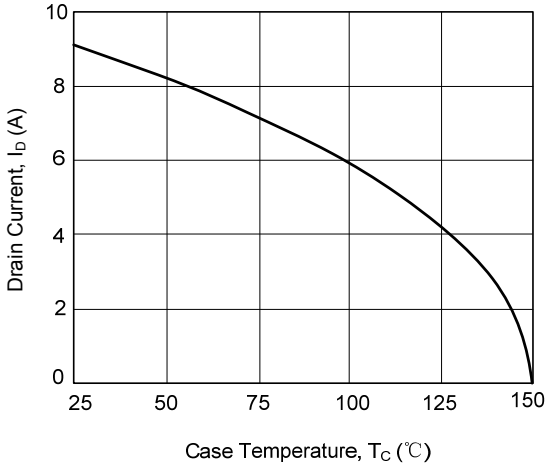

Normalized Transient Thermal Impedance

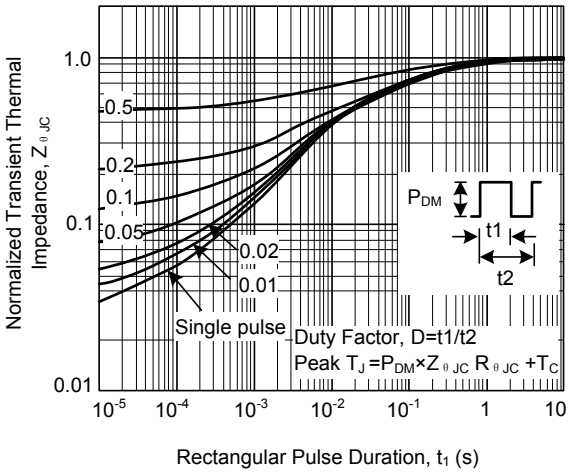

Forward Bias Safe Operating Area

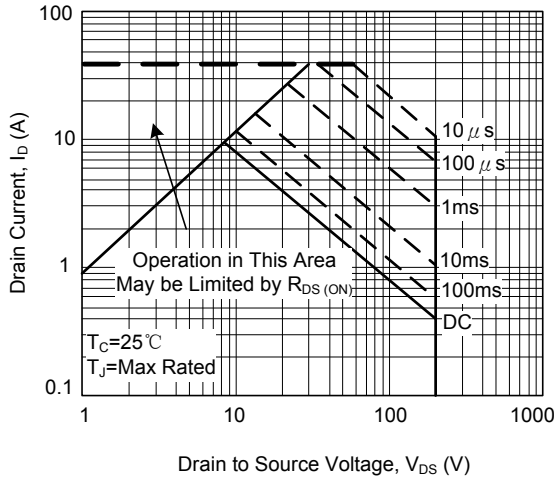

Output Characteristics

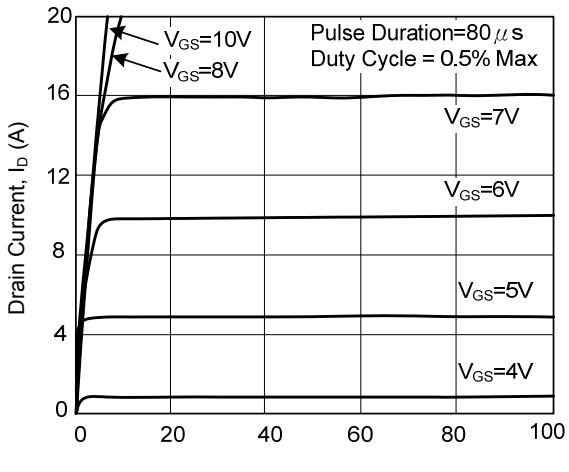

Saturation Characteristics

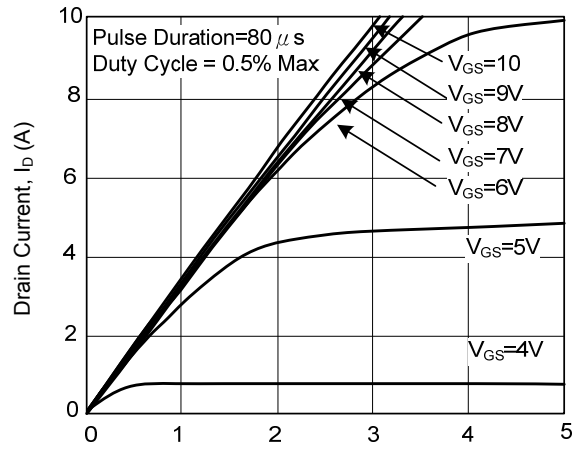

■ TYPICAL CHARACTERISTICS (Cont.)

Transfer Characteristics

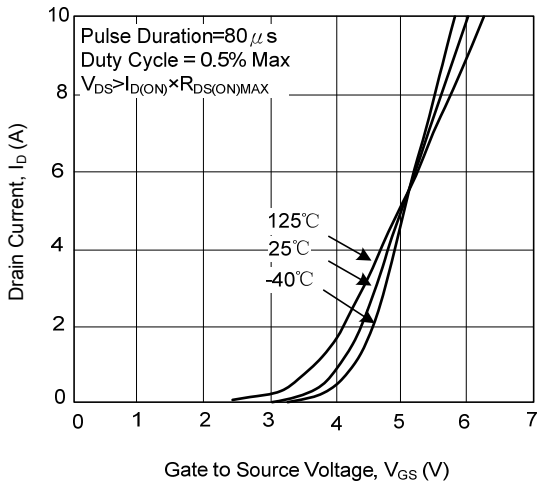

Drain to Source on Resistance vs. Gate Voltage and Drain Current

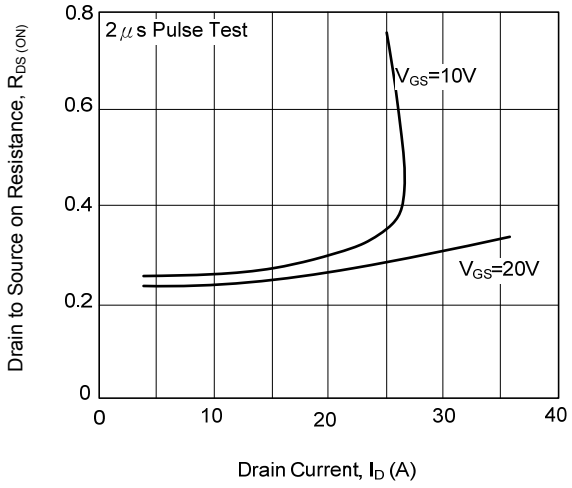

Normalized Drain to Source on Resistance vs. Junction Temperture

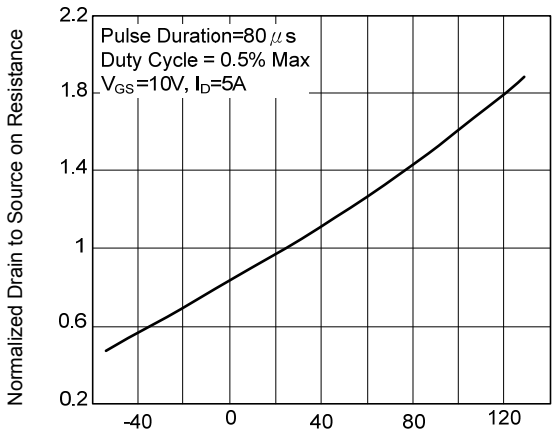

Normalized Drain to Source Breakdown Voltage vs. Junction Temperature

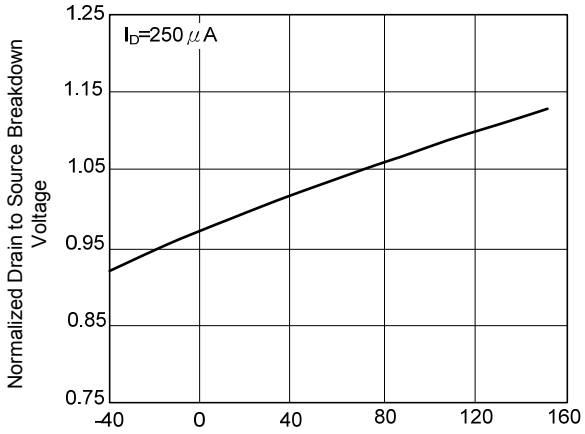

Source to Drain Diode Voltage

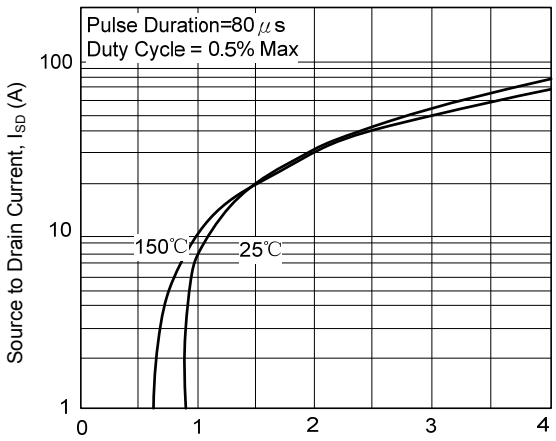

Gate to Source Voltage vs. Gate Charge

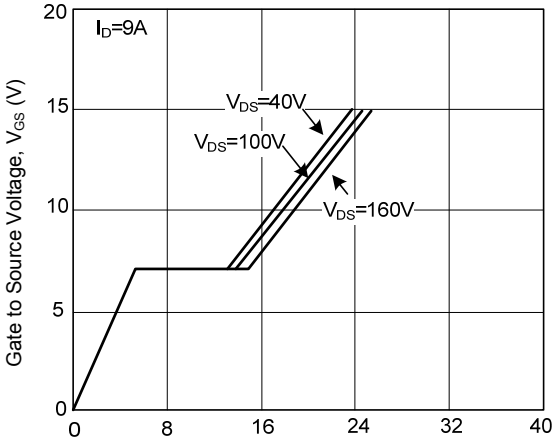

■ TYPICAL CHARACTERISTICS (Cont.)

Capacitance vs. Drain to Source Voltage

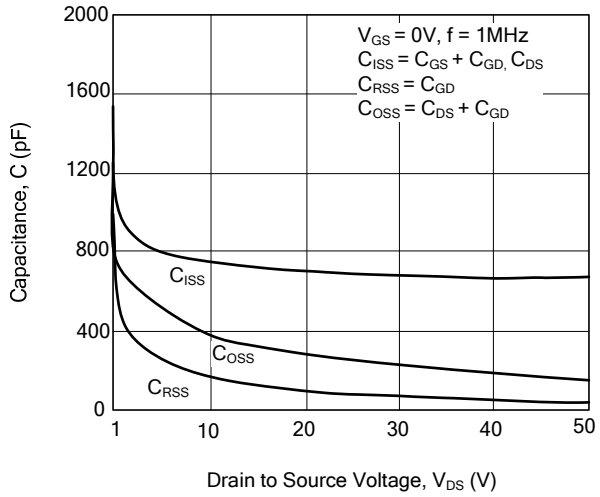

Drain Current vs. Source to Drain Voltage

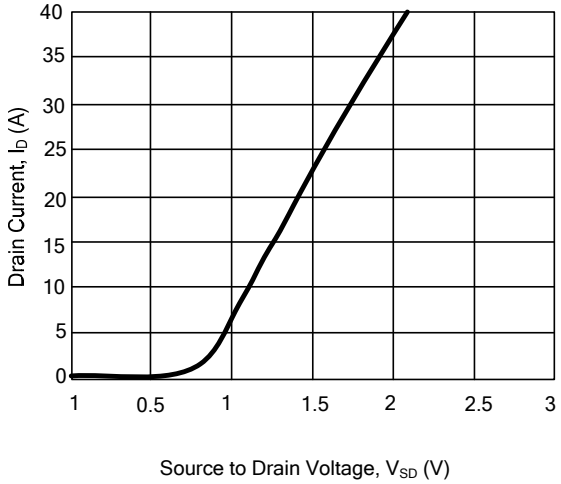

Drain Current vs. Drain-Source Breakdown Voltage

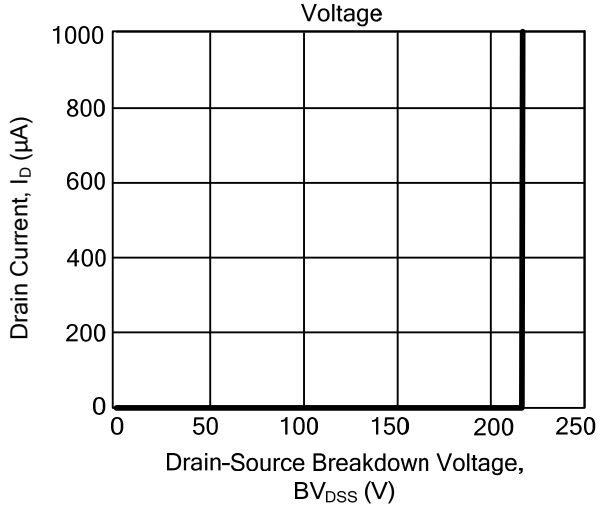

Drain Current vs. Gate Threshold Voltage

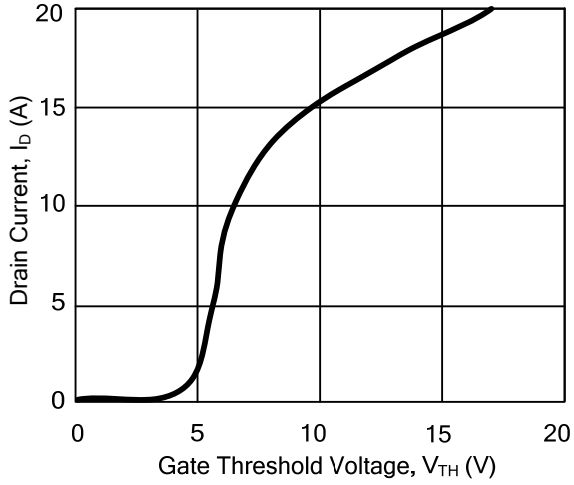

UTC assumes no responsibility for equipment failures that result from using products at values that exceed, even momentarily, rated values (such as maximum ratings, operating condition ranges, or other parameters) listed in products specifications of any and all UTC products described or contained herein. UTC products are not designed for use in life support appliances, devices or systems where malfunction of these products can be reasonably expected to result in personal injury. Reproduction in whole or in part is prohibited without the prior written consent of the copyright owner. The information presented in this document does not form part of any quotation or contract, is believed to be accurate and reliable and may be changed without notice.

ENTEGRECİ

Bu belge www.entegreci.com üzerinden sunulmaktadır.

Elektronik komponent tedarikinde Entegreci

Entegreci, Eskişehir merkezli, Türkiye geneline satış yapan bir elektronik komponent mağazasıdır. Entegreler (IC), mikrodenetleyiciler, transistörler, diyotlar, pasif elemanlar, konnektörler, modüller ve geliştirme kartları tek adetten seri üretim adetlerine kadar satılır. Ürün sayfalarında güncel stok durumunu, fiyatı ve datasheet bağlantısını bulabilirsiniz.

Parça koduyla arama

Üretici parça numarasını yazın; stok ve fiyatı hemen görün.

www.entegreci.com

Ürün kategorileri

Entegreden kapasitöre tüm elektronik komponent kategorileri.

Kategorilere göz atın

Üreticiler

Aradığınız üreticinin ürünlerini tek sayfada inceleyin.

Üreticileri görün

Toplu alım ve teklif

Listede olmayan ya da yüksek adetli parçalar için teklif isteyin.

Teklif isteyin

www.entegreci.com | **destek@entegreci.com** | **0850 305 90 34**

Entegreci is an online electronic components store based in Türkiye. Search by manufacturer part number to see stock, prices and datasheets for integrated circuits, microcontrollers, transistors, passive components and connectors, or request a quote for parts that are not listed.

Bu sayfa Entegreci tarafından eklenmiştir. Belgenin önceki sayfaları asıl yayıncısına aittir ve içeriği değiştirilmemiştir; en güncel sürüm için belgenin yayıncısına başvurun.