500mA Low Quiescent Current CMOS LDO

DESCRIPTION

TS9013 is a positive voltage regulator developed utilizing CMOS technology featured very low power consumption, low dropout voltage and high output voltage accuracy. Built in low on-resistor provides low dropout voltage and large output current. A 2.2μF or greater can be used as an output capacitor.TS9013 are prevented device failure under the worst operation condition with both thermal shutdown and current fold-back. These series are recommended for configuring portable devices and large current application, respectively.

FEATURES

- Output current up to 500mA
- Low power consumption, 15μA(typ.) @V_O=5V
- Output voltage ±2%
- Internal current limit
- Thermal shutdown protection
- Compliant to RoHS Directive 2011/65/EU and in accordance to WEEE 2002/96/EC.
- Halogen-free according to IEC 61249-2-21

APPLICATION

- Palmtops
- Video recorders
- Battery powered equipment
- PC peripherals
- CD-ROM, DVD ROM
- Digital signal camera

Pb-Free RoHS COMPLIANT HALOGEN FREE

SOT-89



Pin Definition:
1. Ground
2. Input
3. Output

SOT-223



Pin Definition:
1. Input
2. Ground
3. Output

TYPICAL APPLICATION CIRCUIT

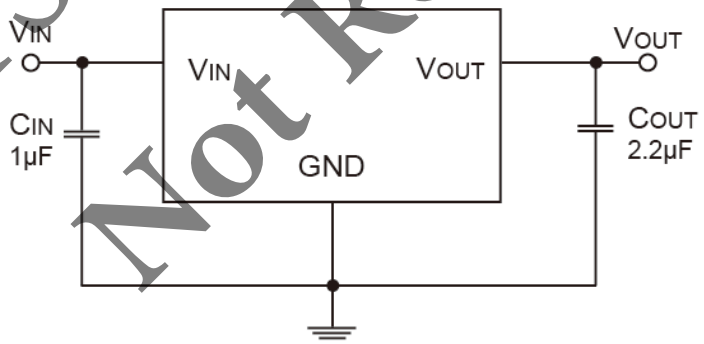

TS9013CW RPG
TS9013CW RPG
Not Recommended

ABSOLUTE MAXIMUM RATINGS (T_A = 25°C unless otherwise noted)				
PARAMETER		**SYMBOL**	**LIMIT**	**UNIT**
Input Supply Voltage		V_{IN}	12	V
Recommend Operating Input Voltage		V_{IN}	10	V
Output Current		Io	500	mA
Power Dissipation (without heat sink)	SOT-89	P_D	0.5	W
	SOT-223		0.7	
Operating Junction Temperature Range		T_J	-40 ~ +150	°C
Storage Temperature Range		T_{STG}	-65 ~ +150	°C
Lead Soldering Temperature (260°C)			5	S

Notes: Stress above the listed absolute rating may cause permanent damage to the device.

ELECTRICAL SPECIFICATIONS (T_A = 25°C unless otherwise noted)						
PARAMETER	**CONDITIONS**		**MIN**	**TYP**	**MAX**	**UNIT**
Output Voltage	$V_{IN}=V_O$ + 1V, Io =1mA,	TS90135	4.90	5.0	5.10	V
		TS9013S	3.23	3.3	3.36	
		TS9013K	2.45	2.5	2.55	
		TS9013D	1.76	1.8	1.83	
	$V_{IN}=V_O$ + 1V, I_O =1mA ~ 500mA	TS90135	4.85	5.0	5.10	V
		TS9013S	3.20	3.3	3.36	
		TS9013K	2.42	2.5	2.55	
		TS9013D	1.74	1.8	1.83	
Maximum Output Current	$V_{IN}=V_O$+1V,		500	--	--	mA
Input Stability	V_O+1V ≤ V_{IN} ≤ V_O+2V, I_O=1mA		--	0.2	0.3	%
Load Regulation (Note1)	$V_{IN}=V_O$+1V, 1mA ≤ IL ≤ 500mA	TS90135	--	40	80	mV
		TS9013S				
	$V_{IN}=V_O$+1V, 1mA ≤ IL ≤ 500mA	TS9013K	--	40	90	
		TS9013D				
Dropout Voltage (Note 2)	I_O=300mA	TS90135	--	300	500	mV
		TS9013S				
	I_O=500mA	TS90135	--	500	600	
		TS9013S				
	I_O=500mA	TS9013K	--	600	850	
		TS9013D				
Quiescent Current	$V_{IN}=V_O$+1V, I_O=0A		--	15	25	µA
Output Current Limit	V_{OUT} < 0.4V		550	--	--	mA
Power Supply Rejection Ratio	At f=100KHz, I_O=10mA		--	30	--	dB
Output Voltage Temperature Coefficient			--	100	--	ppm/°C

TS90135CW RPG
TS90135CW RPG
Not Recommended

Note:

1. Regulation is measured at constant junction temperature, using pulsed ON time.
2. Dropout is measured at constant junction temperature, using pulsed ON time, and the criterion is V_{OUT} inside target value +/- 3%.

ORDERING INFORMATION

OUTPUT VOLTAGE	PART NO.	PACKAGE	PACKING
1.8V	TS9013DCW RPG	SOT-223	2,500pcs / 13” Reel
	TS9013DCY RMG	SOT-89	1,000pcs / 7” Reel
2.5V	TS9013KCW RPG	SOT-223	2,500pcs / 13” Reel
3.3V	TS9013SCW RPG	SOT-223	2,500pcs / 13” Reel
	TS9013SCY RMG	SOT-89	1,000pcs / 7” Reel
5V	TS90135CW RPG	SOT-223	2,500pcs / 13” Reel

TS90135CW RPG
TS9013SCW RPG
Not Recommended

PACKAGE OUTLINE DIMENSIONS (Unit: Millimeters)

SOT-89

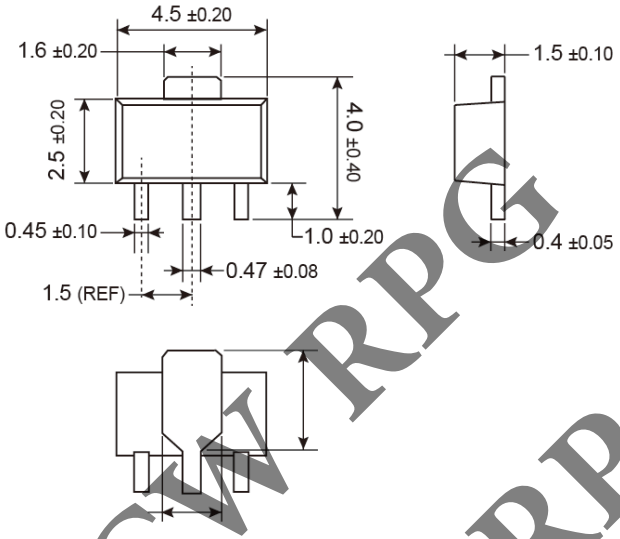

SUGGESTED PAD LAYOUT (Unit: Millimeters)

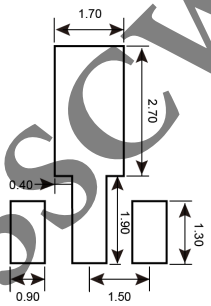

MARKING DIAGRAM

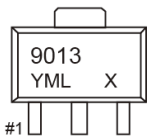

Y = Year Code

M = Month Code for Halogen Free Product

O	=Jan	**P**	=Feb	**Q**	=Mar	**R**	=Apr
S	=May	**T**	=Jun	**U**	=Jul	**V**	=Aug
W	=Sep	**X**	=Oct	**Y**	=Nov	**Z**	=Dec

L = Lot Code (1~9, A~Z)

X = Fixed Output Voltage Code

18=1.8V, **33**=3.3V, **50**=5.0V..

TS9013SCW RPG
TS9013SCW RPG
Not Recommended

PACKAGE OUTLINE DIMENSIONS (Unit: Millimeters)

SOT-223

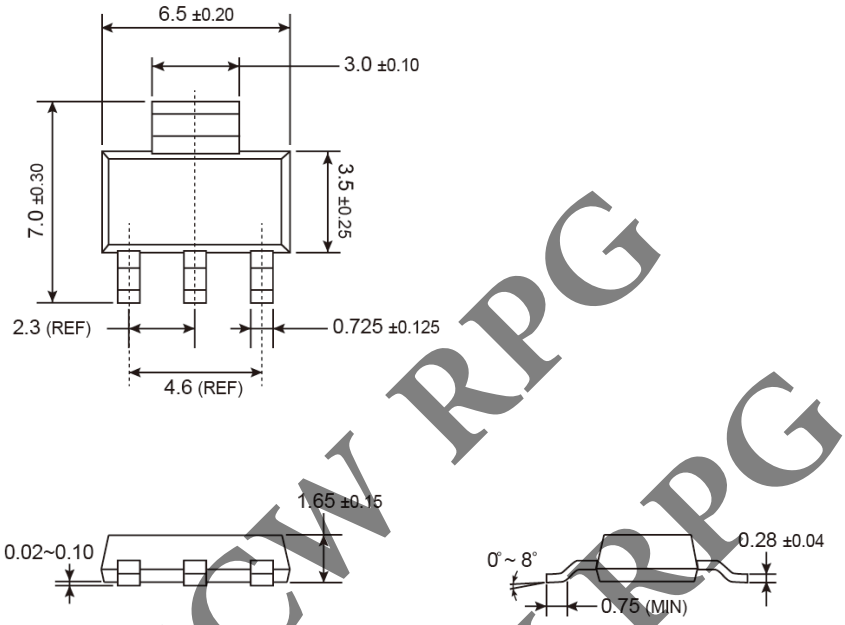

SUGGESTED PAD LAYOUT (Unit: Millimeters)

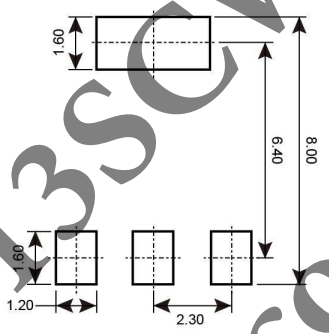

MARKING DIAGRAM

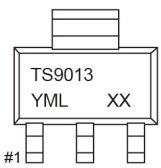

Y = Year Code

M = Month Code for Halogen Free Product

O	=Jan	**P**	=Feb	**Q**	=Mar	**R**	=Apr
S	=May	**T**	=Jun	**U**	=Jul	**V**	=Aug
W	=Sep	**X**	=Oct	**Y**	=Nov	**Z**	=Dec

L = Lot Code (1~9, A~Z)

X = Fixed Output Voltage Code

18=1.8V, **25**=3.3V, **33**=3.3V, **50**=5.0V..

TS9013SCW RPG
TS9013SCW RPG
Not Recommended

TS90135CW RPG
TS9013SCW RPG
Not Recommended

Notice

Specifications of the products displayed herein are subject to change without notice. TSC or anyone on its behalf, assumes no responsibility or liability for any errors or inaccuracies.

Information contained herein is intended to provide a product description only. No license, express or implied, to any intellectual property rights is granted by this document. Except as provided in TSC's terms and conditions of sale for such products, TSC assumes no liability whatsoever, and disclaims any express or implied warranty, relating to sale and/or use of TSC products including liability or warranties relating to fitness for a particular purpose, merchantability, or infringement of any patent, copyright, or other intellectual property right.

The products shown herein are not designed for use in medical, life-saving, or life-sustaining applications. Customers using or selling these products for use in such applications do so at their own risk and agree to fully indemnify TSC for any damages resulting from such improper use or sale.

ENTEGRECİ

Bu belge www.entegreci.com üzerinden sunulmaktadır.

Elektronik komponent tedarikinde Entegreci

Entegreci, Eskişehir merkezli, Türkiye geneline satış yapan bir elektronik komponent mağazasıdır. Entegreler (IC), mikrodenetleyiciler, transistörler, diyotlar, pasif elemanlar, konnektörler, modüller ve geliştirme kartları tek adetten seri üretim adetlerine kadar satılır. Ürün sayfalarında güncel stok durumunu, fiyatı ve datasheet bağlantısını bulabilirsiniz.

Parça koduyla arama

Üretici parça numarasını yazın; stok ve fiyatı hemen görün.

www.entegreci.com

Ürün kategorileri

Entegreden kapasitöre tüm elektronik komponent kategorileri.

Kategorilere göz atın

Üreticiler

Aradığınız üreticinin ürünlerini tek sayfada inceleyin.

Üreticileri görün

Toplu alım ve teklif

Listede olmayan ya da yüksek adetli parçalar için teklif isteyin.

Teklif isteyin

www.entegreci.com | **destek@entegreci.com** | **0850 305 90 34**

Entegreci is an online electronic components store based in Türkiye. Search by manufacturer part number to see stock, prices and datasheets for integrated circuits, microcontrollers, transistors, passive components and connectors, or request a quote for parts that are not listed.

Bu sayfa Entegreci tarafından eklenmiştir. Belgenin önceki sayfaları asıl yayıncısına aittir ve içeriği değiştirilmemiştir; en güncel sürüm için belgenin yayıncısına başvurun.