AUTOMOTIVE N-Channel 60V 175°C MOSFET

FEATURES

- AEC-Q101 Qualified
- 100% UIS and R_g Tested
- 175°C Operating Junction Temperature
- Wettable Flank Package
- RoHS Compliant
- Halogen-free according to IEC 61249-2-21

APPLICATIONS

- 12V Automotive Systems
- Solenoid and Motor Control
- Automotive Transmission Control
- DC-DC Converters

PRODUCT SUMMARY			
PARAMETER		**VALUE**	**UNIT**
V_{DS}		60	V
$R_{DS(on)}$ (max)	V_{GS} = 10V	13	mΩ
	V_{GS} = 7V	18.5	
Q_g		40	nC

Pb-Free RoHS COMPLIANT HALOGEN FREE

PDFN56U



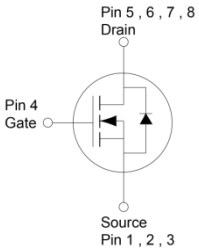

Note: MSL 1 (Moisture Sensitivity Level) per J-STD-020

ABSOLUTE MAXIMUM RATINGS (T_A = 25°C unless otherwise noted)				
PARAMETER		**SYMBOL**	**LIMIT**	**UNIT**
Drain-Source Voltage		V_{DS}	60	V
Gate-Source Voltage		V_{GS}	±20	V
Continuous Drain Current (Note 1)	T_C = 25°C	I_D	50	A
	T_A = 25°C		10	
Pulsed Drain Current		I_{DM}	200	A
Single Pulse Avalanche Current (Note 2)		I_{AS}	21	A
Single Pulse Avalanche Energy (Note 2)		E_{AS}	66	mJ
Total Power Dissipation	T_C = 25°C	P_D	83	W
	T_C = 125°C		28	
Total Power Dissipation	T_A = 25°C	P_D	3.1	W
	T_A = 125°C		1	
Operating Junction and Storage Temperature Range		T_J, T_{STG}	- 55 to +175	°C

THERMAL RESISTANCE			
PARAMETER	**SYMBOL**	**MAXIMUM**	**UNIT**
Thermal Resistance – Junction to Case	$R_{\Theta JC}$	1.8	°C/W
Thermal Resistance – Junction to Ambient	$R_{\Theta JA}$	48	°C/W

Thermal Performance Note: $R_{\Theta JA}$ is the sum of the junction-to-case and case-to-ambient thermal resistances. The case-thermal reference is defined at the solder mounting surface of the drain pins. $R_{\Theta JC}$ is guaranteed by design while $R_{\Theta CA}$ is determined by the user's board design. The $R_{\Theta JA}$ limit presented here is based on mounting on a 1 in^2 pad of 2 oz copper.

ELECTRICAL CHARACTERISTICS (T_A = 25°C unless otherwise noted)						
PARAMETER	**CONDITIONS**	**SYMBOL**	**MIN**	**TYP**	**MAX**	**UNIT**
Static						
Drain-Source Breakdown Voltage	V_{GS} = 0V, I_D = 250μA	BV_{DSS}	60	--	--	V
Gate Threshold Voltage	V_{GS} = V_{DS}, I_D = 250μA	$V_{GS(TH)}$	1.8	2.6	3.8	V
Gate-Source Leakage Current	V_{GS} = ±20V, V_{DS} = 0V	I_{GSS}	--	--	±100	nA
Drain-Source Leakage Current	V_{GS} = 0V, V_{DS} = 60V	I_{DSS}	--	--	1	μA
	V_{GS} = 0V, V_{DS} = 60V T_J = 125°C		--	--	100	
	V_{GS} = 0V, V_{DS} = 60V T_J = 175°C		--	--	500	
Drain-Source On-State Resistance (Note 3)	V_{GS} = 10V, I_D = 10A	$R_{DS(on)}$	--	11.7	13	mΩ
	V_{GS} = 10V, I_D = 10A, T_J = 125°C		--	23.4	26	
	V_{GS} = 10V, I_D = 10A, T_J = 175°C		--	30.4	33.8	
	V_{GS} = 7V, I_D = 8A		--	12.4	18.5	
Forward Transconductance (Note 3)	V_{DS} = 10V, I_D = 10A	g_{fs}	--	44	--	S
Dynamic (Note 4)						
Total Gate Charge	V_{GS} = 10V, V_{DS} = 30V, I_D = 10A	Q_g	--	40	--	nC
Total Gate Charge	V_{GS} = 7V, V_{DS} = 30V, I_D = 8A	Q_g	--	29	--	
Gate-Source Charge		Q_{gs}	--	10	--	
Gate-Drain Charge		Q_{gd}	--	10	--	
Input Capacitance	V_{GS} = 0V, V_{DS} = 30V, f = 1.0MHz	C_{iss}	--	2234	--	pF
Output Capacitance		C_{oss}	--	147	--	
Reverse Transfer Capacitance		C_{rss}	--	65	--	
Gate Resistance	f = 1.0MHz	R_g	0.5	1.8	3.6	Ω
Switching (Note 4)						
Turn-On Delay Time	V_{GS} = 10V, V_{DS} = 30V, I_D = 10A, R_G = 2Ω	$t_{d(on)}$	--	5	--	ns
Rise Time		t_r	--	21	--	
Turn-Off Delay Time		$t_{d(off)}$	--	24	--	
Fall Time		t_f	--	18	--	
Source-Drain Diode						
Diode Forward Voltage (Note 3)	V_{GS} = 0V, I_S = 10A	V_{SD}	--	--	1	V
Reverse Recovery Time	I_S = 10A, di/dt = 100A/μs	t_{rr}	--	22	--	ns
Reverse Recovery Charge		Q_{rr}	--	19	--	nC

Notes:

1. Silicon limited current only.
2. L = 0.3mH, V_{GS} = 10V, V_{DD} = 30V, R_G = 50Ω, I_{AS} = 21A, Starting T_J = 25°C
3. Pulse test: Pulse Width ≤ 300μs, duty cycle ≤ 2%.
4. Switching time is essentially independent of operating temperature.

ORDERING INFORMATION

ORDERING CODE	PACKAGE	PACKING
TQM130NB06CR RLG	PDFN56U	2,500pcs / 13” Reel

CHARACTERISTICS CURVES

(T_A = 25°C unless otherwise noted)

Output Characteristics

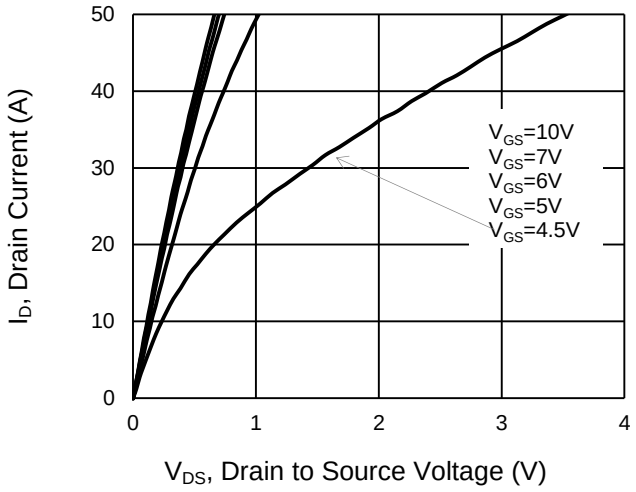

Transfer Characteristics

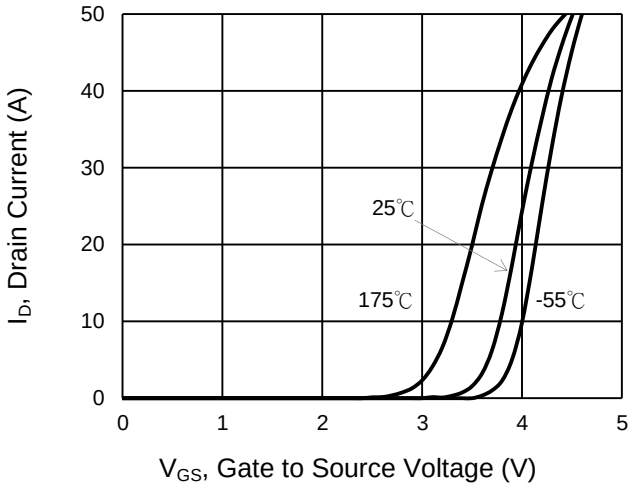

On-Resistance vs. Drain Current

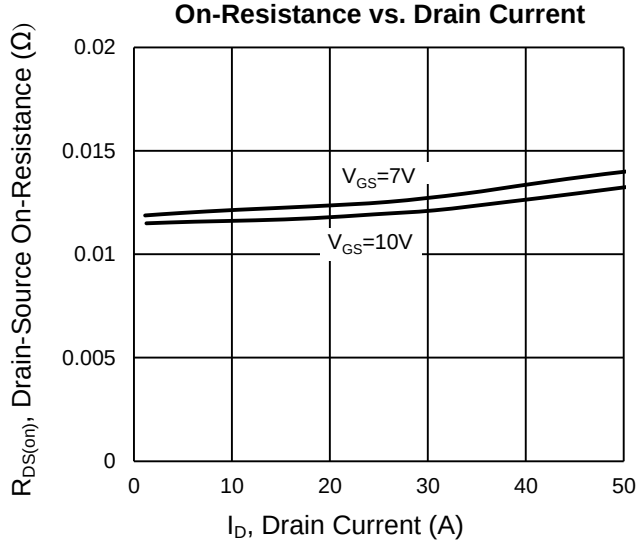

Gate-Source Voltage vs. Gate Charge

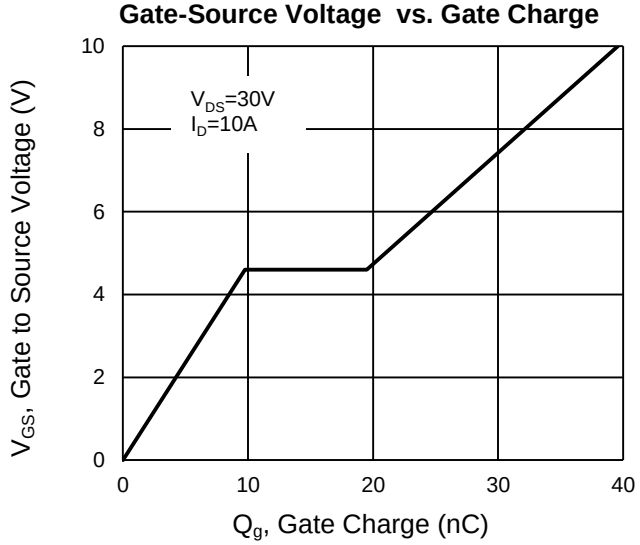

On-Resistance vs. Junction Temperature

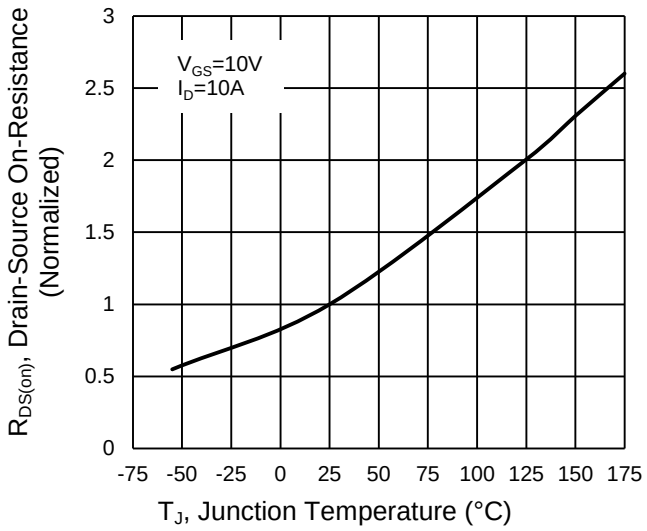

On-Resistance vs. Gate-Source Voltage

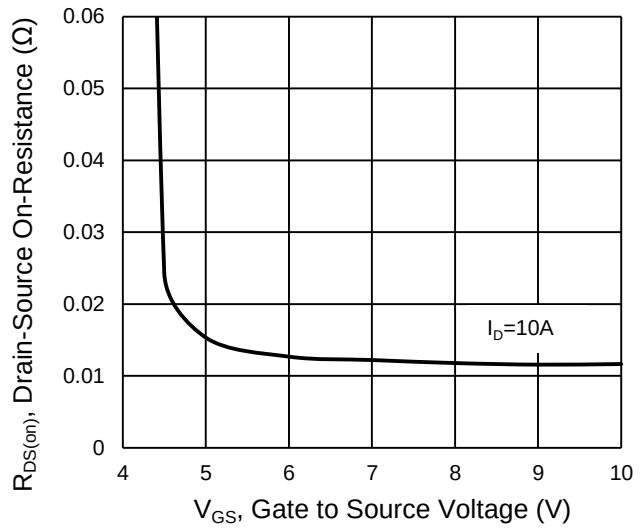

CHARACTERISTICS CURVES

(T_A = 25°C unless otherwise noted)

Capacitance vs. Drain-Source Voltage

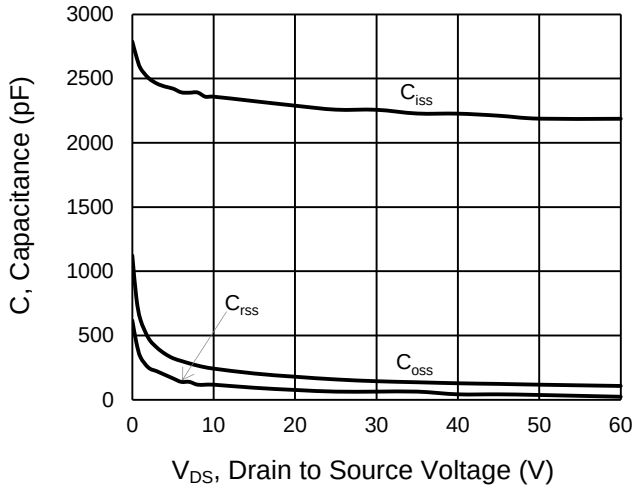

BV_{DSS} vs. Junction Temperature

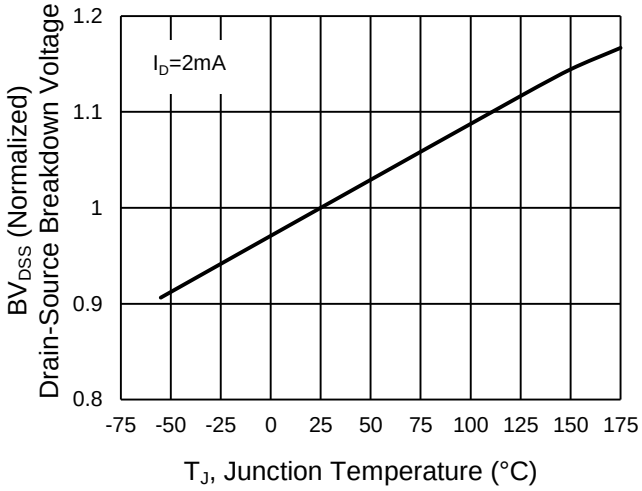

Maximum Safe Operating Area, Junction-to-Case

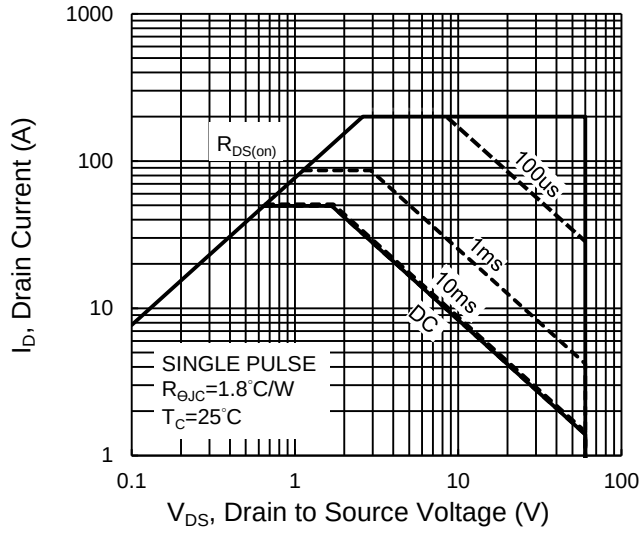

Source-Drain Diode Forward Current vs. Voltage

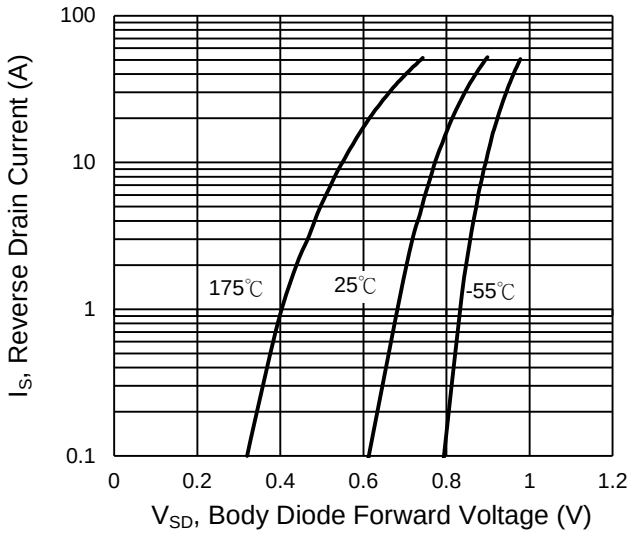

Normalized Thermal Transient Impedance, Junction-to-Case

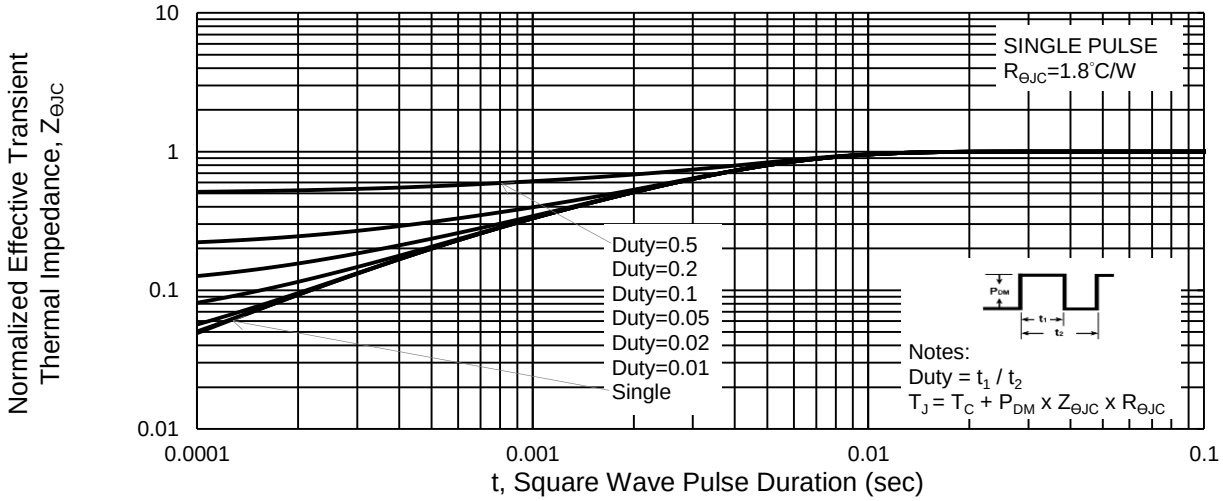

PACKAGE OUTLINE DIMENSIONS (Unit: Millimeters)

PDFN56U

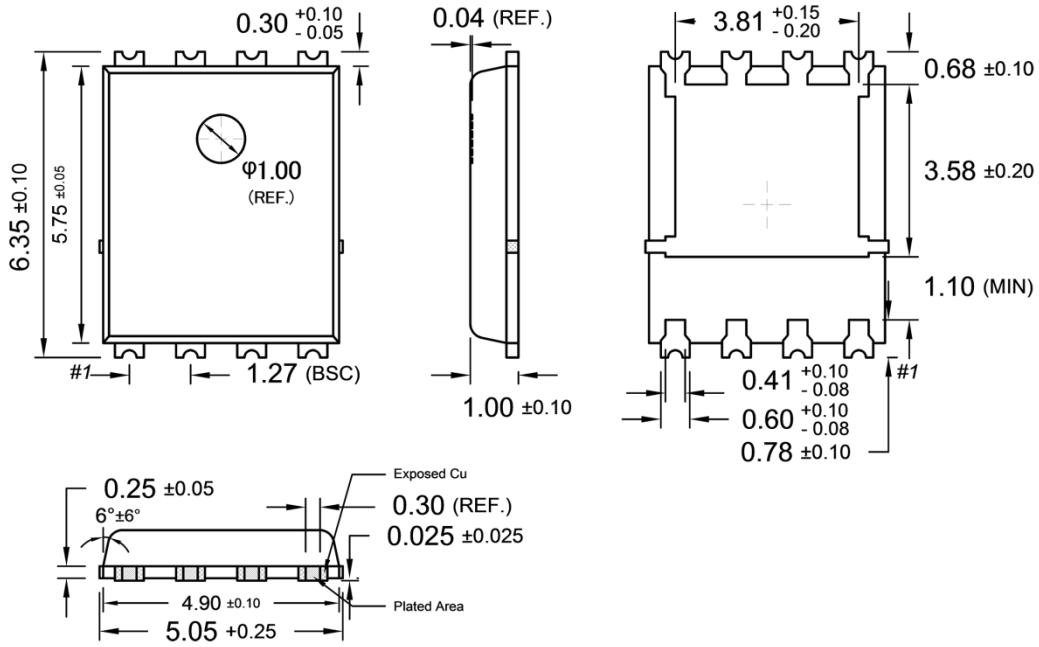

SUGGESTED PAD LAYOUT (Unit: Millimeters)

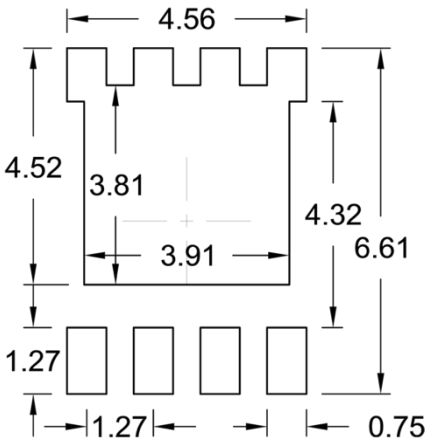

MARKING DIAGRAM

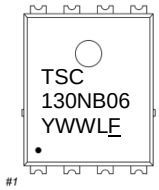

Y = Year Code
WW = Week Code (01~52)
L = Lot Code (1~9,A~Z)
F = Factory Code
_ = AEC-Q101 Qualified

Notice

Specifications of the products displayed herein are subject to change without notice. TSC or anyone on its behalf, assumes no responsibility or liability for any errors or inaccuracies.

Purchasers are solely responsible for the choice, selection, and use of TSC products and TSC assumes no liability for application assistance or the design of Purchasers' products.

Information contained herein is intended to provide a product description only. No license, express or implied, to any intellectual property rights is granted by this document. Except as provided in TSC's terms and conditions of sale for such products, TSC assumes no liability whatsoever, and disclaims any express or implied warranty, relating to sale and/or use of TSC products including liability or warranties relating to fitness for a particular purpose, merchantability, or infringement of any patent, copyright, or other intellectual property right.

The products shown herein are not designed for use in medical, life-saving, or life-sustaining applications. Customers using or selling these products for use in such applications do so at their own risk and agree to fully indemnify TSC for any damages resulting from such improper use or sale.

ENTEGRECİ

Bu belge www.entegreci.com üzerinden sunulmaktadır.

Elektronik komponent tedarikinde Entegreci

Entegreci, Eskişehir merkezli, Türkiye geneline satış yapan bir elektronik komponent mağazasıdır. Entegreler (IC), mikrodenetleyiciler, transistörler, diyotlar, pasif elemanlar, konnektörler, modüller ve geliştirme kartları tek adetten seri üretim adetlerine kadar satılır. Ürün sayfalarında güncel stok durumunu, fiyatı ve datasheet bağlantısını bulabilirsiniz.

Parça koduyla arama

Üretici parça numarasını yazın; stok ve fiyatı hemen görün.

www.entegreci.com

Ürün kategorileri

Entegreden kapasitöre tüm elektronik komponent kategorileri.

Kategorilere göz atın

Üreticiler

Aradığınız üreticinin ürünlerini tek sayfada inceleyin.

Üreticileri görün

Toplu alım ve teklif

Listede olmayan ya da yüksek adetli parçalar için teklif isteyin.

Teklif isteyin

www.entegreci.com | **destek@entegreci.com** | **0850 305 90 34**

Entegreci is an online electronic components store based in Türkiye. Search by manufacturer part number to see stock, prices and datasheets for integrated circuits, microcontrollers, transistors, passive components and connectors, or request a quote for parts that are not listed.

Bu sayfa Entegreci tarafından eklenmiştir. Belgenin önceki sayfaları asıl yayıncısına aittir ve içeriği değiştirilmemiştir; en güncel sürüm için belgenin yayıncısına başvurun.