TEA1755T

HV start-up DCM/QR flyback controller with integrated DCM/QR PFC controller

Rev. 1.1 — 13 March 2015 Product data sheet

1. General description

The GreenChip is the latest generation of green Switched Mode Power Supply (SMPS) controller ICs. The TEA1755T combines a controller for Power Factor Correction (PFC) and a flyback controller. Its high level of integration enables cost-effective power supply design using a very low number of external components.

The PFC operates in Quasi-Resonant (QR) or Discontinuous Conduction Mode (DCM), with valley switching.

The specially built-in green functions provide high efficiency at all power levels. At high power levels the flyback operates in QR mode or DCM with valley detection. At medium power levels, the flyback controller switches to Frequency Reduction (FR) mode and limits the peak current to an adjustable minimum value. In low power mode, the PFC switches off to maintain high efficiency. At very low power levels, when the flyback switching frequency drops below 25 kHz, the flyback converter switches to burst mode. During the non-switching phase of burst mode, the internal IC supply current is minimized to further optimize efficiency. Valley switching is used in all operating modes.

The advanced burst mode ensures high-efficiency at low power and good standby power performance while minimizing audible transformer noise.

The TEA1755T is a Multi-Chip Module, (MCM), containing two chips. The proprietary high-voltage BCD800 process makes direct start-up possible from the rectified universal mains voltage in an effective and green way. The second low voltage Silicon-On-Insulator (SOI) is used for accurate, high-speed protection functions and control.

The TEA1755T enables easy design of highly efficient and reliable supplies up to 250 W. These power supply designs are cost-effective, requiring the minimum number of external components.

Remark: All values in this document are typical values unless otherwise stated.

2. Features and benefits

2.1 Distinctive features

- Integrated PFC and flyback controller
- Universal mains supply operation between 70 V (AC) to 276 V (AC)
- Dual-boost PFC with accurate maximum output voltage (NXP Semiconductors patented)
- High level of integration, results in cost-effective designs with very low external component counts
- Adjustable PFC switch off delay
- External PFC switch on and switch off override
- Accurate PFC switch on and switch off control (NXP Semiconductors patent pending)

2.2 Green features

- On-chip start-up current source
- Reduced IC supply current during burst mode enabling ErP lot 6
- Power-down functionality for very low standby power

2.3 PFC green features

- Valley/Zero-Voltage Switching (ZVS) for minimum switching losses (NXP Semiconductors patented)
- Frequency limitation reduces switching losses
- PFC switched off when a low-load is detected at the flyback output

2.4 Flyback green features

- Valley switching for minimum switching losses (NXP Semiconductors patented)
- Frequency reduction with adjustable minimum peak current at low-power operation maintains high-efficiency at low output power levels
- Burst mode operation at very low-power levels for high-efficiency operation

2.5 Protection features

- Safe restart mode for system fault conditions
- Continuous mode protection using demagnetization detection for both converters (NXP Semiconductors patented)
- UnderVoltage Protection (UVP) (foldback during overload)
- Accurate OverVoltage Protection (OVP) for both converters (adjustable for flyback converter)
- Mains voltage independent OverPower Protection (OPP)
- Open control loop protection for both converters. The open-loop protection on the flyback converter is safe restart
- OverTemperature Protection (OTP)
- Low and adjustable OverCurrent Protection (OCP) trip level for both converters
- General-purpose input for latched protection, for use with system OverTemperature Protection (OTP)

All information provided in this document is subject to legal disclaimers.

© NXP Semiconductors N.V. 2015. All rights reserved.

3. Applications

- The device can be used in all applications requiring an efficient and cost-effective power supply solution for up to 250 W. Notebook adapters in particular benefit from the high level of integration

4. Ordering information

Table 1. Ordering information

Type number	Package		
	Name	Description	Version
TEA1755T/1	SO16	plastic small outline package; 16 leads; body width 3.9 mm	SOT109-1

5. Block diagram

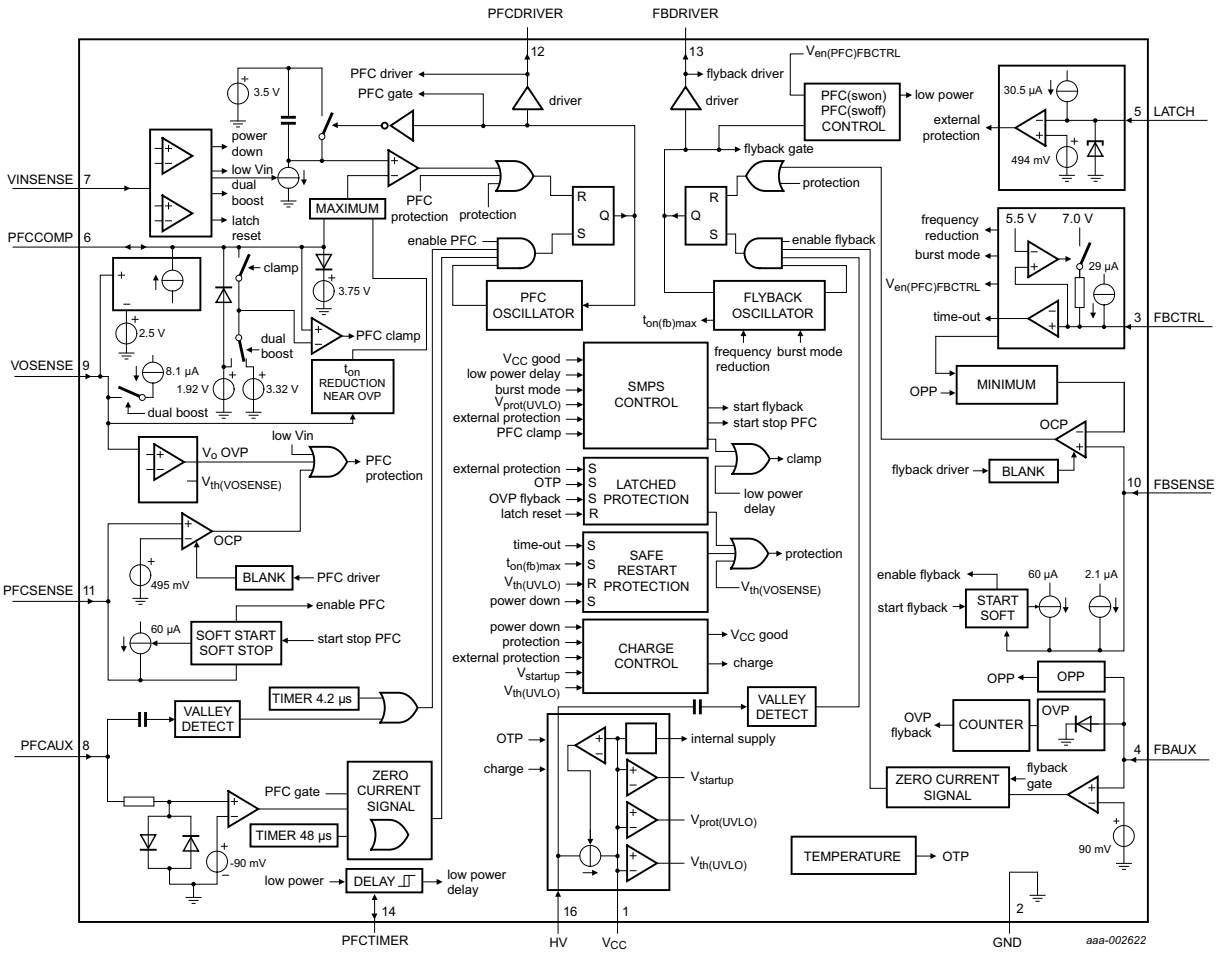

Fig 1. TEA1755T block diagram

All information provided in this document is subject to legal disclaimers.

© NXP Semiconductors N.V. 2015. All rights reserved.

6. Pinning information

6.1 Pinning

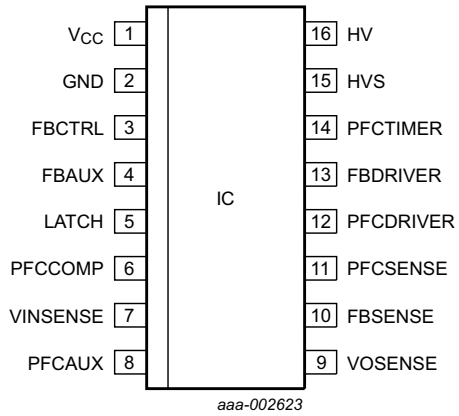

Fig 2. TEA1755T pin configuration (SOT109-1)

6.2 Pin description

Table 2. Pin description

Symbol	Pin	Description
V_{CC}	1	supply voltage
GND	2	ground
FBCTRL	3	flyback control input
FBAUX	4	auxiliary winding input for demagnetization timing and flyback OVP
LATCH	5	general-purpose protection input
PFCCOMP	6	PFC frequency compensation
VINSENSE	7	mains voltage sense input
PFCAUX	8	auxiliary winding input for demagnetization timing of the PFC
VOSENSE	9	sense input for PFC output voltage
FBSENSE	10	flyback current sense input
PFCSENSE	11	PFC current sense input
PFCDRIVER	12	PFC gate-driver output
FBDRIVER	13	flyback gate-driver output
PFCTIMER	14	PFC override and switch off delay timer
HVS	15	high-voltage safety spacer; not connected
HV	16	high-voltage start-up and flyback valley sensing

All information provided in this document is subject to legal disclaimers.

© NXP Semiconductors N.V. 2015. All rights reserved.

7. Functional description

7.1 General control

The TEA1755T contains a power factor correction circuit controller and a flyback circuit controller. A typical configuration is shown in Figure 3.

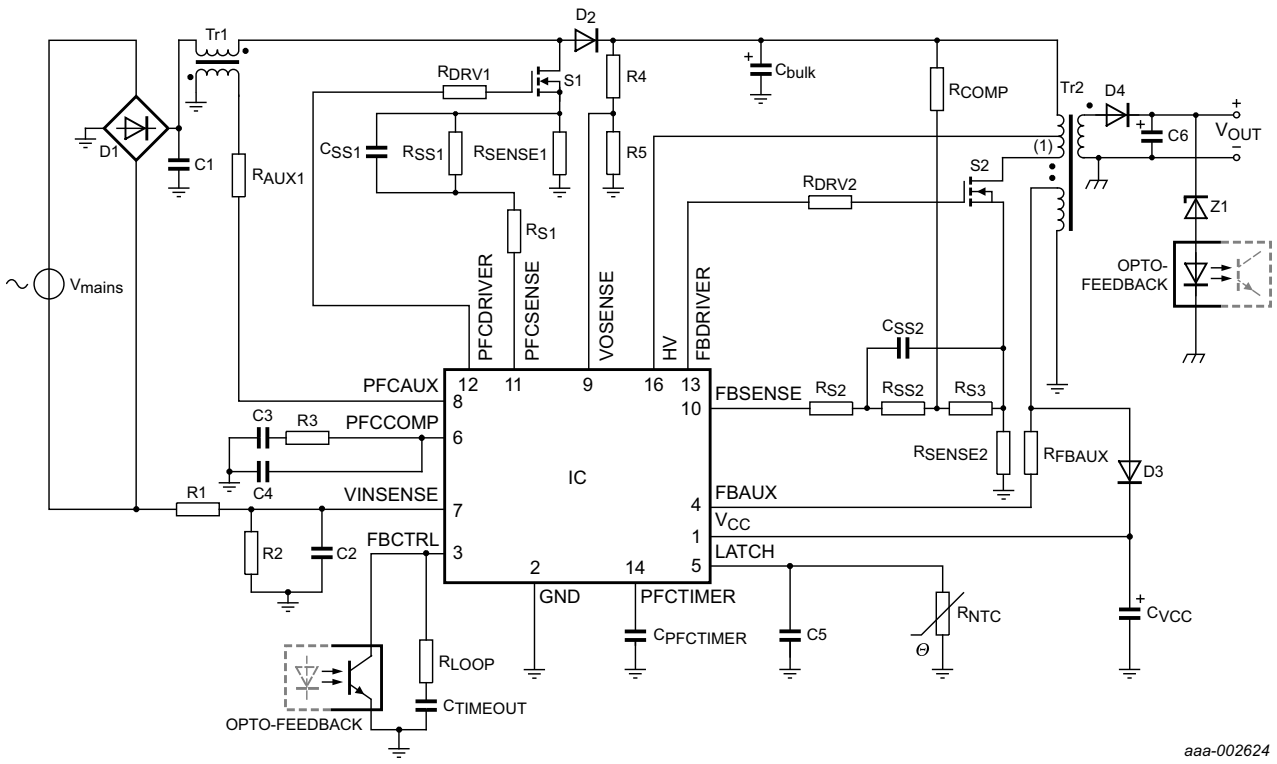

(1) The HV pin can either be connected to the center tap of the flyback transformer or to the drain of MOSFET S2.

Fig 3. A typical TEA1755T configuration

7.1.1 Start-up and UnderVoltage LockOut (UVLO)

Initially, the capacitor on the V_{CC} pin is charged from the high-voltage mains using the HV pin.

When V_{CC} is less than V_{trip}, the charge current is $I_{ch(low)}$. This low current protects the IC if the V_{CC} pin is shorted to ground. To ensure a short start-up time, the charge current above the V_{trip} level is increased to $I_{ch(high)}$, until V_{CC} reaches $V_{th(UVLO)}$. When V_{CC} is between $V_{th(UVLO)}$ and $V_{startup}$, the charge current goes low again to ensure a low safe restart duty cycle during fault conditions.

The control logic activates the internal circuitry and switches off the HV charge current when V_{CC} passes the $V_{startup}$ level. First, the LATCH pin current source is activated and the soft-start capacitors on the PFCSENSE and FBSENSE pins are charged. Also the clamp circuit on the PFCCOMP pin is activated.

The PFC circuit is activated when the following conditions are met:

All information provided in this document is subject to legal disclaimers.

© NXP Semiconductors N.V. 2015. All rights reserved.

- the LATCH pin voltage exceeds the $V_{en(LATCH)}$ voltage
- the PFCCOMP pin charging current drops below the absolute value of the $I_{en(PFCCOMP)}$ current
- the soft-start capacitor on the PFCSENSE pin is charged

The flyback converter is also activated if the soft-start capacitor on the FBSENSE pin is charged. The flyback converter output voltage is then regulated to its nominal output voltage. The auxiliary winding of the flyback converter takes over the IC supply. See Figure 4.

If during start-up, the LATCH pin does not reach the $V_{en(LATCH)}$ level before V_{CC} reaches $V_{th(UVLO)}$, the LATCH pin output is deactivated. The charge current is switched on again.

When the flyback converter is started, V_{FBCTRL} is monitored. If the output voltage does not reach its intended regulation level within a specified time, V_{FBCTRL} reaches the $V_{to(FBCTRL)}$ level. An error is then assumed and a safe restart is initiated.

When one of the safe restart or latched protection functions are triggered, both converters stop switching and the V_{CC} voltage drops to $V_{th(UVLO)}$. A latched protection recharges capacitor C_{VCC} using the HV pin, but does not restart the converters. To provide safe restart protection, the capacitor is recharged using the HV pin and the device restarts (see block diagram, Figure 1).

If OVP is triggered on the PFC circuit ($V_{VOSENSE} > V_{OVP(VOSENSE)}$), the PFC controller stops switching until the $V_{VOSENSE} < V_{OVP(VOSENSE)}$. If a mains UVP is detected, $V_{VINSENSE} < V_{stop(VINSENSE)}$, the PFC controller stops switching until $V_{VINSENSE} > V_{start(VINSENSE)}$ again.

When the V_{CC} pin voltage drops under the UVLO level, both controllers stop switching and enter safe restart mode. In the safe restart mode, the V_{CC} pin capacitor is recharged using the HV pin.

At very low burst mode repetition rates, V_{CC} can drop under the UVLO level. The UVLO protection feature $V_{prot(UVLO)}$ prevents the decrease when the IC is in burst mode.

All information provided in this document is subject to legal disclaimers.

© NXP Semiconductors N.V. 2015. All rights reserved.

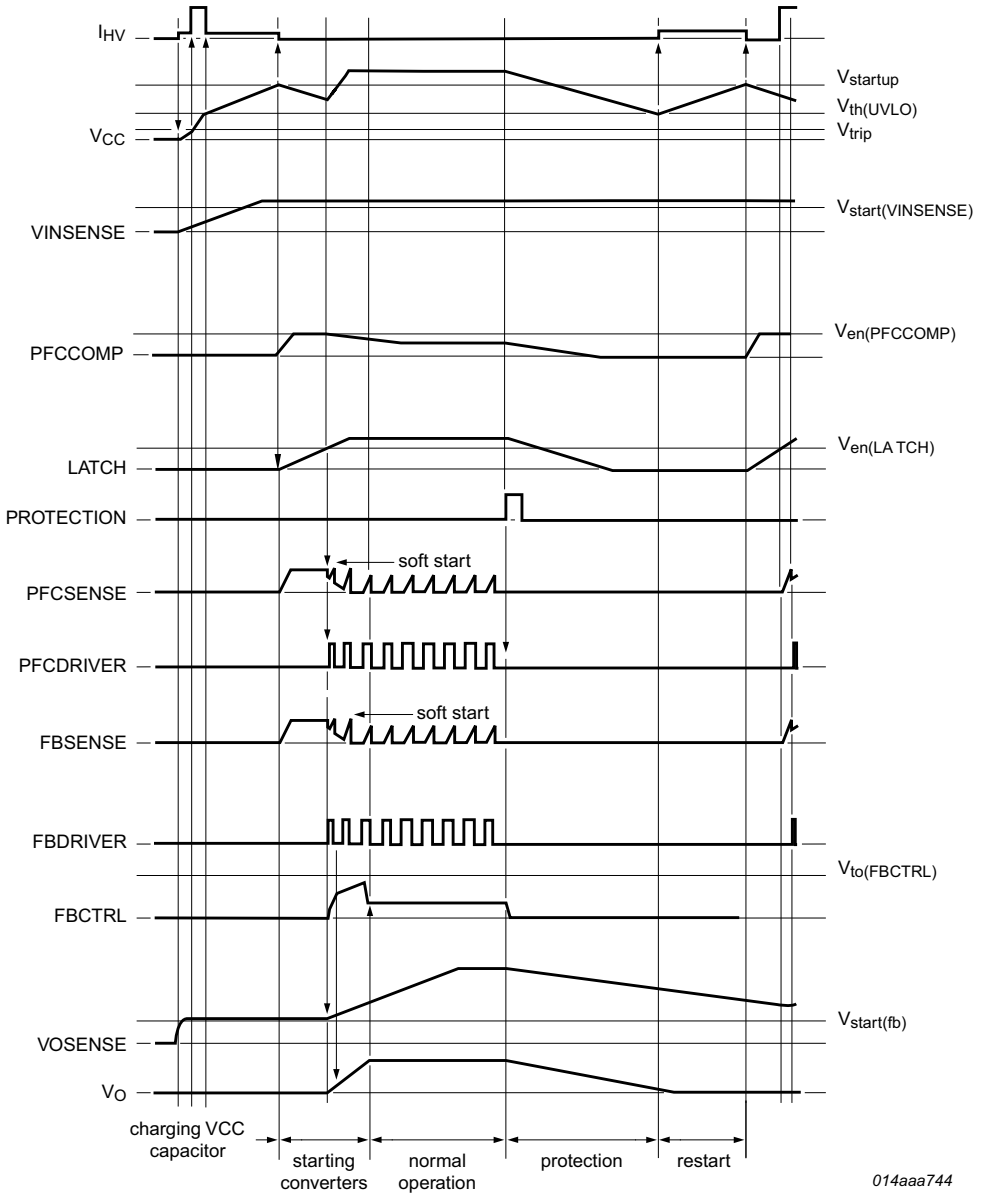

Fig 4. Start-up sequence, normal operation and restart sequence

7.1.2 Power-down mode

The power-down mode can be activated for very low standby power applications by pulling the $V_{VINSENSE} < V_{th(pd)}$ level. The TEA1755T stops switching and safe restart protection is activated. The high voltage start-up current source is also disabled during power-down and the TEA1755T does not restart until $V_{VINSENSE}$ is raised again.

During Power-down mode, all internal circuitry is disabled except for a voltage detection circuit on the VINSENSE pin. This circuit is supplied by the HV pin and draws 12 μA from the HV pin for biasing.

All information provided in this document is subject to legal disclaimers.

© NXP Semiconductors N.V. 2015. All rights reserved.

7.1.3 Supply management

All internal reference voltages are derived from a temperature compensated and trimmed on-chip band gap circuit. Internal reference currents are derived from a temperature compensated and trimmed on-chip current reference circuit.

7.1.4 Latch input

The LATCH pin is a general-purpose input pin which is used to switch off both converters. The pin sources a current $I_{O(LATCH)}$ of 30.5 μA. Switching of both converters is stopped when V_{LATCH} is < 494 mV.

At initial start-up, switching is prevented until the capacitor on the LATCH pin is charged above 582 mV. No internal filtering is performed on this pin. An internal 1.75 V clamp protects the pin from excessive voltages.

7.1.5 Fast latch reset

In a typical application, the mains can be interrupted briefly to reset the latched protection. The bulk capacitor C_{bulk} does not have to discharge for this latched protection to reset.

When the VINSENSE voltage drops below 750 mV and is then raised to 860 mV, the latched protection is reset.

The latched protection is also reset by removing both the voltage on the V_{CC} and HV pins.

7.1.6 Overtemperature protection

An accurate internal temperature protection is provided in the IC. When the junction temperature exceeds the thermal shut-down temperature, the IC stops switching. While OTP is active, the capacitor C_{VCC} is not recharged from the HV mains. If the V_{CC} supply voltage is not sufficient, the OTP circuit is supplied from the HV pin.

OTP is a latched protection. It is reset by removing the voltage from both the V_{CC} and HV pins or by the fast latch reset function (see Section 7.1.5).

7.2 Power factor correction circuit

The Power Factor Correction (PFC) circuit operates in Quasi-Resonant (QR) or Discontinuous Conduction Mode (DCM) with valley switching. The next primary stroke is only started when the previous secondary stroke has ended and the voltage across the PFC MOSFET has reached the minimum value.

V_{PFCAUX} is used to detect transformer demagnetization and the minimum voltage across the external PFC MOSFET switch.

7.2.1 t_{on} control (PFCCOMP pin)

The power factor correction circuit is operated in t_{on} control. The resulting mains harmonic reduction is well within the class-D requirements.

$V_{PFCCOMP}$ determines the on-time of the PFC. The $V_{VOSENSE}$ is the transconductance amplifier input which outputs current to the PFCCOMP pin. The regulation $V_{VOSENSE}$ = 2.5 V. The network connected to the PFCCOMP pin and the transconductance amplifier determine the dynamic behavior of the PFC control.

All information provided in this document is subject to legal disclaimers.

© NXP Semiconductors N.V. 2015. All rights reserved.

Operating near the PFC OVP level causes the PFC stage on-time to decrease rapidly to zero.

To reduce the response time, in case of load variation, the PFCCOMP pin is clamped to a minimum level of 2 V during PFC operation. Clamping prevents the on-time increasing too much and improves the PFC response time when the load decreases again.

7.2.2 Valley switching and demagnetization (PFCAUX pin)

The PFC MOSFET is switched on after the transformer is demagnetized. Internal circuitry connected to the PFCAUX pin detects the end of the secondary stroke. It also detects the voltage across the PFC MOSFET. To reduce switching losses and ElectroMagnetic Interference (EMI), the next stroke is started when the voltage across the PFC MOSFET is at its minimum (valley switching).

If a demagnetization signal is not detected on the PFCAUX pin, the controller generates a Zero-Current Signal (ZCS) 48 μs after the last PFC MOSFET gate signal.

If valley signal is not detected on the PFCAUX pin, the controller generates a valley signal 4.2 μs after demagnetization is detected.

To protect the internal circuitry during, for example, lightning events, add a 5 kΩ series resistor to the PFCAUX pin. To prevent incorrect switching due to external interference, place the resistor close to the IC on the PCB.

7.2.3 Frequency limitation

To optimize the transformer and minimize switching losses, the switching frequency is limited to $f_{sw(PFC)max}$. If the frequency for quasi-resonant operation is above the $f_{sw(PFC)max}$ limit, the system switches to DCM. The PFC MOSFET is only switched on at a minimum voltage across the switch (valley switching).

7.2.4 Mains voltage compensation (VINSENSE pin)

The equation for the transfer function of a power factor corrector contains the square of the mains input voltage. In a typical application, this results in a low bandwidth for low mains input voltages. At high mains input voltages, the Mains Harmonic Reduction (MHR) requirements are hard to meet.

To compensate for the influence of the mains input voltage, the TEA1755T contains a correction circuit. The average input voltage is measured using the VINSENSE pin and the information is fed to an internal compensation circuit. Using this compensation, it is possible to keep the regulation loop bandwidth constant over the mains input range. This feature gives a fast transient response on load steps while still complying with class-D MHR requirements.

In a typical application, a resistor and two capacitors connected to the PFCCOMP pin set the regulation loop bandwidth.

7.2.5 Soft-start (PFCSENSE pin)

To prevent audible transformer noise at start-up or during hiccup, the soft-start function slowly increases the transformer peak current. Place a capacitor C_{SS1} in parallel with resistor R_{SS1} (see Figure 5) to implement a soft-start function. An internal current source charges the capacitor to:

All information provided in this document is subject to legal disclaimers.

© NXP Semiconductors N.V. 2015. All rights reserved.

$$V_{PFCSENSE} = I_{start(soft)PFC} \times R_{SS1} \quad (1)$$

The voltage is limited to $V_{start(soft)PFC}$.

The start level and time constant of the increasing primary current level is externally adjusted by changing the R_{SS1} and C_{SS1} values.

$$\tau soft\text{–}start = 3 \times R_{SS1} \times C_{SS1} \quad (2)$$

The charging current $I_{start(soft)PFC}$ flows while the PFCSENSE pin voltage is < 0.5 V. If $V_{PFCSENSE}$ exceeds 0.5 V, the soft-start current source starts limiting current $I_{start(soft)PFC}$. When the PFC starts switching, the $I_{start(soft)PFC}$ current source is switched off; see Figure 5.

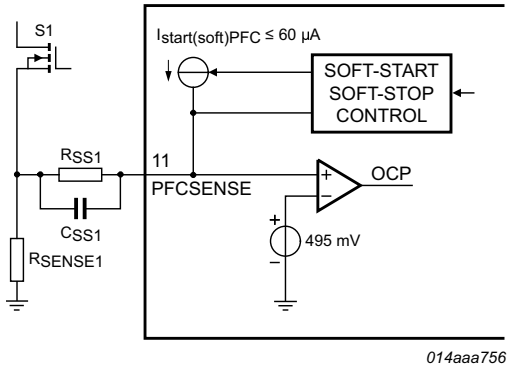

Fig 5. Soft-start of the PFC

7.2.6 PFC switch on/switch off control

When the flyback converter output power (see Section 7.3) is low, the flyback converter switches to FR mode. When the switching frequency of the flyback in FR mode < $f_{sw(fb)swoff(PFC)}$ (53 kHz), the PFC circuit is switched off to maintain high efficiency. Connect a capacitor to the PFCTIMER pin (see Section 7.2.7) to delay the PFC switching off.

During low-power mode operation, the PFCCOMP pin is clamped to a minimum voltage of 3.32 V or 1.92 V and a maximum voltage of 3.75 V. The lower clamp voltage depends on $V_{VINSENSE}$. This voltage limits the maximum power that is delivered when the PFC is switched on again. The upper clamp voltage ensures that the PFC returns from low-power mode to its normal regulation point in a limited time.

In FR mode, when the flyback converter switching frequency exceeds $f_{sw(fb)swon(PFC)}$ (73 kHz), the PFC circuit is switched on. If the flyback converter duty cycle is > 50 % or V_{FBCTRL} is > 3.75 V, the PFC circuit is also switched on.

7.2.7 PFC switch off delay (PFCTIMER pin)

When the flyback converter switching frequency in FR mode is < $f_{sw(fb)swoff(PFC)}$ (53 kHz), the IC then outputs a 4.7 µA current to the PFCTIMER pin. When $V_{PFCTIMER}$ reaches 3 V, the PFC is switched off by performing a soft-stop.

All information provided in this document is subject to legal disclaimers.

© NXP Semiconductors N.V. 2015. All rights reserved.

A switch discharges the PFCTIMER pin capacitor when the flyback controller operating frequency is > $f_{sw(fb)swon(PFC)}$ (73 kHz). At the same moment, the PFC stage is also switched on.

Connect a capacitor to the PFCTIMER pin (see Section 7.2.7) to prevent the PFC from switching off due to a dynamic load that leads to repetitive crossing of $f_{sw(fb)swoff(PFC)}$ and $f_{sw(fb)swon(PFC)}$. A 1 nF minimum capacitor value is recommended to prevent noise influencing the PFC switch on/ switch off behavior.

The PFCTIMER pin capacitor is also discharged when the flyback maximum switching frequency is higher than 53 kHz. This feature prevents PFC on/off toggling during dynamic loads causing the flyback to operate repetitively near $f_{sw(fb)swoff(PFC)}$ and $f_{sw(fb)swon(PFC)}$.

It is also possible to control PFC switch-on and switch off externally. When $V_{PFCTIMER}$ is driven below 1.03 V, the PFC stage is on. When the PFCTIMER pin voltage is driven above 4.4 V, the PFC stage is switched off. The external control overrides the PFC stage control by the flyback controller (see Figure 6).

The PFCTIMER pin has an internal clamp circuit starting around 10 V with a current capability of 0.1 mA

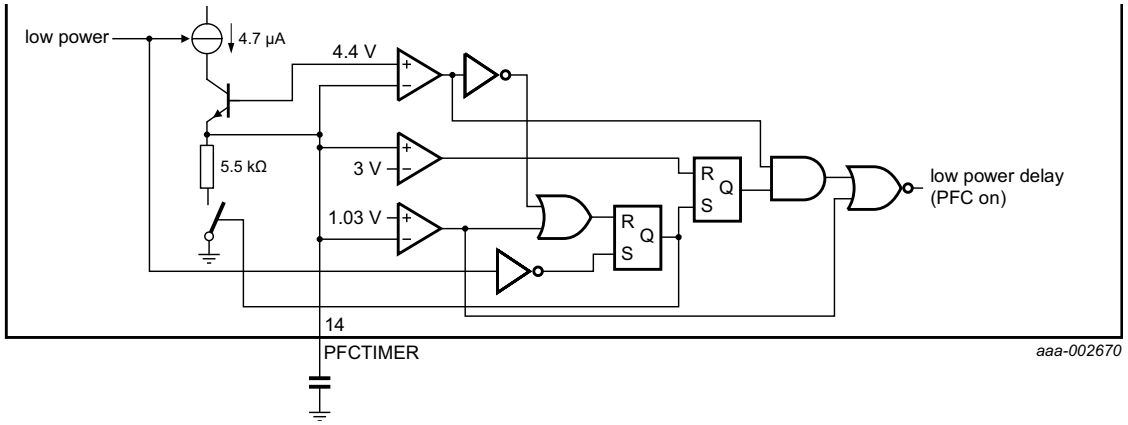

Fig 6. PFC switch on and switch off using the PFCTIMER pin

7.2.8 Dual-boost PFC

The mains input voltage modulates the PFC output voltage. The mains input voltage is measured using the VINSENSE pin. If $V_{VINSENSE}$ < 2.28 V, the current is sourced from the VOSENSE pin. To ensure switch-over is stable, the current reaches its absolute maximum value for $V_{VINSENSE}$ < 2.08 V, see Figure 7.

At low VINSENSE input voltages, the output current is 8.1 µA. This output current, in combination with the resistors on the VOSENSE pin, sets the lower PFC output voltage level at low mains voltages. At high mains input voltages, the current is switched to zero. The PFC output voltage is then at its maximum. As this current is zero in this situation, it does not affect the accuracy of the PFC output voltage.

To ensure a correct switch-off of the application, the VOSENSE current switches to its maximum value of 8.1 µA when $V_{VOSENSE}$ drops below 2.1 V.

All information provided in this document is subject to legal disclaimers.

© NXP Semiconductors N.V. 2015. All rights reserved.

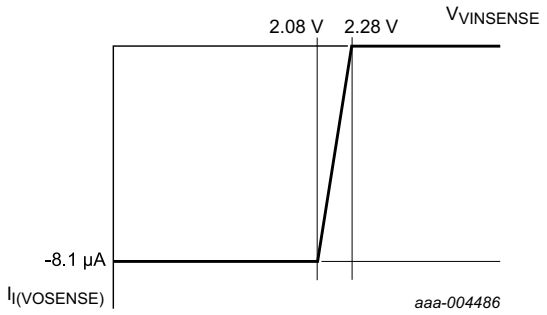

Fig 7. Voltage to current transfer function for dual-boost PFC

7.2.9 Overcurrent protection (PFCSENSE pin)

The maximum peak current is limited cycle-by-cycle by sensing the voltage across an external sense resistor, R_{SENSE1}, on the source of the external MOSFET. The voltage is measured using the PFCSENSE pin.

7.2.10 Mains undervoltage lockout/brownout protection (VINSENSE pin)

To prevent the PFC from operating at very low mains input voltages, $V_{VINSENSE}$ is sensed continuously. When $V_{VINSENSE}$ drops below the $V_{stop(VINSENSE)}$ level, switching of the PFC is stopped.

7.2.11 Overvoltage protection (VOSENSE pin)

To prevent output overvoltage during load steps and mains transients, an overvoltage protection circuit is built in.

When $V_{VOSENSE}$ exceeds the $V_{OVP(VOSENSE)}$ level, switching of the PFC circuit is prevented. Switching of the PFC restarts when the VOSENSE pin voltage drops below the $V_{OVP(VOSENSE)}$ level again.

OVP is also triggered when the resistor between the VOSENSE pin and ground is open.

7.2.12 PFC open-loop protection (VOSENSE pin)

The PFC circuit does not start switching until the $V_{VOSENSE}$ pin is greater than the $V_{th(ol)(VOSENSE)}$ level. This feature protects the application from open-loop and VOSENSE short-circuit situations.

7.2.13 Driver (PFCDRIVER pin)

The driver circuit to the gate of the power MOSFET has a current sourcing capability of 500 mA at 2 V on the PFCDRIVER pin and a current sink capability of 1.2 A at 10 V on the PFCDRIVER pin. These capabilities ensure fast switch-on and switch-off of the power MOSFET for efficient operation.

7.3 Flyback controller

The TEA1755T includes a controller for a flyback converter. The flyback converter operates in quasi-resonant, discontinuous conduction mode or burst mode with valley switching. The auxiliary winding of the flyback transformer provides demagnetization detection and powers the IC after start-up.

All information provided in this document is subject to legal disclaimers.

© NXP Semiconductors N.V. 2015. All rights reserved.

7.3.1 Multimode operation

The TEA1755T flyback controller can operate in several modes; see Figure 8.

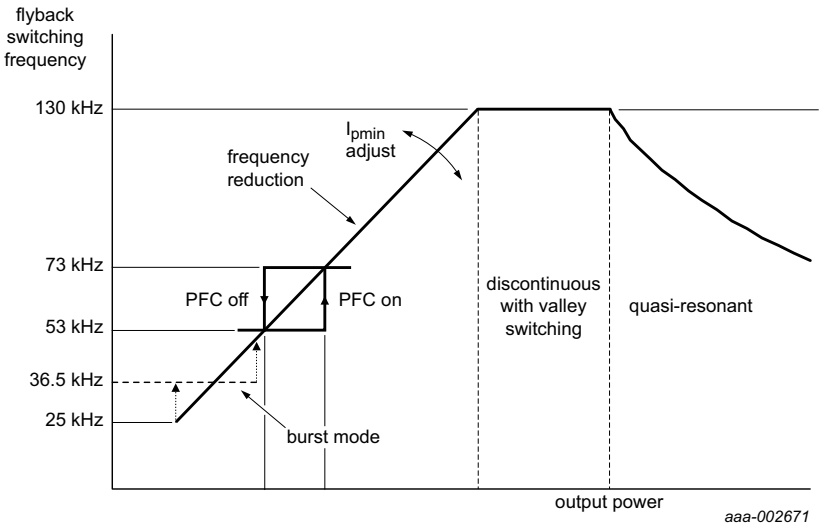

Fig 8. Multimode operation flyback

At high output power the converter switches to quasi-resonant mode. The next converter stroke starts after demagnetization of the transformer and detection of the valley. In quasi-resonant mode switching losses are minimized. This minimization is achieved by the converter only switching on when the voltage across the external MOSFET is at its minimum (see Section 7.3.2).

Valley switching is active in all operating modes.

To prevent high frequency operation at lower loads, the quasi-resonant operation switches to discontinuous mode operation with valley skipping. When the frequency limit is reached, the quasi-resonant operation changes to DCM with valley skipping. The frequency limit reduces the MOSFET switch-on losses and conducted EMI.

At medium power levels, the controller enters Frequency Reduction (FR) mode. A Voltage Controlled Oscillator (VCO) controls the frequency. The minimum frequency in this mode is reduced to approximately 25 kHz. During frequency reduction mode, the primary peak current is kept at an adjustable minimal level to maintain a high efficiency. Valley switching is also active in this mode.

At very low power and standby levels, for which the switching frequency would drop below 25 kHz, the converter enters the burst mode. In burst mode, the switching frequency is 36.5 kHz. The primary peak current is fixed in burst mode.

In frequency reduction mode, the PFC controller switches off as soon as the flyback switching frequency drops below 53 kHz. The flyback maximum frequency changes linearly with the control V_{FBCTRL} (see Figure 9). Hysteresis is added to ensure a stable PFC switch-on and switch-off. In no-load operation, the switching frequency is reduced to (almost) zero.

All information provided in this document is subject to legal disclaimers.

© NXP Semiconductors N.V. 2015. All rights reserved.

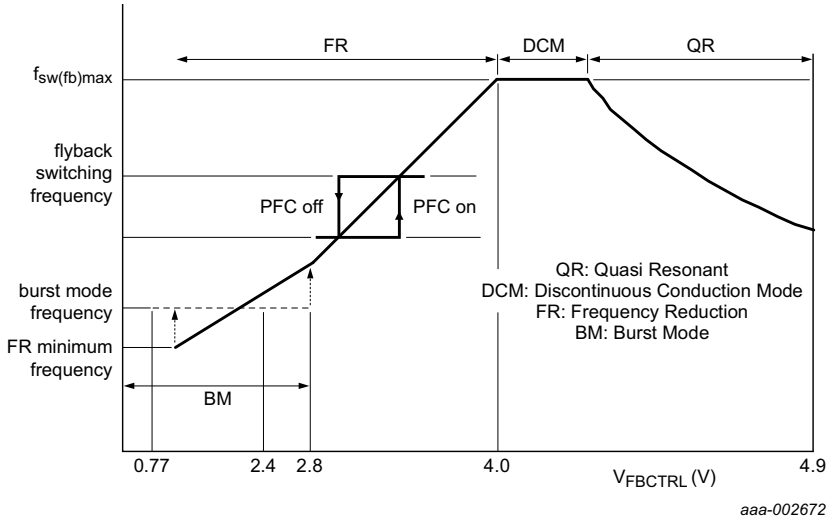

Fig 9. Flyback frequency control

7.3.2 Valley switching (HV pin)

A new cycle starts when the external MOSFET is switched on. $V_{FBSENSE}$ and V_{FBCTRL} determine the on-time. The MOSFET is then switched off and the secondary stroke starts (see Figure 10). After the secondary stroke, the drain voltage shows an oscillation with a frequency of approximately:

$$f = \frac{1}{[2 \times \pi \times \sqrt{(L_p \times C_d)}]} \quad (3)$$

where L_p is the primary self-inductance of the flyback transformer and C_d is the capacitance on the drain node.

When the secondary stroke ends and the internal oscillator voltage is high again, the circuit waits for the lowest drain voltage before starting a new primary stroke.

Figure 10 shows the drain voltage, valley signal, secondary stroke signal and the internal oscillator signal.

Valley switching allows high frequency operation because capacitive switching losses are reduced (see Equation 4). High frequency operation makes small and cost-effective magnetic components possible.

$$P = \frac{1}{2} \times C_d \times V^2 \times f \quad (4)$$

All information provided in this document is subject to legal disclaimers.

© NXP Semiconductors N.V. 2015. All rights reserved.

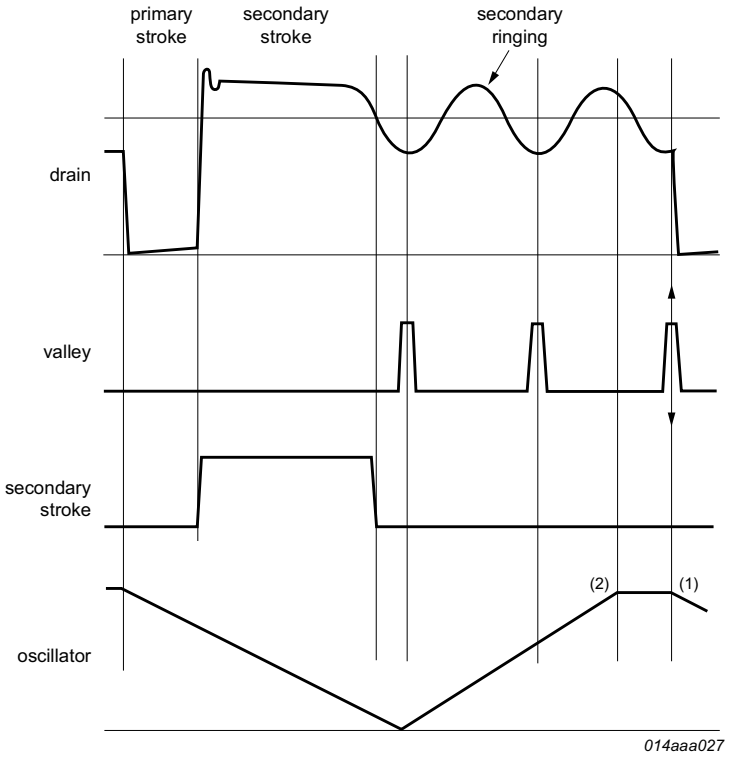

(1) Start of a new cycle at lowest drain voltage.

(2) Start of a new cycle in a classical Pulse-Width Modulation (PWM) system without valley detection.

Fig 10. Signals for valley switching

7.3.3 Current mode control (FBSENSE pin)

Current mode control is used for the flyback converter because of its good line regulation.

The FBSENSE pin senses the primary current across an external resistor and compares it to an internal control voltage. The internal control voltage is proportional to V_{FBCTRL} (see Figure 11).

The FBSENSE pin outputs a current of 2.1 μA. This current runs through the resistors from the FBSENSE pin to the sense resistor R_{SENSE} and creates an offset voltage. The minimum flyback peak current is adjusted using this offset voltage. Adjusting the minimum peak current level, changes the frequency reduction slope (see Figure 8).

All information provided in this document is subject to legal disclaimers.

© NXP Semiconductors N.V. 2015. All rights reserved.

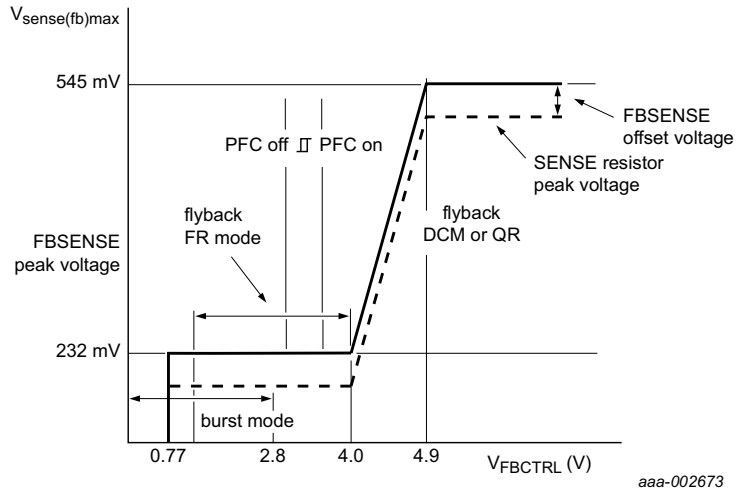

Fig 11. Flyback part peak current control

7.3.4 Demagnetization (FBAUX pin)

The system is always in QR or DCM. The internal oscillator does not start a new primary stroke until the previous secondary stroke has ended.

Demagnetization features a cycle-by-cycle output short-circuit protection by immediately lowering the frequency (longer off-time) and reducing the power level.

Demagnetization recognition is suppressed during the first $t_{sup(xfmr_ring)}$ time of 2.2 μs. This suppression can be necessary at low output voltages, during start-up and in applications where the transformer has a large leakage inductance.

If the FBAUX pin is open-circuit or not connected, a fault condition is assumed and the converter immediately stops. Operation restarts when the fault condition is removed.

7.3.5 Flyback control/time-out (FBCTRL pin)

The FBCTRL pin is connected to an internal voltage source of 7 V using an internal 13.2 kΩ resistor. When V_{FBCTRL} > 5.5 V, the resistor is disconnected. The pin is biased with a 29 μA current. When V_{FBCTRL} > 7.75 V, a fault is assumed, switching is stopped and a restart is made.

If a capacitor and resistor are connected in series to the pin, a time-out function is created which protects against open control loop situations. See Figure 12 and Figure 13. The time-out function is disabled by connecting a resistor (200 kΩ) to ground on the FBCTRL pin.

If the pin is short-circuited to ground, switching of the flyback controller is stopped.

Under normal operating conditions, the converter regulates the output voltage. V_{FBCTRL} varies between 0.77 V at minimum output power and 4.9 V at maximum output power.

All information provided in this document is subject to legal disclaimers.

© NXP Semiconductors N.V. 2015. All rights reserved.

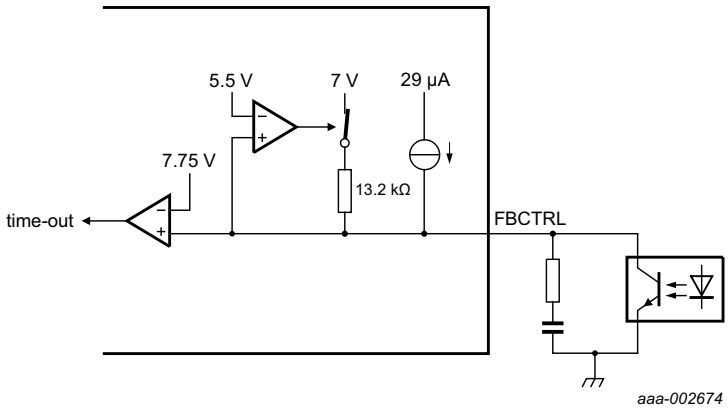

Fig 12. Time-out protection circuit

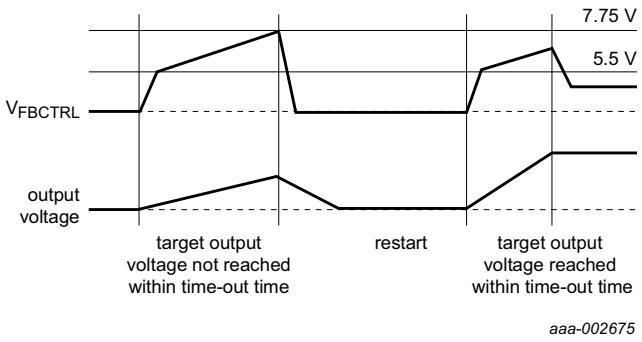

Fig 13. TEA1755T time-out protection (signals) and safe restart

7.3.6 Burst mode operation (FBCTRL pin)

The flyback controller enters the burst mode when the output power is very low and the switching frequency is < 25 kHz. In burst mode, the flyback converter switching frequency is 36.5 kHz. The minimum flyback sense voltage of 232 mV, in combination with an offset voltage (see Section 7.3.3), determines the peak current.

A burst cycle starts when one of the following is made:

- $V_{FBCTRL} > 2.4$ V
- $V_{CC} < V_{prot(UVLO)}$. This voltage level is typically 0.8 V > $V_{th(UVLO)}$

The burst cycle is stopped when $V_{FBCTRL} < 0.77$ V.

In burst mode, the internal IC supply current is reduced to improve the no-load and low-load input power.

The burst mode is exited and normal operation resumes when the $V_{FBCTRL} > 2.8$ V (see Figure 14).

All information provided in this document is subject to legal disclaimers.

© NXP Semiconductors N.V. 2015. All rights reserved.

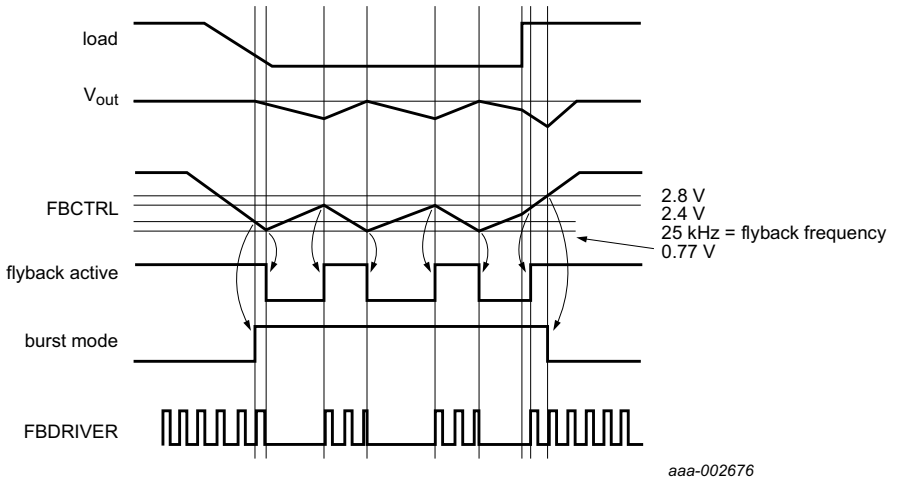

Fig 14. Burst mode operation

7.3.7 Soft-start (FBSENSE pin)

To prevent audible transformer noise during start-up, the soft-start function slowly increases the transformer peak current. Place a capacitor C_{SS2} in parallel with resistor R_{SS2} (see Figure 15) to implement the soft-start function.

An internal current source charges the capacitor to:

$$V = I_{start(soft)fb} \times R_{SS2} \quad (5)$$

with a maximum of 0.55 V.

The start level and the time constant of the increasing primary current level can be adjusted externally by changing the values of R_{SS2} and C_{SS2}.

$$\tau soft\text{–}start = 3 \times R_{SS2} \times C_{SS2} \quad (6)$$

The soft-start current $I_{start(soft)fb}$ switches on when V_{CC} reaches $V_{startup}$. When the $V_{FBSENSE}$ reaches 0.55 V, the flyback converter starts switching.

The charging current $I_{start(soft)fb}$ flows when the $V_{FBSENSE}$ is < 0.55 V. If $V_{FBSENSE}$ exceeds 0.55 V, the soft-start current source starts limiting the current. After the flyback converter has started, the soft-start current source is switched off.

When the IC is operating in the burst mode, the soft-start function is switched off.

All information provided in this document is subject to legal disclaimers.

© NXP Semiconductors N.V. 2015. All rights reserved.

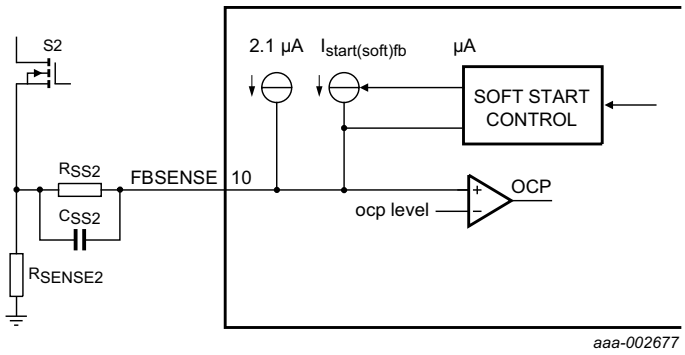

Fig 15. Flyback soft-start

7.3.8 Maximum on-time

The flyback controller limits the on-time of the external MOSFET to 38.5 µs. When the on-time is longer than 38.5 µs, the IC stops switching and enters the safe restart state.

7.3.9 Overvoltage protection (FBAUX pin)

An output OVP is implemented in the GreenChip series. In the TEA1755T, the auxiliary voltage is sensed using the current flowing into the FBAUX pin during the secondary stroke. The auxiliary winding voltage is a well-defined replica of the output voltage. An internal filter averages voltage spikes.

An internal up-down counter prevents false OVP detection which can occur during ESD or lightning events. The internal counter counts up by one when the output voltage exceeds the OVP trip level within one switching cycle. The internal counter counts down by two when the output voltage has not exceeded the OVP trip level in one switching cycle. When the counter has reached six, the IC assumes a true overvoltage, sets the latched protection and switches off both converters.

The converter only restarts after the OVP latch is reset. In a typical application, the internal latch is reset when the VINSENSE voltage drops below 750 mV and is then raised to 860 mV. The latched protection is also reset by removing both the V_{CC} and V_{HV}.

The demagnetization resistor, R_{FBAUX} sets the output voltage $V_{o(OVP)}$ at which the OVP function trips:

$$V_{o(OVP)} = \frac{N_s}{N_{aux}}(I_{ovp(FBAUX)} \times R_{FBAUX} + V_{clamp(FBAUX)}) \quad (7)$$

where N_s is the number of secondary winding and N_{aux} is the number of auxiliary winding of the transformer. Current $I_{ovp(FBAUX)}$ is internally trimmed.

Accurate OVP detection is made possible by adjusting the value of R_{FBAUX} to the turns ratio of the transformer.

All information provided in this document is subject to legal disclaimers.

© NXP Semiconductors N.V. 2015. All rights reserved.

7.3.10 Overcurrent protection (FBSENSE pin)

The primary peak current in the transformer is measured accurately cycle-by-cycle using the external sense resistor R_{sense2}. The OCP circuit limits $V_{FBSENSE}$ to a level set by V_{FBCTRL} (see also Section 7.3.3). The OCP detection is suppressed during the leading-edge blanking period, t_{leb} (equals $t_{on(fb)min} - t_{d(FBDRIVER)}$), to prevent false triggering due to switch-on spikes.

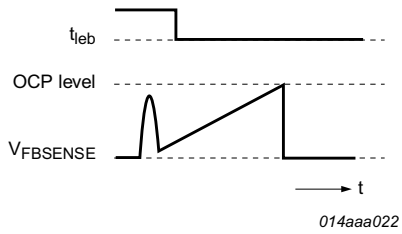

Fig 16. OCP leading-edge blanking

7.3.11 Overpower protection

During the flyback converter primary stroke, the flyback converter input voltage is measured by sensing the current that is drawn from the FBAUX pin.

The current information is used to limit the maximum flyback converter peak current and is measured using the FBSENSE pin. The internal compensation is such, that a maximum output power is obtained which is almost independent of the input voltage.

The OPP curve is given in Figure 17.

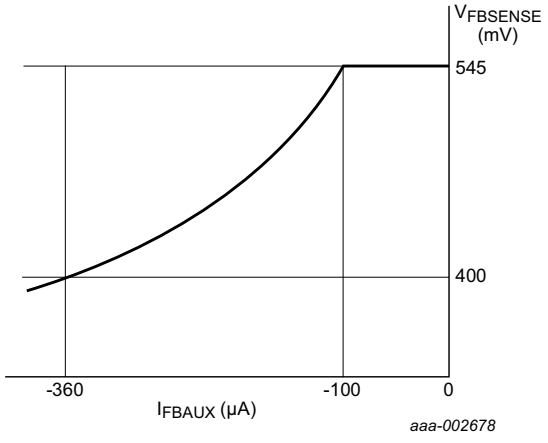

Fig 17. Overpower protection curve

7.3.12 Driver (FBDRIVER pin)

The driver circuit for the external power MOSFET gate has a current sourcing capability of 500 mA at 2 V on the FBDRIVER pin and a current sink capability of 1.2 A at 10 V on the FBDRIVER pin. These capabilities ensure fast switch-on and switch-off of the power MOSFET for efficient operation.

All information provided in this document is subject to legal disclaimers.

© NXP Semiconductors N.V. 2015. All rights reserved.

8. Limiting values

Table 3. Limiting values

In accordance with the Absolute Maximum Rating System (IEC 60134).

Symbol	Parameter	Conditions		Min	Max	Unit
Voltages						
V_{CC}	supply voltage			–0.4	+38	V
V_{LATCH}	voltage on pin LATCH	current limited		–0.4	+10	V
V_{FBCTRL}	voltage on pin FBCTRL			–0.4	+9	V
$V_{PFCCOMP}$	voltage on pin PFCCOMP			–0.4	+5	V
$V_{VINSENSE}$	voltage on pin VINSENSE	current limited		–0.4	+10	V
$V_{VOSENSE}$	voltage on pin VOSENSE	current limited		–0.4	+10	V
V_{PFCAUX}	voltage on pin PFCAUX			–25	+25	V
$V_{FBSENSE}$	voltage on pin FBSENSE	current limited		–0.4	+5	V
$V_{PFCSENSE}$	voltage on pin PFCSENSE	current limited		–0.4	+5	V
$V_{PFCTIMER}$	voltage on pin PFCTIMER	current limited		–0.4	+10	V
V_{HV}	voltage on pin HV			–0.4	+650	V
Currents						
I_{FBCTRL}	current on pin FBCTRL			–3	0	mA
I_{FBAUX}	current on pin FBAUX			–1	+1	mA
$I_{PFCSENSE}$	current on pin PFCSENSE			–1	+10	mA
$I_{FBSENSE}$	current on pin FBSENSE			–1	+10	mA
$I_{FBDRIVER}$	current on pin FBDRIVER	δ < 10 %		–0.8	+2	A
$I_{PFCDRIVER}$	current on pin PFCDRIVER	δ < 10 %		–0.8	+2	A
I_{HV}	current on pin HV	during start-up and restart		-	8	mA
		δ = 3 % due to dV/dt on HV pin		–15	+30	mA
General						
P_{tot}	total power dissipation	T_{amb} < 75 °C		-	0.6	W
T_{stg}	storage temperature			–55	+150	°C
T_j	junction temperature			–40	+155	°C
ESD						
V_{ESD}	electrostatic discharge voltage	human body model				
		pins 1 to 14	[1]	–2	+2	kV
		pin 16 (HV)	[1]	–2	+2	kV
		charged device model		–500	+500	V

[1] Equivalent to discharging a 100 pF capacitor through a 1.5 kΩ series resistor.

All information provided in this document is subject to legal disclaimers.

© NXP Semiconductors N.V. 2015. All rights reserved.

9. Thermal characteristics

Table 4. Thermal characteristics

Symbol	Parameter	Conditions		Typ	Unit
$R_{th(j-a)}$	thermal resistance from junction to ambient	in free air; JEDEC test board		127	K/W
$R_{th(j-c)}$	thermal resistance from junction to case	in free air; JEDEC test board		36	K/W

10. Characteristics

Table 5. Characteristics

T_{amb} = 25 °C; V_{CC} = 20 V; all voltages are measured with respect to ground (pin 2); currents are positive when flowing into the IC; unless otherwise specified.

Symbol	Parameter	Conditions		Min	Typ	Max	Unit
Start-up current source (HV pin)							
I_{HV}	current on pin HV	V_{HV} > 75 V					
		$V_{CC} < V_{trip}$		0.9	1.1	1.3	mA
		$V_{th(UVLO)} < V_{CC} < V_{startup}$		0.8	1	1.2	mA
		$V_{trip} < V_{CC} < V_{th(UVLO)}$		4	5	6	mA
		with auxiliary supply		-	-	1.5	µA
		in Power-down mode; V_{CC} = 0 V		5	12	25	µA
V_{BR}	breakdown voltage			650	-	-	V
Supply voltage management (V_{CC} pin)							
V_{trip}	trip voltage			0.5	0.6	0.7	V
$V_{startup}$	start-up voltage			21.3	22.3	23.3	V
$V_{th(UVLO)}$	undervoltage lockout threshold voltage			12.4	13.4	14.4	V
V_{hys}	hysteresis voltage	$V_{startup} - V_{th(UVLO)}$		8.3	8.9	9.5	V
$V_{prot(UVLO)}$	undervoltage lockout protection voltage			-	$V_{th(UVLO)}$ + 0.8	-	V
$I_{ch(low)}$	low charging current	V_{HV} > 75 V					
		$V_{CC} < V_{trip}$		–1.15	–1	–0.85	mA
		$V_{th(UVLO)} < V_{CC} < V_{startup}$		–1.05	–0.9	–0.75	mA
$I_{ch(high)}$	high charging current	V_{HV} > 75 V; $V_{trip} < V_{CC} < V_{th(UVLO)}$		–5.8	–4.9	–4	mA
$I_{CC(oper)}$	operating supply current	no-load on pins FBDRIVER and PFCDRIVER; V_{FBCTRL} = 5 V; $f_{FB} = f_{PFC}$ = 100 kHz; δ = 30 %		2.45	2.7	2.95	mA
		IC in burst mode; no-load on pins FBDRIVER and PFCDRIVER; flyback switching; V_{FBCTRL} = 1.6 V; $V_{PFCSENSE}$ = 0 V		1.75	1.95	2.15	mA
		IC in burst mode; flyback not switching; V_{FBCTRL} = 0 V; $V_{PFCSENSE}$ = 0 V		1.24	1.35	1.46	mA
$I_{CC(prot)}$	protection supply current	time-out protection triggered; V_{HV} = 0 V		0.3	0.45	0.6	mA

All information provided in this document is subject to legal disclaimers.

© NXP Semiconductors N.V. 2015. All rights reserved.

Table 5. Characteristics *…continued*

T_{amb} = 25 °C; V_{CC} = 20 V; all voltages are measured with respect to ground (pin 2); currents are positive when flowing into the IC; unless otherwise specified.

Symbol	Parameter	Conditions		Min	Typ	Max	Unit
$I_{CC(pd)}$	power-down mode supply current	IC in power-down mode; V_{HV} = 0 V		0.3	0.45	0.6	mA
Input voltage sensing PFC (VINSENSE pin)							
$V_{stop(VINSENSE)}$	stop voltage on pin VINSENSE			0.86	0.89	0.92	V
$V_{start(VINSENSE)}$	start voltage on pin VINSENSE			1.12	1.16	1.20	V
V_{flr}	fast latch reset voltage	active after $V_{th(UVLO)}$ is detected		0.6	0.75	0.9	V
$V_{flr(hys)}$	hysteresis of fast latch reset voltage			60	110	160	mV
$I_{I(VINSENSE)}$	input current on pin VINSENSE	$V_{VINSENSE} > V_{stop(VINSENSE)}$ after $V_{start(VINSENSE)}$ is detected		5	20	50	nA
$V_{bst(dual)}$	dual boost voltage	high level		2.08	2.28	2.48	V
		low level		1.88	2.08	2.28	V
		switch-over region		120	200	280	mV
$V_{th(sel)clmp}$	clamp select threshold voltage	on pin VINSENSE		1.9	2	2.1	V
$V_{th(sel)clmp(hys)}$	clamp select threshold voltage hysteresis			60	100	140	mV
$V_{th(pd)}$	power-down threshold voltage			285	385	485	mV
$V_{th(pd)exit}$	exit power-down threshold voltage	V_{CC} = 0 V		335	460	585	mV
$V_{hys(pd)}$	power-down hysteresis voltage			45	75	105	mV
Loop compensation PFC (PFCCOMP pin)							
g_m	transconductance	$V_{VOSENSE}$ to $I_{O(PFCCOMP)}$		57	77	97	µA/V
$I_{O(PFCCOMP)}$	output current on pin PFCCOMP	$V_{VOSENSE}$ = 2 V; $V_{PFCCOMP}$ = 2.75 V		30	37	44	µA
		$V_{VOSENSE}$ = 3.3 V; $V_{PFCCOMP}$ = 2.75 V		−108	−88	−68	µA
$I_{en(PFCCOMP)}$	enable current on pin PFCCOMP			-	−55	-	µA
$V_{clamp(PFCCOMP)}$	clamp voltage on pin PFCCOMP	low-power mode; PFC off; lower clamp voltage.	[1]				
		VINSENSE ≥ $V_{th(sel)clmp}$ + $V_{th(sel)clmp(hys)}$ on pin VINSENSE; $V_{VOSENSE}$ = 2 V	[2]	3.2	3.32	3.44	V
		VINSENSE < $V_{th(sel)clmp}$ on pin VINSENSE; $V_{VOSENSE}$ = 2 V	[2]	1.8	1.92	2.04	V
		upper clamp voltage		3.6	3.75	3.9	V
		high-power mode; PFC on; uni-directional source clamp; $I_{PFCCOMP}$ = −30 µA; $V_{VOSENSE}$ = 2.5 V		1.9	2	2.1	V

All information provided in this document is subject to legal disclaimers.

© NXP Semiconductors N.V. 2015. All rights reserved.

Table 5. Characteristics *…continued*

T_{amb} = 25 °C; V_{CC} = 20 V; all voltages are measured with respect to ground (pin 2); currents are positive when flowing into the IC; unless otherwise specified.

Symbol	Parameter	Conditions		Min	Typ	Max	Unit
$V_{ton(PFCCOMP)zero}$	zero on-time voltage on pin PFCCOMP			3.4	3.5	3.6	V
Pulse-width modulator PFC							
$t_{on(PFC)}$	PFC on-time	$V_{VINSENSE}$ = 3.3 V; $V_{VOSENSE}$ = 2 V; $V_{PFCCOMP}$ = $V_{clamp(PFCCOMP)}$		1.8	2.8	3.8	µs
		$V_{VINSENSE}$ = 1 V; $V_{VOSENSE}$ = 2 V; $V_{PFCCOMP}$ = $V_{clamp(PFCCOMP)}$		17	27	37	µs
Output voltage sensing PFC (VOSENSE pin)							
$V_{th(start)VOSENSE}$	start threshold voltage on pin VOSENSE	open-loop		1.05	1.1	1.15	V
$V_{th(stop)VOSENSE}$	threshold stop voltage on pin VOSENSE			0.95	1	1.05	V
$V_{hys(VOSENSE)}$	hysteresis voltage on pin VOSENSE	$V_{th(start)VOSENSE} - V_{th(stop)VOSENSE}$		75	100	125	mV
$V_{reg(VOSENSE)}$	regulation voltage on pin VOSENSE	for $I_{O(PFCCOMP)}$ = 0 A		2.475	2.5	2.525	V
$V_{OVP(VOSENSE)}$		t_{on} = 0 µs		2.59	2.62	2.65	V
$I_{bst(dual)}$	dual boost current	$V_{VINSENSE}$ < $V_{bst(dual)}$ low-level or $V_{VOSENSE}$ < 2.1 V; V_{FBCTRL} = 5 V		–9.1	–8.1	–7.1	µA
		$V_{VINSENSE}$ = 4 V		–50	–25	–5	nA
Overcurrent protection PFC (PFCSENSE pin)							
$V_{sense(PFC)max}$	maximum PFC sense voltage	ΔV/Δt = 0 V/s		465	495	525	mV
$t_{d(PFCDRIVER)}$	delay time on pin PFCDRIVER	$V_{PFCSENSE}$ pulse-stepping 400 mV around $V_{sense(PFC)max}$		-	50	-	ns
$t_{leb(PFC)}$	PFC leading edge blanking time	$V_{PFCSENSE}$ = 0.75 V		230	290	350	ns
$I_{prot(PFCSENSE)}$	protection current on pin PFCSENSE			–50	-	–5	nA
Soft-start PFC (PFCSENSE pin)							
$I_{start(soft)PFC}$	PFC soft start current			–73	–60	–47	µA
$V_{start(soft)PFC}$	PFC soft start voltage	enabling voltage		0.45	0.5	0.55	V
$V_{stop(soft)PFC}$	PFC soft stop voltage	disabling voltage		0.4	0.45	0.5	V
Oscillator PFC							
$f_{sw(PFC)max}$	maximum PFC switching frequency			119	139	159	kHz
$t_{off(PFC)min}$	minimum PFC off-time	secondary stroke		1.25	1.55	1.85	µs
Valley switching PFC (PFCAUX pin)							
$(\Delta V/\Delta t)_{vrec(PFC)}$	PFC valley recognition voltage change with time			-	-	1.7	V/µs
$t_{to(vrec)PFC}$	PFC valley recognition time-out time			3	4.2	5.4	µs

All information provided in this document is subject to legal disclaimers.

© NXP Semiconductors N.V. 2015. All rights reserved.

Table 5. Characteristics *…continued*

T_{amb} = 25 °C; V_{CC} = 20 V; all voltages are measured with respect to ground (pin 2); currents are positive when flowing into the IC; unless otherwise specified.

Symbol	Parameter	Conditions		Min	Typ	Max	Unit
Demagnetization management PFC (PFCAUX pin)							
$V_{th(comp)PFCAUX}$	comparator threshold voltage on pin PFCAUX			−125	−90	−55	mV
$t_{to(demag)PFC}$	PFC demagnetization time-out time			39	48	57	µs
$I_{prot(PFCAUX)}$	protection current on pin PFCAUX	V_{PFCAUX} = 50 mV		−75	-	−5	nA
PFC off delay (PFCTIMER pin)							
$I_{source(PFCTIMER)}$	source current on pin PFCTIMER	$V_{PFCTIMER}$ = 2.5 V		−5.4	−4.7	−4	µA
$R_{sink(PFCTIMER)}$	sink resistance on pin PFCTIMER	$V_{PFCTIMER}$ = 2.5 V		4	5.5	7	kΩ
$V_{start(PFCTIMER)}$	start voltage on pin PFCTIMER			0.93	1.03	1.13	V
$V_{stop(PFCTIMER)}$	stop voltage on pin PFCTIMER			2.85	3	3.15	V
$V_{th(off)PFCTIMER}$	switch-off threshold voltage on pin PFCTIMER	PFC override voltage		4.2	4.4	4.6	V
Driver (PFCDRIVER pin)							
$I_{src(PFCDRIVER)}$	source current on pin PFCDRIVER	$V_{PFCDRIVER}$ = 2 V		-	−0.5	-	A
$I_{sink(PFCDRIVER)}$	sink current on pin PFCDRIVER	$V_{PFCDRIVER}$ = 2.5 V		-	0.7	-	A
$V_{O(PFCDRIVER)max}$	maximum output voltage on pin PFCDRIVER			10	11	12	V
OverVoltage Protection flyback (FBAUX pin)							
$I_{ovp(FBAUX)}$	overvoltage protection current on pin FBAUX			279	300	321	µA
Demagnetization management flyback (FBAUX pin)							
$V_{th(comp)FBAUX}$	comparator threshold voltage on pin FBAUX			60	90	120	mV
$I_{prot(FBAUX)}$	protection current on pin FBAUX	V_{FBAUX} = 50 mV		−65	-	−5	nA
$V_{clamp(FBAUX)}$	clamp voltage on pin FBAUX	I_{FBAUX} = −100 µA		−0.75	−0.7	−0.65	V
		I_{FBAUX} = 300 µA		0.87	0.92	0.97	V
$t_{sup(xfmr_ring)}$	transformer ringing suppression time			1.7	2.2	2.7	µs
Pulse width modulator flyback							
$t_{on(fb)max}$	maximum flyback on-time			32.5	38.5	44.5	µs

All information provided in this document is subject to legal disclaimers.

© NXP Semiconductors N.V. 2015. All rights reserved.

Table 5. Characteristics *…continued*

T_{amb} = 25 °C; V_{CC} = 20 V; all voltages are measured with respect to ground (pin 2); currents are positive when flowing into the IC; unless otherwise specified.

Symbol	Parameter	Conditions		Min	Typ	Max	Unit
Oscillator flyback							
$f_{sw(fb)max}$	maximum flyback switching frequency			110	130	150	kHz
$V_{start(red)f}$	frequency reduction start voltage	transfer from DCM/QR to FR mode		3.8	4	4.2	V
$f_{sw(fb)swon(PFC)}$	PFC switch-on flyback switching frequency			70	73	76	kHz
$f_{sw(fb)swoff(PFC)}$	PFC switch-off flyback switching frequency			50	53	56	kHz
$f_{sw(fb)burst(ent)}$	enter burst mode flyback switching frequency	enter burst mode		21	25	29	kHz
$f_{sw(fb)burst}$	burst mode flyback switching frequency	normal operation		31	36.5	42	kHz
$V_{en(PFC)FBCTRL}$	PFC enable voltage on pin FBCTRL	override voltage		3.4	3.75	4.1	V
Peak current control flyback (FBCTRL pin)							
V_{FBCTRL}	voltage on pin FBCTRL	for maximum flyback peak current		4.6	4.9	5.2	V
$V_{to(FBCTRL)}$	time-out voltage on pin FBCTRL	enable voltage		5.3	5.5	5.7	V
		trip voltage		7.3	7.75	8.2	V
$V_{th(burst)off}$	off-state burst mode threshold voltage	on pin FBCTRL		0.62	0.77	0.92	V
$V_{th(burst)on}$	on-state burst mode threshold voltage	on pin FBCTRL		2.2	2.4	2.6	V
$V_{th(burst)exit}$	exit burst mode threshold voltage	on pin FBCTRL		2.6	2.8	3	V
$V_{burst(exit-on)}$	burst mode voltage difference between exit and on-state	pin FBCTRL = $V_{th(burst)exit} - V_{th(burst)on}$		325	390	455	mV
$V_{burst(on-off)}$	burst mode voltage difference between on-state and off-state	pin FBCTRL = $V_{th(burst)on} - V_{th(burst)off}$		1.5	1.63	1.76	V
$R_{int(FBCTRL)}$	internal resistance on pin FBCTRL			9.8	13.2	16.5	kΩ
$I_{O(FBCTRL)}$	output current on pin FBCTRL	V_{FBCTRL} = 0 V		–0.75	–0.6	–0.45	mA
		V_{FBCTRL} = 4.5 V		–0.3	–0.24	–0.18	mA
$I_{to(FBCTRL)}$	time-out current on pin FBCTRL	V_{FBCTRL} = 6 V		–35	–29	–23	µA

All information provided in this document is subject to legal disclaimers.

© NXP Semiconductors N.V. 2015. All rights reserved.

Table 5. Characteristics *…continued*

T_{amb} = 25 °C; V_{CC} = 20 V; all voltages are measured with respect to ground (pin 2); currents are positive when flowing into the IC; unless otherwise specified.

Symbol	Parameter	Conditions		Min	Typ	Max	Unit
Valley switching flyback (HV pin)							
$(\Delta V/\Delta t)_{vrec(fb)}$	flyback valley recognition voltage change with time		[3]	−75	-	+75	V/µs
$t_{d(vrec-swon)}$	valley recognition to switch-on delay time		[3]	-	75	-	ns
Soft-start flyback (FBSENSE pin)							
$I_{start(soft)fb}$	flyback soft start current			−75	−60	−45	µA
$V_{start(soft)fb}$	flyback soft start voltage	enable voltage		0.5	0.55	0.6	V
OverCurrent protection flyback (FBSENSE pin)							
$V_{sense(fb)max}$	maximum flyback sense voltage	$\Delta V/\Delta t$ = 0 V/s		525	545	565	mV
$V_{sense(fb)min}$	minimum flyback sense voltage	$\Delta V/\Delta t$ = 0 V/s		221	232	243	mV
$t_{d(FBDRIVER)}$	delay time on pin FBDRIVER	$V_{FBSENSE}$ pulse-stepping 400 mV around $V_{sense(fb)max}$		-	80	-	ns
$t_{on(fb)min}$	minimum flyback on-time	V_{FBCRTL} = 3 V; $V_{FBSENSE}$ = 0.75 V		280	340	400	ns
$I_{adj(FBSENSE)}$	adjust current on pin FBSENSE			−2.29	−2.1	−1.91	µA
OverPower Protection flyback (FBSENSE pin)							
$V_{sense(fb)max}$	maximum flyback sense voltage	$\Delta V/\Delta t$ = 0 V/s					
		I_{FBAUX} = 80 µA		525	545	565	mV
		I_{FBAUX} = 120 µA		495	540	565	mV
		I_{FBAUX} = 240 µA		400	445	490	mV
		I_{FBAUX} = 360 µA		345	400	455	mV
Driver (FBDRIVER pin)							
$I_{src(FBDRIVER)}$	source current on pin FBDRIVER	$V_{FBDRIVER}$ = 2 V		-	−0.5	-	A
$I_{sink(FBDRIVER)}$	sink current on pin FBDRIVER	$V_{FBDRIVER}$ = 2.5 V		-	0.7	-	A
$V_{O(FBDRIVER)(max)}$	maximum output voltage on pin FBDRIVER			10	11	12	V
LATCH input (LATCH pin)							
$V_{prot(LATCH)}$	protection voltage on pin LATCH			469	494	519	mV
$I_{O(LATCH)}$	output current on pin LATCH	$V_{prot(LATCH)} < V_{LATCH} < V_{oc(LATCH)}$		−32.5	−30.5	−28.5	µA
$V_{en(LATCH)}$	enable voltage on pin LATCH	at start-up		552	582	612	mV

All information provided in this document is subject to legal disclaimers.

© NXP Semiconductors N.V. 2015. All rights reserved.

Table 5. Characteristics *…continued*

T_{amb} = 25 °C; V_{CC} = 20 V; all voltages are measured with respect to ground (pin 2); currents are positive when flowing into the IC; unless otherwise specified.

Symbol	Parameter	Conditions		Min	Typ	Max	Unit
$V_{hys(LATCH)}$	hysteresis voltage on pin LATCH	$V_{en(LATCH)} - V_{prot(LATCH)}$		68	88	108	mV
$V_{oc(LATCH)}$	open-circuit voltage on pin LATCH			-	1.75	-	V
Temperature protection							
$T_{pl(IC)}$	IC protection level temperature			135	145	155	°C
$T_{pl(IC)hys}$	hysteresis of IC protection level temperature		[3]	-	10	-	°C

[1] A typical application with a compensation network on the PFCCOMP pin, such as the example in Figure 3.

[2] The clamp voltage on the PFCCOMP pin is dependent on the VINSENSE voltage. When the $V_{VINSENSE}$ rises above $V_{th(sel)clmp} + V_{th(sel)clmp(hys)}$, the high clamp level is active. When the voltage on the VINSENSE pin drops below the $V_{th(sel)clmp}$ level again, the low clamp level is active.

[3] Guaranteed by design.

All information provided in this document is subject to legal disclaimers.

© NXP Semiconductors N.V. 2015. All rights reserved.

11. Application information

A power supply with the TEA1755T consists of a PFC circuit and a flyback converter (see Figure 18).

Capacitor C_{VCC} buffers the IC supply voltage. The IC supply voltage is powered using the high voltage rectified mains during start-up and the auxiliary winding of the flyback converter during operation. Sense resistors R_{SENSE1} and R_{SENSE2} convert the current through the MOSFETs S1 and S2 into a voltage on the PFCSENSE and FBSENSE pins. The R_{SENSE1} and R_{SENSE2} values define the maximum primary peak current in MOSFETs S1 and S2.

In the example, the LATCH pin is connected to a Negative Temperature Coefficient (NTC) resistor. The protection is activated when the resistance drops below a value as calculated in Equation 8:

$$\frac{V_{prot(LATCH)}}{I_{O(LATCH)}} = 16.2\ k\Omega \quad (8)$$

A capacitor $C_{TIMEOUT}$ is connected to the FBCTRL pin. R_{LOOP} ensures that the time-out capacitor does not interfere with the normal regulation loop.

R_{S1} and R_{S2} are added to prevent the soft-start capacitors from being charged during normal operation due to negative voltage spikes across the sense resistors.

Resistor R_{AUX1} is added to protect the IC from damage during lightning events.

R_{S3} and R_{COMP} are added to compensate for input voltage variations. The (stray) capacitance on the drain of MOSFET S2 affects the frequency reduction slope and therefore, the PFC switch-on and switch-off levels. Choosing the proper values for R_{S3} and R_{COMP} results in an input voltage independent PFC switch-on and switch-off power level.

R_{DRV1} and R_{DRV2} prevent the output drivers from being damaged due to, for example, power MOSFET avalanche.

In the application, the HV pin of the IC can either be connected to the center tap of the flyback transformer or to the drain of MOSFET S2

Refer to application note *AN11142* for more detailed information.

All information provided in this document is subject to legal disclaimers.

© NXP Semiconductors N.V. 2015. All rights reserved.

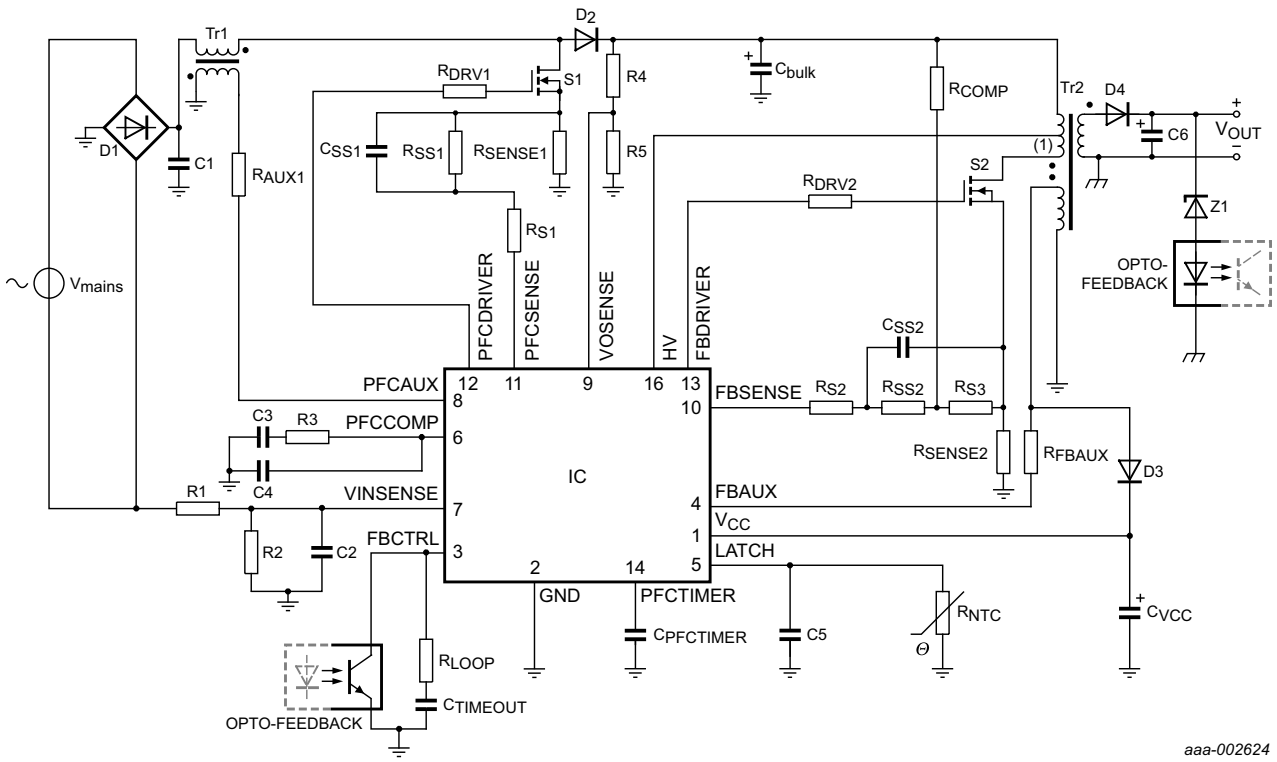

(1) In the application, the HV pin of the IC can either be connected to the center tap of the flyback transformer or to the drain of MOSFET S2.

Fig 18. TEA1755T typical application diagram

All information provided in this document is subject to legal disclaimers.

© NXP Semiconductors N.V. 2015. All rights reserved.

12. Package outline

SO16: plastic small outline package; 16 leads; body width 3.9 mm **SOT109-1**

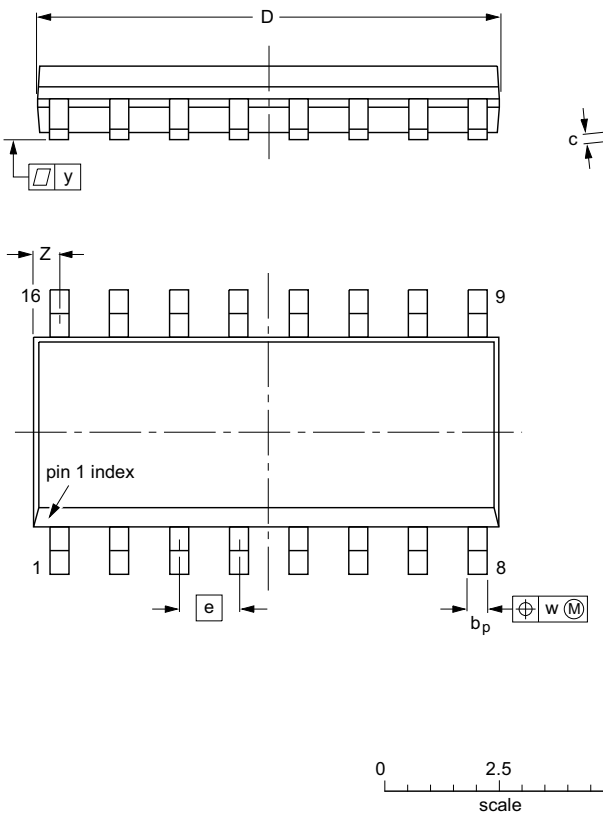

DIMENSIONS (inch dimensions are derived from the original mm dimensions)

UNIT	A max.	A_1	A_2	A_3	b_p	c	$D^{(1)}$	$E^{(1)}$	e	H_E	L	L_p	Q	v	w	y	$Z^{(1)}$	θ
mm	1.75	0.25 0.10	1.45 1.25	0.25	0.49 0.36	0.25 0.19	10.0 9.8	4.0 3.8	1.27	6.2 5.8	1.05	1.0 0.4	0.7 0.6	0.25	0.25	0.1	0.7 0.3	8° 0°
inches	0.069	0.010 0.004	0.057 0.049	0.01	0.019 0.014	0.0100 0.0075	0.39 0.38	0.16 0.15	0.05	0.244 0.228	0.041	0.039 0.016	0.028 0.020	0.01	0.01	0.004	0.028 0.012	

Note

1. Plastic or metal protrusions of 0.15 mm (0.006 inch) maximum per side are not included.

OUTLINE VERSION	REFERENCES				EUROPEAN PROJECTION	ISSUE DATE
	IEC	JEDEC	JEITA			
SOT109-1	076E07	MS-012				~~99-12-27~~ 03-02-19

Fig 19. Package outline SOT109-1 (SO16)

All information provided in this document is subject to legal disclaimers.

© NXP Semiconductors N.V. 2015. All rights reserved.

13. Revision history

Table 6. Revision history

Document ID	Release date	Data sheet status	Change notice	Supersedes
TEA1755T v.1.1	20150313	Product data sheet	-	TEA1755T v.1
Modifications:	• Table 3 “Limiting values” has been updated.			
TEA1755T v.1	20121025	Product data sheet	-	-

All information provided in this document is subject to legal disclaimers.

© NXP Semiconductors N.V. 2015. All rights reserved.

14. Legal information

14.1 Data sheet status

Document status[1][2]	Product status[3]	Definition
Objective [short] data sheet	Development	This document contains data from the objective specification for product development.
Preliminary [short] data sheet	Qualification	This document contains data from the preliminary specification.
Product [short] data sheet	Production	This document contains the product specification.

[1] Please consult the most recently issued document before initiating or completing a design.

[2] The term 'short data sheet' is explained in section "Definitions".

[3] The product status of device(s) described in this document may have changed since this document was published and may differ in case of multiple devices. The latest product status information is available on the Internet at URL http://www.nxp.com.

14.2 Definitions

Draft — The document is a draft version only. The content is still under internal review and subject to formal approval, which may result in modifications or additions. NXP Semiconductors does not give any representations or warranties as to the accuracy or completeness of information included herein and shall have no liability for the consequences of use of such information.

Short data sheet — A short data sheet is an extract from a full data sheet with the same product type number(s) and title. A short data sheet is intended for quick reference only and should not be relied upon to contain detailed and full information. For detailed and full information see the relevant full data sheet, which is available on request via the local NXP Semiconductors sales office. In case of any inconsistency or conflict with the short data sheet, the full data sheet shall prevail.

Product specification — The information and data provided in a Product data sheet shall define the specification of the product as agreed between NXP Semiconductors and its customer, unless NXP Semiconductors and customer have explicitly agreed otherwise in writing. In no event however, shall an agreement be valid in which the NXP Semiconductors product is deemed to offer functions and qualities beyond those described in the Product data sheet.

14.3 Disclaimers

Limited warranty and liability — Information in this document is believed to be accurate and reliable. However, NXP Semiconductors does not give any representations or warranties, expressed or implied, as to the accuracy or completeness of such information and shall have no liability for the consequences of use of such information. NXP Semiconductors takes no responsibility for the content in this document if provided by an information source outside of NXP Semiconductors.

In no event shall NXP Semiconductors be liable for any indirect, incidental, punitive, special or consequential damages (including - without limitation - lost profits, lost savings, business interruption, costs related to the removal or replacement of any products or rework charges) whether or not such damages are based on tort (including negligence), warranty, breach of contract or any other legal theory.

Notwithstanding any damages that customer might incur for any reason whatsoever, NXP Semiconductors' aggregate and cumulative liability towards customer for the products described herein shall be limited in accordance with the *Terms and conditions of commercial sale* of NXP Semiconductors.

Right to make changes — NXP Semiconductors reserves the right to make changes to information published in this document, including without limitation specifications and product descriptions, at any time and without notice. This document supersedes and replaces all information supplied prior to the publication hereof.

Suitability for use — NXP Semiconductors products are not designed, authorized or warranted to be suitable for use in life support, life-critical or safety-critical systems or equipment, nor in applications where failure or malfunction of an NXP Semiconductors product can reasonably be expected to result in personal injury, death or severe property or environmental damage. NXP Semiconductors and its suppliers accept no liability for inclusion and/or use of NXP Semiconductors products in such equipment or applications and therefore such inclusion and/or use is at the customer's own risk.

Applications — Applications that are described herein for any of these products are for illustrative purposes only. NXP Semiconductors makes no representation or warranty that such applications will be suitable for the specified use without further testing or modification.

Customers are responsible for the design and operation of their applications and products using NXP Semiconductors products, and NXP Semiconductors accepts no liability for any assistance with applications or customer product design. It is customer's sole responsibility to determine whether the NXP Semiconductors product is suitable and fit for the customer's applications and products planned, as well as for the planned application and use of customer's third party customer(s). Customers should provide appropriate design and operating safeguards to minimize the risks associated with their applications and products.

NXP Semiconductors does not accept any liability related to any default, damage, costs or problem which is based on any weakness or default in the customer's applications or products, or the application or use by customer's third party customer(s). Customer is responsible for doing all necessary testing for the customer's applications and products using NXP Semiconductors products in order to avoid a default of the applications and the products or of the application or use by customer's third party customer(s). NXP does not accept any liability in this respect.

Limiting values — Stress above one or more limiting values (as defined in the Absolute Maximum Ratings System of IEC 60134) will cause permanent damage to the device. Limiting values are stress ratings only and (proper) operation of the device at these or any other conditions above those given in the Recommended operating conditions section (if present) or the Characteristics sections of this document is not warranted. Constant or repeated exposure to limiting values will permanently and irreversibly affect the quality and reliability of the device.

Terms and conditions of commercial sale — NXP Semiconductors products are sold subject to the general terms and conditions of commercial sale, as published at http://www.nxp.com/profile/terms, unless otherwise agreed in a valid written individual agreement. In case an individual agreement is concluded only the terms and conditions of the respective agreement shall apply. NXP Semiconductors hereby expressly objects to applying the customer's general terms and conditions with regard to the purchase of NXP Semiconductors products by customer.

No offer to sell or license — Nothing in this document may be interpreted or construed as an offer to sell products that is open for acceptance or the grant, conveyance or implication of any license under any copyrights, patents or other industrial or intellectual property rights.

All information provided in this document is subject to legal disclaimers.

© NXP Semiconductors N.V. 2015. All rights reserved.

Export control — This document as well as the item(s) described herein may be subject to export control regulations. Export might require a prior authorization from competent authorities.

Non-automotive qualified products — Unless this data sheet expressly states that this specific NXP Semiconductors product is automotive qualified, the product is not suitable for automotive use. It is neither qualified nor tested in accordance with automotive testing or application requirements. NXP Semiconductors accepts no liability for inclusion and/or use of non-automotive qualified products in automotive equipment or applications.

In the event that customer uses the product for design-in and use in automotive applications to automotive specifications and standards, customer (a) shall use the product without NXP Semiconductors' warranty of the product for such automotive applications, use and specifications, and (b) whenever customer uses the product for automotive applications beyond NXP Semiconductors' specifications such use shall be solely at customer's own risk, and (c) customer fully indemnifies NXP Semiconductors for any liability, damages or failed product claims resulting from customer design and use of the product for automotive applications beyond NXP Semiconductors' standard warranty and NXP Semiconductors' product specifications.

Translations — A non-English (translated) version of a document is for reference only. The English version shall prevail in case of any discrepancy between the translated and English versions.

14.4 Trademarks

Notice: All referenced brands, product names, service names and trademarks are the property of their respective owners.

GreenChip — is a trademark of NXP Semiconductors N.V.

15. Contact information

For more information, please visit: **http://www.nxp.com**

For sales office addresses, please send an email to: **salesaddresses@nxp.com**

All information provided in this document is subject to legal disclaimers.

© NXP Semiconductors N.V. 2015. All rights reserved.

16. Contents

1 General description 1
2 Features and benefits 2
2.1 Distinctive features 2
2.2 Green features 2
2.3 PFC green features 2
2.4 Flyback green features 2
2.5 Protection features 2
3 Applications 3
4 Ordering information 3
5 Block diagram 3
6 Pinning information 4
6.1 Pinning 4
6.2 Pin description 4
7 Functional description 5
7.1 General control 5
7.1.1 Start-up and UnderVoltage LockOut (UVLO) . . 5
7.1.2 Power-down mode 7
7.1.3 Supply management 8
7.1.4 Latch input 8
7.1.5 Fast latch reset 8
7.1.6 Overtemperature protection 8
7.2 Power factor correction circuit 8
7.2.1 t_{on} control (PFCCOMP pin) 8
7.2.2 Valley switching and demagnetization (PFCAUX pin) 9
7.2.3 Frequency limitation 9
7.2.4 Mains voltage compensation (VINSENSE pin) . 9
7.2.5 Soft-start (PFCSENSE pin) 9
7.2.6 PFC switch on/switch off control 10
7.2.7 PFC switch off delay (PFCTIMER pin) 10
7.2.8 Dual-boost PFC 11
7.2.9 Overcurrent protection (PFCSENSE pin) 12
7.2.10 Mains undervoltage lockout/brownout protection (VINSENSE pin) 12
7.2.11 Overvoltage protection (VOSENSE pin) 12
7.2.12 PFC open-loop protection (VOSENSE pin) . . 12
7.2.13 Driver (PFCDRIVER pin) 12
7.3 Flyback controller 12
7.3.1 Multimode operation 13
7.3.2 Valley switching (HV pin) 14
7.3.3 Current mode control (FBSENSE pin) 15
7.3.4 Demagnetization (FBAUX pin) 16
7.3.5 Flyback control/time-out (FBCTRL pin) 16
7.3.6 Burst mode operation (FBCTRL pin) 17
7.3.7 Soft-start (FBSENSE pin) 18
7.3.8 Maximum on-time 19
7.3.9 Overvoltage protection (FBAUX pin) 19
7.3.10 Overcurrent protection (FBSENSE pin) 20
7.3.11 Overpower protection 20
7.3.12 Driver (FBDRIVER pin) 20
8 Limiting values 21
9 Thermal characteristics 22
10 Characteristics 22
11 Application information 29
12 Package outline 31
13 Revision history 32
14 Legal information 33
14.1 Data sheet status 33
14.2 Definitions 33
14.3 Disclaimers 33
14.4 Trademarks 34
15 Contact information 34
16 Contents 35

Please be aware that important notices concerning this document and the product(s) described herein, have been included in section 'Legal information'.

© NXP Semiconductors N.V. 2015. All rights reserved.

For more information, please visit: http://www.nxp.com
For sales office addresses, please send an email to: salesaddresses@nxp.com

Date of release: 13 March 2015
Document identifier: TEA1755T

ENTEGRECİ

Bu belge www.entegreci.com üzerinden sunulmaktadır.

Elektronik komponent tedarikinde Entegreci

Entegreci, Eskişehir merkezli, Türkiye geneline satış yapan bir elektronik komponent mağazasıdır. Entegreler (IC), mikrodenetleyiciler, transistörler, diyotlar, pasif elemanlar, konnektörler, modüller ve geliştirme kartları tek adetten seri üretim adetlerine kadar satılır. Ürün sayfalarında güncel stok durumunu, fiyatı ve datasheet bağlantısını bulabilirsiniz.

Parça koduyla arama

Üretici parça numarasını yazın; stok ve fiyatı hemen görün.

www.entegreci.com

Ürün kategorileri

Entegreden kapasitöre tüm elektronik komponent kategorileri.

Kategorilere göz atın

Üreticiler

Aradığınız üreticinin ürünlerini tek sayfada inceleyin.

Üreticileri görün

Toplu alım ve teklif

Listede olmayan ya da yüksek adetli parçalar için teklif isteyin.

Teklif isteyin

www.entegreci.com | **destek@entegreci.com** | **0850 305 90 34**

Entegreci is an online electronic components store based in Türkiye. Search by manufacturer part number to see stock, prices and datasheets for integrated circuits, microcontrollers, transistors, passive components and connectors, or request a quote for parts that are not listed.

Bu sayfa Entegreci tarafından eklenmiştir. Belgenin önceki sayfaları asıl yayıncısına aittir ve içeriği değiştirilmemiştir; en güncel sürüm için belgenin yayıncısına başvurun.