TEA1751LT

HV start-up DCM/QR flyback controller with integrated DCM/QR PFC controller

Rev. 3 — 9 January 2013 Product data sheet

1. General description

The TEA1751LT is the third generation of green Switched Mode Power Supply (SMPS) controller ICs. The TEA1751LT combines a controller for Power Factor Correction (PFC) and a flyback controller. Its high level of integration allows the design of a cost-effective power supply with a very low number of external components.

The special built-in green functions provide high efficiency at all power levels. This efficiency applies to quasi-resonant operation at high-power levels, quasi-resonant operation with valley skipping, as well as reduced frequency operation at lower power levels. At low-power levels, the PFC switches off to maintain high efficiency.

During low-power conditions, the flyback controller switches to frequency reduction mode and limits the peak current to 25 % of its maximum value. This mode ensures high efficiency at low-power and good standby power performance while minimizing audible noise from the transformer.

The TEA1751LT is a Multi-Chip Module, (MCM), containing two chips. The proprietary high-voltage BCD800 process which makes direct start-up possible from the rectified universal mains voltage in an effective and green way. The second low voltage Silicon On Insulator (SOI) is used for accurate, high speed protection functions and control.

The TEA1751LT enables the design of highly efficient and reliable supplies with power requirements of up to 250 W using the minimum number of external components.

Remark: All values provided throughout this data sheet are typical values unless otherwise stated.

2. Features and benefits

2.1 Distinctive features

- Integrated PFC and flyback controller
- Universal mains supply operation (70 V (AC) to 276 V (AC))
- Dual-boost PFC with accurate maximum output voltage (NXP patented)
- High level of integration, resulting in a very low external component count and a cost-effective design

2.2 Green features

- On-chip start-up current source

2.3 PFC green features

- Valley/Zero Voltage Switching (ZVS) for minimum switching losses (NXP patented)
- Frequency limitation to reduce switching losses
- PFC is switched off when a low load is detected at the flyback output

2.4 Flyback green features

- Valley switching for minimum switching losses (NXP patented)
- Frequency reduction with fixed minimum peak current at low-power operation to maintain high efficiency at low output power levels

2.5 Protection features

- Safe restart mode for system fault conditions
- Continuous mode protection with demagnetization detection for both converters (NXP patented)
- UnderVoltage Protection (UVP) (foldback during overload)
- Accurate OverVoltage Protection (OVP) for both converters (adjustable for flyback converter)
- Mains voltage independent OverPower Protection (OPP)
- Open control loop protection for both converters. The open-loop protection on the flyback converter is latched
- OverTemperature Protection (OTP)
- Low and adjustable OverCurrent Protection (OCP) trip level for both converters
- General-purpose input for latched protection to provide system OverTemperature Protection (OTP) for example

3. Applications

- The device is used in all applications requiring an efficient and cost-effective power supply solutions up to 250 W. Notebook adapters in particular can benefit from the high level of integration

All information provided in this document is subject to legal disclaimers.

© NXP B.V. 2013. All rights reserved.

4. Ordering information

Table 1. Ordering information

Type number	Package		
	Name	Description	Version
TEA1751LT	SO16	plastic small outline package; 16 leads; body width 3.9 mm	SOT109-1

All information provided in this document is subject to legal disclaimers.

© NXP B.V. 2013. All rights reserved.

5. Block diagram

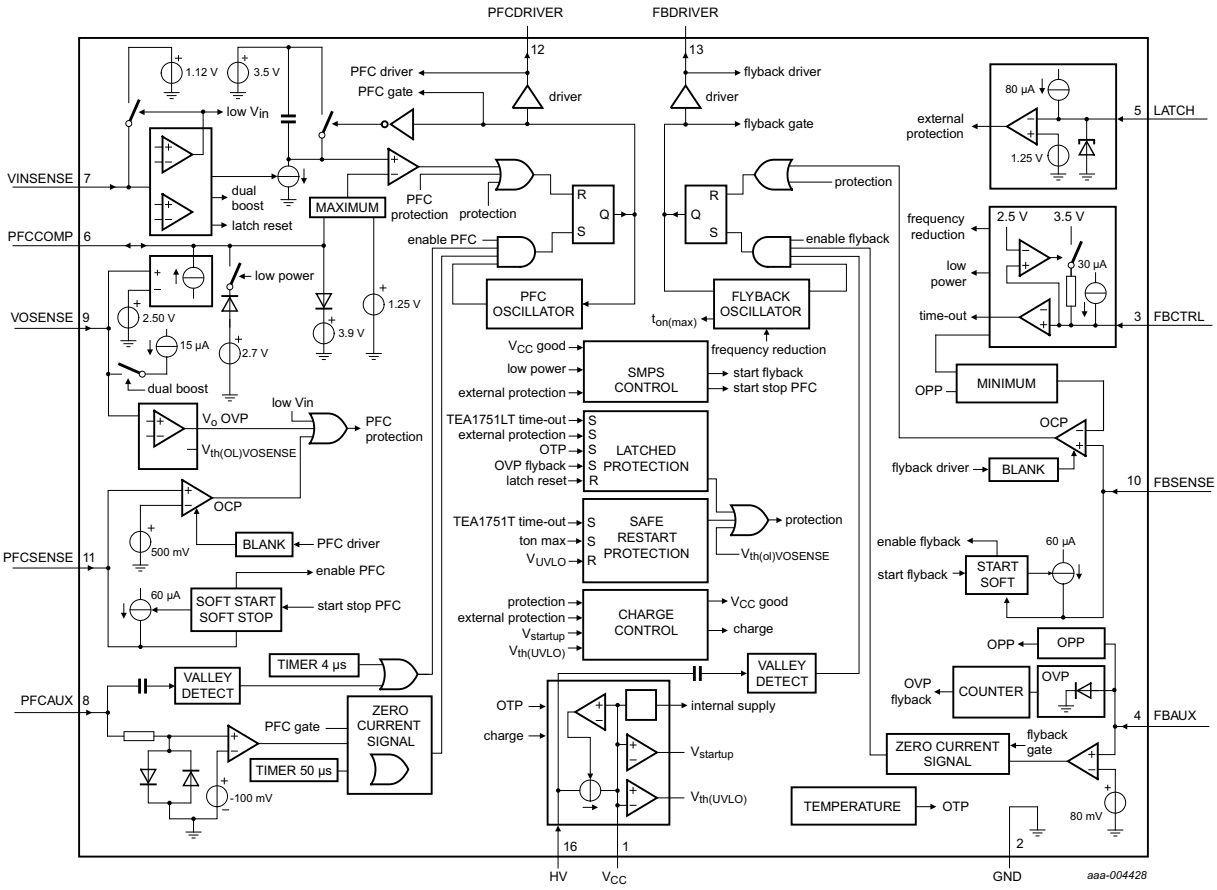

Fig 1. Block diagram

All information provided in this document is subject to legal disclaimers.

© NXP B.V. 2013. All rights reserved.

6. Pinning information

6.1 Pinning

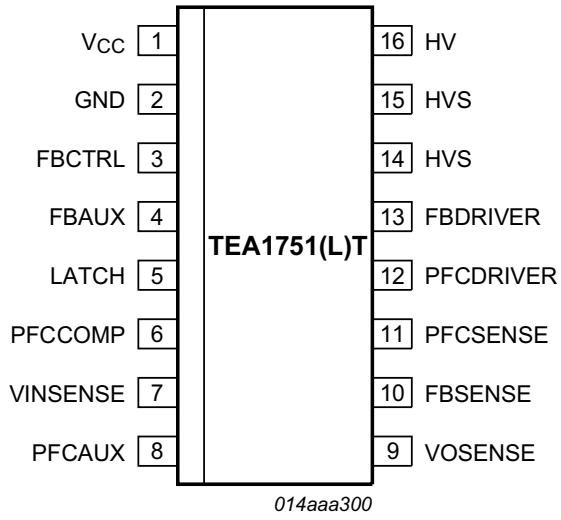

Fig 2. Pin configuration: TEA1751LT (SOT109-1)

6.2 Pin description

Table 2. Pin description

Symbol	Pin	Description
V_{CC}	1	supply voltage
GND	2	ground
FBCTRL	3	flyback control input
FBAUX	4	auxiliary winding input for demagnetization timing and flyback OVP
LATCH	5	general-purpose protection input
PFCCOMP	6	frequency compensation pin for PFC
VINSENSE	7	mains voltage sense input
PFCAUX	8	auxiliary winding input for demagnetization timing for PFC
VOSENSE	9	sense input for PFC output voltage
FBSENSE	10	flyback current sense input
PFCSENSE	11	PFC current sense input
PFCDRIVER	12	PFC gate-driver output
FBDRIVER	13	flyback gate-driver output
HVS	14 and15	high-voltage safety spacer, not connected
HV	16	high-voltage start-up / flyback valley sensing

All information provided in this document is subject to legal disclaimers.

© NXP B.V. 2013. All rights reserved.

7. Functional description

7.1 General control

The TEA1751LT contains a controller for a power factor correction circuit as well as a controller for a flyback circuit. The typical configuration is shown in Figure 3.

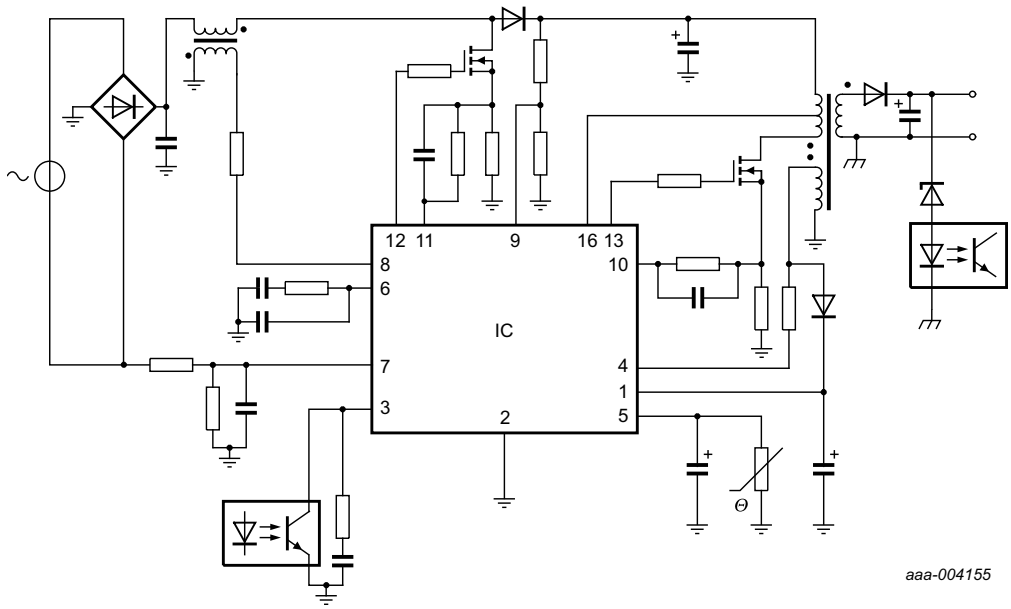

Fig 3. TEA1751LT typical configuration

7.1.1 Start-up and UnderVoltage LockOut (UVLO)

Initially, the capacitor on the V_{CC} pin is charged from the high-voltage mains using the HV pin.

When V_{CC} is less than V_{trip}, the charge current is low. This low current protects the IC if the V_{CC} pin is shorted to ground. To ensure a short start-up time, the charge current above V_{trip} is increased until V_{CC} reaches $V_{th(UVLO)}$. When V_{CC} is between $V_{th(UVLO)}$ and $V_{startup}$, the charge current goes low again to ensure a low, safe restart duty cycle during fault conditions.

The control logic activates the internal circuitry and switches off the HV charge current when the voltage on pin V_{CC} passes the $V_{startup}$ level. First, the LATCH pin current source is activated and the soft-start capacitors on the PFCSENSE and FBSENSE pins are charged.

When the LATCH pin voltage exceeds the $V_{en(LATCH)}$ voltage, and the soft start capacitor on the PFCSENSE pin is charged, the PFC circuit is activated.

If the soft-start capacitor on the FBSENSE pin is charged, the flyback converter is also activated. The flyback converter output voltage is then regulated to its nominal output voltage. The auxiliary winding of the flyback converter takes over the IC supply. See Figure 4.

All information provided in this document is subject to legal disclaimers.

© NXP B.V. 2013. All rights reserved.

If during start-up the LATCH pin does not reach the $V_{en(LATCH)}$ level before V_{CC} reaches $V_{th(UVLO)}$, it is deactivated. The charge current is then switched on again.

When the flyback converter starts, V_{FBCTRL} is monitored. If this output voltage does not reach its intended regulation level within a specified time, the voltage on the FBCTRL pin reaches the $V_{to(FBCTRL)}$ level. An error is then assumed and a latched reset is initiated.

When one of the protection functions is activated, both converters stop switching and the V_{CC} voltage drops to $V_{th(UVLO)}$. A latched protection recharges capacitor C_{VCC} using the HV pin, but does not restart the converters. To provide safe restart protection, the capacitor is recharged using the HV pin and the device restarts (see block diagram, Figure 1).

If OVP of the PFC circuit ($V_{VOSENSE} > V_{OVP(VOSENSE))}$ occurs, the PFC controller stops switching until the VOSENSE pin voltage drops to less than $V_{OVP(VOSENSE)}$. If a mains undervoltage is detected, $V_{VINSENSE} < V_{stop(VINSENSE)}$, the PFC controller stops switching until $V_{VINSENSE} > V_{start(VINSENSE)}$ again.

When the voltage on pin V_{CC} drops below the undervoltage lockout level, both controllers stop switching and re-enter the safe restart mode. In the safe restart mode, the driver outputs are disabled and the V_{CC} pin voltage is recharged using the HV pin.

All information provided in this document is subject to legal disclaimers.

© NXP B.V. 2013. All rights reserved.

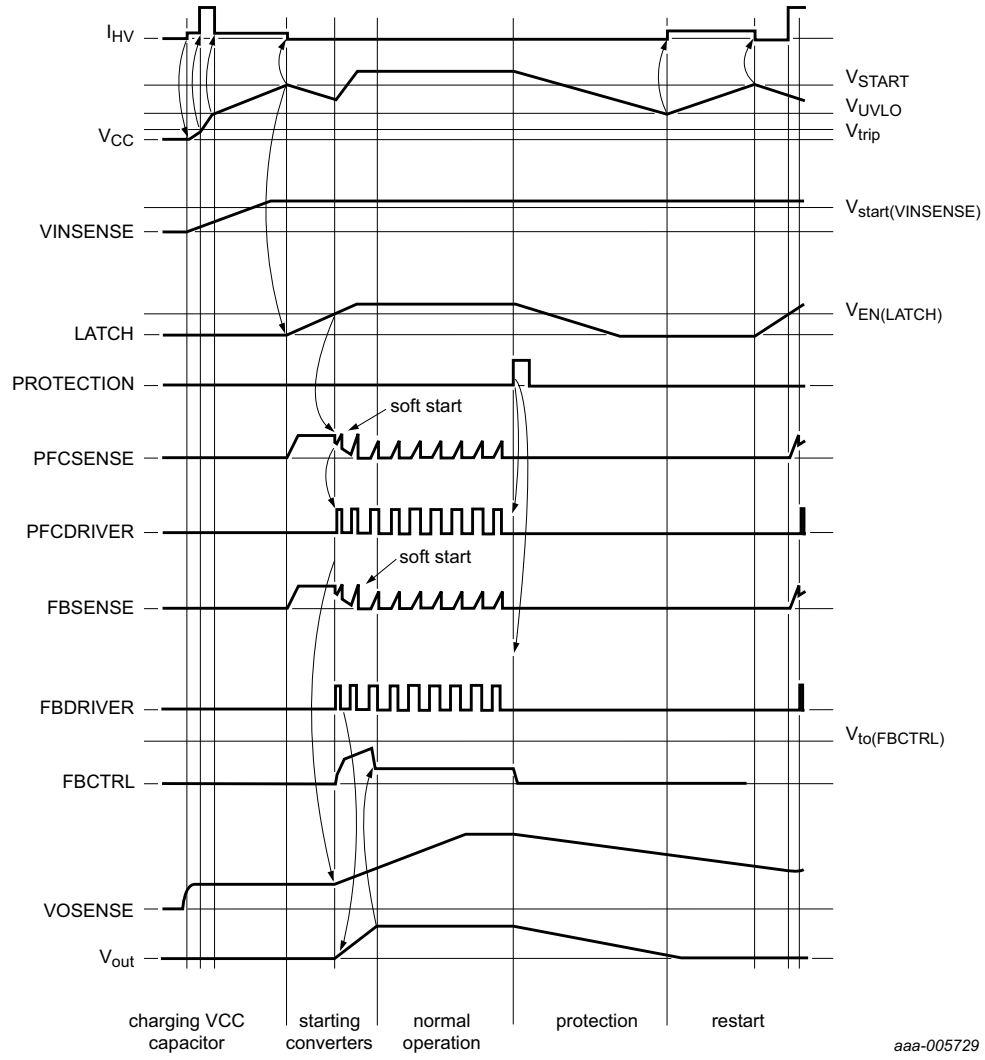

Fig 4. Start-up sequence, normal operation and restart sequence

7.1.2 Supply management

All internal reference voltages are derived from a temperature compensated and trimmed on-chip band gap circuit. Internal reference currents are derived from a temperature compensated and trimmed on-chip current reference circuit.

7.1.3 Latch input

The LATCH pin is a general-purpose input pin, which is used to switch off both converters. The pin sources a current $I_{O(LATCH)}$ of 80 μA. Switching off is stopped as soon as the voltage on the latch drops below 1.25 V.

At initial start-up, switching is inhibited until the capacitor on the LATCH pin is charged above 1.35 V. No internal filtering is done on this pin. An internal Zener clamp of 2.9 V protects this pin from excessive voltages.

All information provided in this document is subject to legal disclaimers.

© NXP B.V. 2013. All rights reserved.

7.1.4 Fast latch reset

In a typical application, the mains can be interrupted briefly to reset the latched protection. The PFC bus capacitor, C_{bus}, does not have to discharge for this latched protection to reset.

When the VINSENSE voltage drops below 750 mV and is then raised to 870 mV, the latched protection is reset.

The latched protection is also reset by removing the voltage from the V_{CC} and HV pins.

7.1.5 Overtemperature protection

An accurate internal temperature protection is provided in the circuit. When the junction temperature exceeds the thermal shut-down temperature, the IC stops switching. As long as OTP is active, the capacitor C_{VCC} is not recharged from the HV mains. If the V_{CC} supply voltage is not sufficient, the OTP circuit is supplied from the HV pin.

OTP is a latched protection. It is reset by removing the voltage from the V_{CC} and HV pins or by the fast latch reset function (see Section 7.1.4).

7.2 Power factor correction circuit

The power factor correction circuit operates in quasi-resonant or Discontinuous Conduction Mode (DCM) with valley switching. The next primary stroke is only started when the previous secondary stroke has ended and the voltage across the PFC MOSFET has reached a minimum value. V_{PFCAUX} is used to detect transformer demagnetization and the minimum voltage across the external PFC MOSFET switch.

7.2.1 t_{on} control

The power factor correction circuit is operated in t_{on} control. The resulting mains harmonic reduction is well within the class-D requirements.

7.2.2 Valley switching and demagnetization (PFCAUX pin)

The PFC MOSFET is switched on after the transformer is demagnetized. Internal circuitry connected to the PFCAUX pin detects the end of the secondary stroke. It also detects the voltage across the PFC MOSFET. To reduce switching losses and electromagnetic Interference (EMI) (valley switching), the next stroke is started if the voltage across the PFC MOSFET is at its minimum.

If a demagnetization signal is not detected on the PFCAUX pin, the controller generates a Zero-current Signal (ZCS), 50 μs after the last PFCGATE signal.

If a valley signal is not detected on the PFCAUX pin, the controller generates a valley signal 4 μs after demagnetization is detected.

To protect the internal circuitry during lightning events, for example, add a 5 kΩ series resistor to PFCAUX. To prevent incorrect switching due to external disturbance, place the resistor close to the IC on the printed-circuit board.

All information provided in this document is subject to legal disclaimers.

© NXP B.V. 2013. All rights reserved.

7.2.3 Frequency limitation

To optimize the transformer and minimize switching losses, the switching frequency is limited to $f_{sw(PFC)max}$. If the frequency for quasi-resonant operation is above the $f_{sw(PFC)max}$ limit, the system switches over to DCM. The PFC MOSFET is only switched on at a minimum voltage across the switch (valley switching).

7.2.4 Mains voltage compensation (VINSENSE pin)

The equation for the transfer function of a power factor corrector contains the square of the mains input voltage. In a typical application, this results in a low bandwidth for low mains input voltages and a high bandwidth for high mains input voltages.

To compensate for the mains input voltage influence, the TEA1751LT contains a correction circuit. The average input voltage is measured using the VINSENSE pin and the information is fed to an internal compensation circuit. Using this compensation, it is possible to keep the regulation loop bandwidth constant over the mains input range. This feature yields a fast transient response on load steps, while still complying with class-D MHR requirements.

In a typical application, a resistor and two capacitors connected to the PFCCOMP pin set the bandwidth of the regulation loop.

7.2.5 Soft-start-up (pin PFCSENSE)

To prevent audible transformer noise at start-up or during hiccup, the soft-start function slowly increases the transformer peak current. This increase is achieved by inserting R_{SS1} and C_{SS1} between the PFCSENSE pin and the current sense resistor R_{SENSE1}.
An internal current source charges the capacitor to:

$$V_{PFCSENSE} = I_{start(soft)PFC} \times R_{SS1} \quad (1)$$

The voltage is limited to $V_{start(soft)PFC}$.

The start level and the time constant of the increasing primary current level are adjusted externally by changing the values of R_{SS1} and C_{SS1}.

$$\tau soft\text{–}start = 3 \times R_{SS1} \times C_{SS1} \quad (2)$$

The charging current $I_{start(soft)PFC}$ flows as long as $V_{PFCSENSE}$ is below 0.5 V. If $V_{PFCSENSE}$ exceeds 0.5 V, the soft-start current source starts limiting current $I_{start(soft)PFC}$. When the PFC starts switching, the $I_{start(soft)PFC}$ current source is switched off; see Figure 5.

All information provided in this document is subject to legal disclaimers.

© NXP B.V. 2013. All rights reserved.

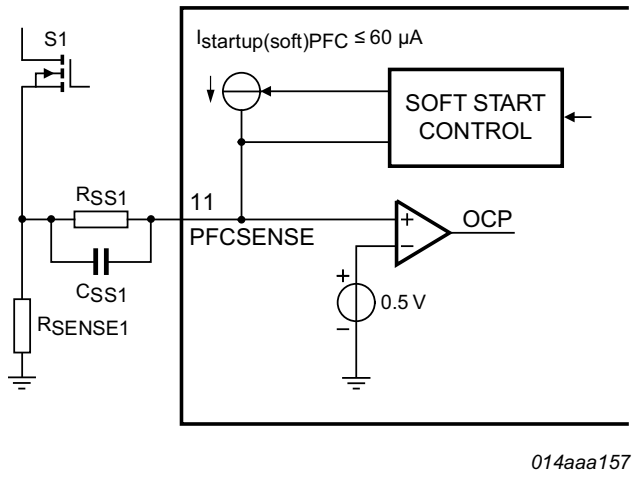

Fig 5. Soft-start-up of PFC

7.2.6 Low-power mode

When the output power of the flyback converter (see Section 7.3) is low, the flyback converter switches over to frequency reduction mode. The power factor correction circuit is then switched off to maintain high efficiency.

During low-power mode operation, the PFCCOMP pin is clamped to a minimum voltage of 2.7 V and a maximum voltage of 3.9 V. The lower clamp voltage limits the maximum power that is delivered when the PFC is switched on again. The upper clamp voltage ensures that the PFC returns to its normal regulation point in a limited time when returning from low-power mode.

When the flyback converter leaves the frequency reduction mode, the power factor correction circuit restores normal operation. To prevent continuous switching of the PFC circuit, a small hysteresis is built in (75 mV on the FBCTRL pin).

7.2.7 Dual-boost PFC

The mains input voltage modulates the PFC output voltage. The mains input voltage is measured using the VINSENSE pin. If the voltage on the VINSENSE pin drops below 2.2 V, the current is sourced from the VOSENSE pin. To ensure the stable switch-over, a 200 mV transition region is inserted around the 2.2 V, see Figure 6.

At low VINSENSE input voltages, the output current is 15 µA. This output current, in combination with the resistors on the VOSENSE pin, sets the lower PFC output voltage level at low mains voltages. At high mains input voltages, the current is switched to zero. The PFC output voltage is then at its maximum. As this current is zero in this situation, it does not affect the accuracy of the PFC output voltage.

To ensure proper switch-off, the VOSENSE current switches to its maximum value of 15 µA when the voltage on pin VOSENSE drops below 2.1 V.

All information provided in this document is subject to legal disclaimers.

© NXP B.V. 2013. All rights reserved.

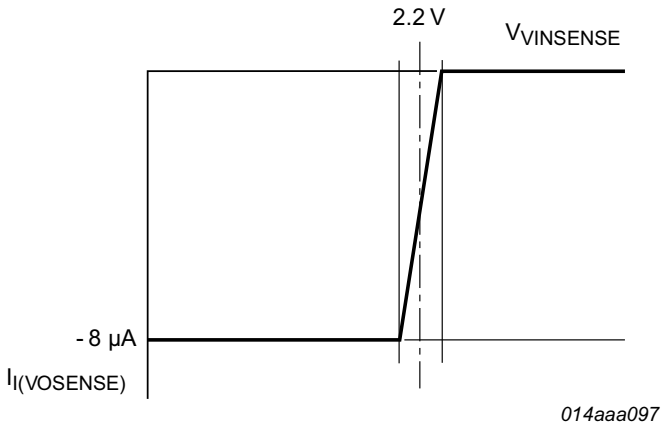

Fig 6. Voltage to current transfer function for dual boost PFC

7.2.8 Overcurrent protection (PFCSENSE pin)

The maximum peak current is limited cycle-by-cycle by sensing the voltage across an external sense resistor, R_{SENSE1}, on the source of the external MOSFET. The voltage is measured via the PFCSENSE pin.

7.2.9 Mains undervoltage lockout/brownout protection (VINSENSE pin)

To prevent the PFC from operating at very low mains input voltages, the voltage on the VINSENSE pin is continuously sensed. When the voltage on this pin drops below the $V_{stop(VINSENSE)}$ level, switching of the PFC is stopped.

The voltage on the VINSENSE pin is clamped to a minimum value, $V_{start(VINSENSE)} - \Delta V_{pu(VINSENSE)}$. This voltage clamping provides for a fast restart when the mains input voltage is restored after a mains dropout.

7.2.10 Overvoltage protection (VOSENSE pin)

To prevent output overvoltage during load steps and mains transients, an overvoltage protection circuit is built in.

When the voltage on the VOSENSE pin exceeds the $V_{OVP(VOSENSE)}$ level, switching of the power factor correction circuit is stopped. Switching of the PFC recommences when the VOSENSE pin voltage drops to less than $V_{OVP(VOSENSE)}$ again.

When the resistor between the VOSENSE pin and ground is open, the overvoltage protection is also triggered.

7.2.11 PFC open-loop protection (VOSENSE pin)

The power factor correction circuit does not start switching until the voltage on the VOSENSE pin exceeds the $V_{th(ol)(VOSENSE)}$ level. This feature protects the circuit from open-loop and VOSENSE short-circuit.

7.2.12 Driver (PFCDRIVER pin)

The driver circuit to the gate of the power MOSFET has a current sourcing capability of −500 mA and a current sink capability of 1.2 A. These capabilities permit fast turn-on and turn-off of the power MOSFET for efficient operation.

All information provided in this document is subject to legal disclaimers.

© NXP B.V. 2013. All rights reserved.

7.3 Flyback controller

The TEA1751LT includes a controller for a flyback converter. The flyback converter operates in quasi-resonant or DCM with valley switching. The auxiliary winding of the flyback transformer provides demagnetization detection and powers the IC after start-up.

7.3.1 Multimode operation

The TEA1751LT flyback controller operates in several modes; see Figure 7.

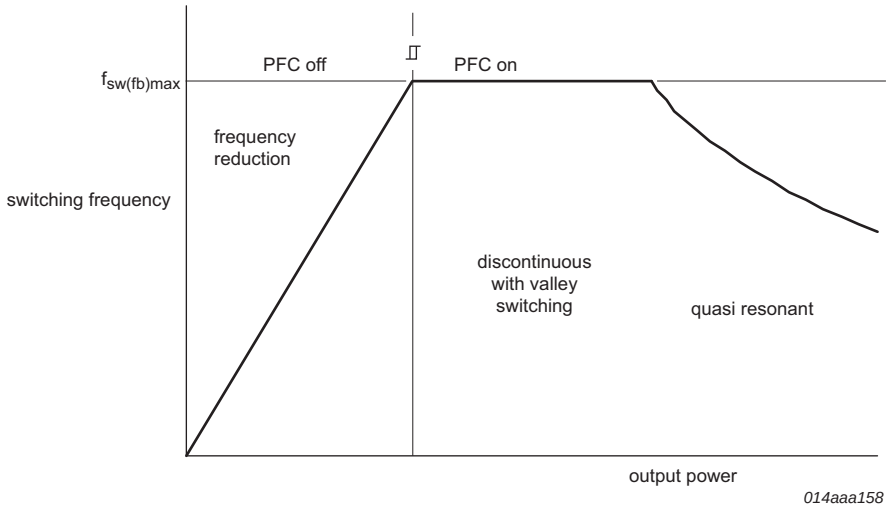

Fig 7. Multimode operation flyback

At high output power, the converter switches to quasi-resonant mode. The next converter stroke starts after demagnetization of the transformer and detection of the valley. In quasi-resonant mode switching losses are minimized. This minimization is achieved by the converter only switching on when the voltage across the external MOSFET is at its minimum (see also Section 7.3.2).

To prevent high frequency operation at low loads, the maximum switching frequency is limited to 125 kHz. When the frequency limit is reached, the quasi-resonant operation changes to DCM with valley skipping. The frequency limit reduces the MOSFET switch-on losses and conducted EMI.

A Voltage Controlled Oscillator (VCO) controls the frequency at very low power and standby levels. The minimum frequency is reduced to zero. During frequency reduction mode, the primary peak current is kept at 25 % of its maximum level to maintain a high efficiency. As the primary peak current is low in frequency reduction operation, no audible noise is noticeable at switching frequencies in the audible range. Valley switching is also active in this mode.

In frequency reduction mode, the PFC controller is switched off. The flyback maximum frequency changes linearly with the control voltage on the FBCTRL pin (see Figure 8). Hysteresis has been added for stable on and off switching of the PFC. At no-load operation, the switching frequency can be reduced to (almost) zero.

All information provided in this document is subject to legal disclaimers.

© NXP B.V. 2013. All rights reserved.

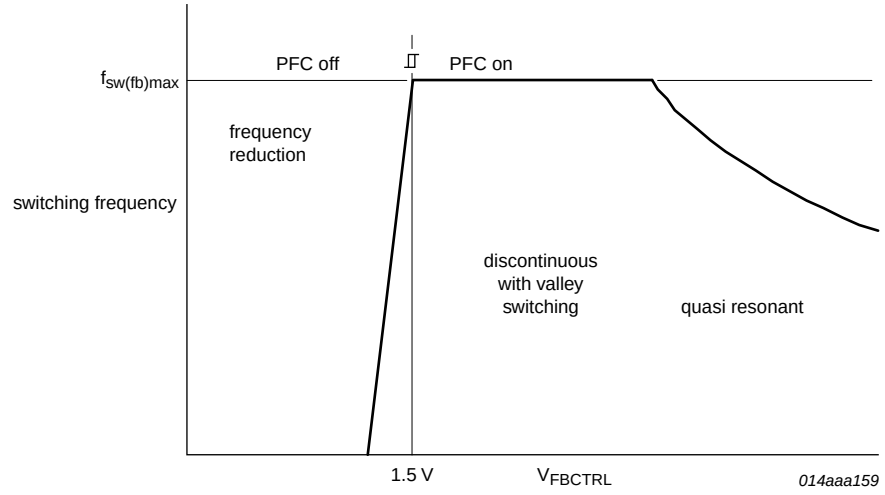

Fig 8. Frequency control of flyback

7.3.2 Valley switching (HV pin)

A new cycle starts when the external MOSFET is switched on. $V_{FBSENSE}$ and V_{FBCTRL} determine the on-time. The MOSFET is then switched off and the secondary stroke starts. After the secondary stroke, the drain voltage shows an oscillation with a frequency of approximately:

$$f = \frac{1}{[2 \times \pi \times \sqrt{(L_p \times C_d)}]} \quad (3)$$

where L_p is the primary self-inductance of the flyback transformer and C_d is the capacitance on the drain node.

When the internal oscillator voltage is high and the secondary stroke ended, the circuit waits for the lowest drain voltage before starting a new primary stroke.

Figure 9 shows the drain voltage, valley signal, secondary stroke signal and the internal oscillator signal.

Valley switching allows high frequency operation as capacitive switching losses are reduced, see Equation 4. High frequency operation makes small and cost-effective magnetic components possible.

$$P = \frac{1}{2} \times C_d \times V^2 \times f \quad (4)$$

All information provided in this document is subject to legal disclaimers.

© NXP B.V. 2013. All rights reserved.

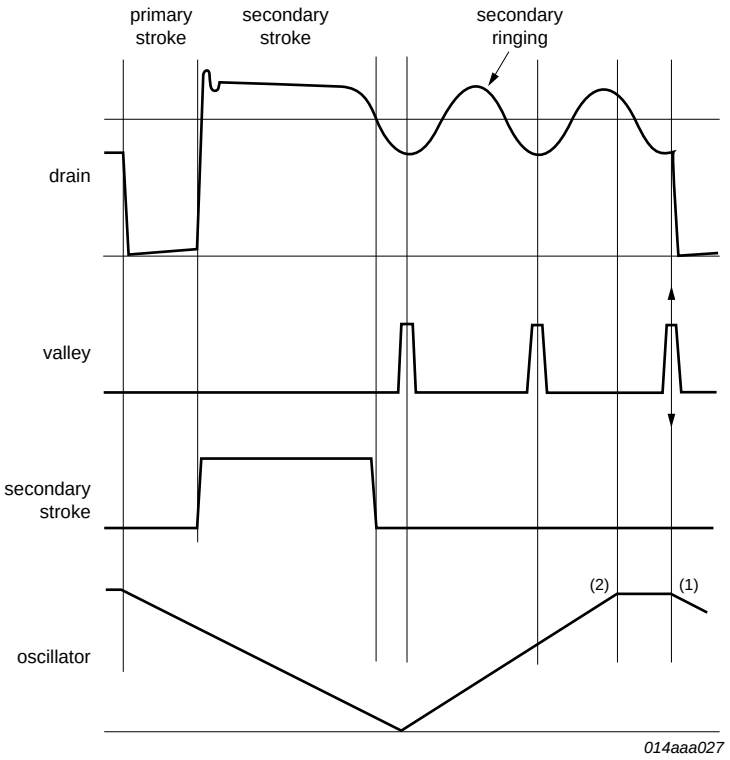

(1) Start of new cycle at lowest drain voltage.

(2) Start of new cycle in a classical Pulse Width Modulation (PWM) system without valley detection.

Fig 9. Signals for valley switching

7.3.3 Current mode control (FBSENSE pin)

Current mode control is used for the flyback converter because of its good line regulation.

The FBSENSE pin senses the primary current across an external resistor and compares it with an internal control voltage. The internal control voltage is proportional to the FBCTRL pin voltage, see Figure 10.

All information provided in this document is subject to legal disclaimers.

© NXP B.V. 2013. All rights reserved.

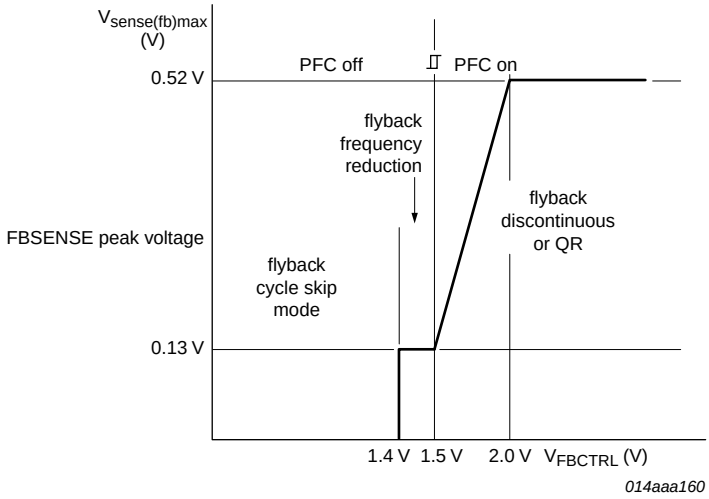

Fig 10. Peak current control of flyback

7.3.4 Demagnetization (FBAUX pin)

The system is always in QR or DCM mode. The internal oscillator does not start a new primary stroke until the previous secondary stroke has ended.

Demagnetization features a cycle-by-cycle output short-circuit protection by immediately lowering the frequency (longer off-time), thus reducing the power level.

Demagnetization recognition is suppressed during the first $t_{sup(xfmr_ring)}$ time of 2 μs. This suppression can be necessary at low output voltages and at start-up. It can also be required in applications where the transformer has a large leakage inductance.

If the FBAUX pin is open-circuit or not connected, a fault condition is assumed and the converter immediately stops. Operation restarts as soon as the fault condition is removed.

7.3.5 Flyback control/time-out (FBCTRL pin)

The FBCTRL pin is connected to an internal voltage source of 3.5 V using an internal resistor of 3 kΩ. When the voltage on this pin exceeds 2.5 V, the connection is disabled and the pin is biased with a small current. If the voltage on this pin exceeds 4.5 V, a fault is assumed, switching is inhibited and a restart is made.

If a capacitor and a resistor are connected in series to this pin, a time-out function is created to protect against an open control loop. See Figure 11 and Figure 12. The time-out function is disabled by connecting a resistor (100 kΩ) to ground on the FBCTRL pin.

If the pin is short-circuited to ground, switching of the flyback controller is prevented.

Under normal operating conditions, the converter regulates the output voltage. The voltage on the FBCTRL pin then varies between 1.4 V for the minimum output power and 2 V for the maximum output power.

All information provided in this document is subject to legal disclaimers.

© NXP B.V. 2013. All rights reserved.

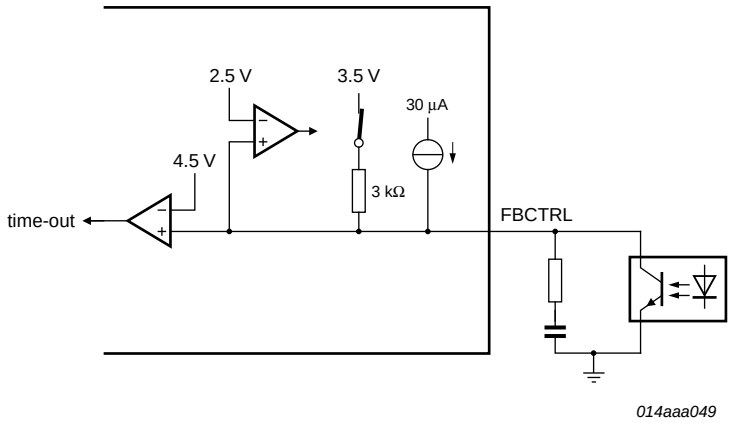

Fig 11. Time-out protection circuit

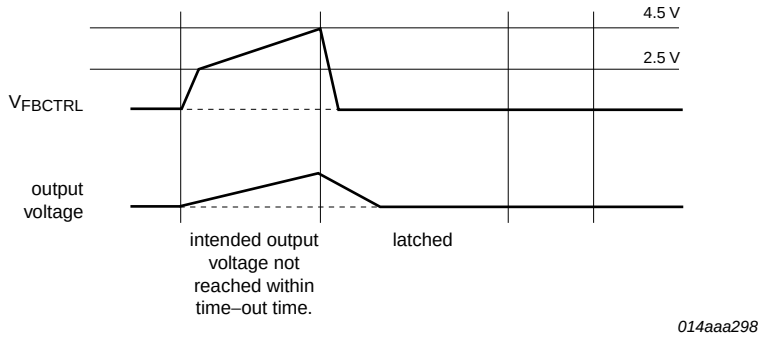

Fig 12. Time-out protection (signals), latched

7.3.6 Soft-start (FBSENSE pin)

To prevent audible transformer noise during start-up, the soft start function slowly increases the transformer peak current. This increase can be achieved by inserting a resistor and a capacitor between the FBSENSE pin and the current sense resistor.

An internal current source charges the capacitor to:

$$V = I_{start(soft)fb} \times R_{SS2} \quad (5)$$

with a maximum of approximately 0.5 V.

The start level and the time constant of the increasing primary current level are adjusted externally by changing the values of R_{SS2} and C_{SS2}.

$$\tau soft\text{–}start = 3 \times R_{SS2} \times C_{SS2} \quad (6)$$

The soft-start current $I_{start(soft)fb}$ is switched on as soon as V_{CC} reaches $V_{startup}$. When $V_{FBSENSE}$ reaches 0.5 V, the flyback converter starts switching.

All information provided in this document is subject to legal disclaimers.

© NXP B.V. 2013. All rights reserved.

The charging current $I_{start(soft)(FB)}$ flows as long as $V_{FBSENSE}$ is less than approximately 0.5 V. If $V_{FBSENSE}$ exceeds 0.5 V, the soft-start current source starts limiting the current. After the flyback converter has started, the soft-start current source is switched off.

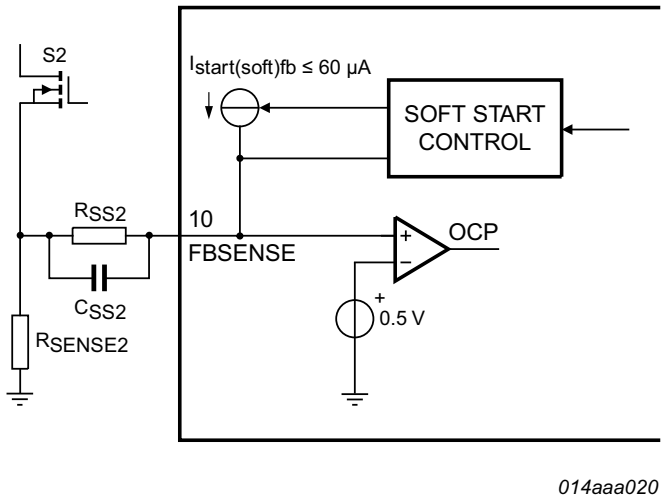

Fig 13. Soft-start up of flyback.

7.3.7 Maximum on-time

The flyback controller limits the on-time of the external MOSFET to 40 µs. When the on-time is longer than 40 µs, the IC stops switching and enters the safe restart mode.

7.3.8 Overvoltage protection (FBAUX pin)

An output overvoltage protection is implemented in the GreenChip III series. In the TEA1751LT, the auxiliary voltage is sensed using the current flowing into the FBAUX pin during the secondary stroke. The auxiliary winding voltage is a well-defined replica of the output voltage. An internal filter averages voltage spikes.

An internal up-down counter prevents false OVP detection which can occur during ESD or lightning events. The internal counter counts up by one when the output voltage exceeds the OVP trip level within one switching cycle. The internal counter counts down by two when the output voltage has not exceeded the OVP trip level within one switching cycle. When the counter has reached eight, the IC assumes a true OVP, sets the latched protection and switches off both converters.

The converter only restarts after the OVP latch is reset. In a typical application, the internal latch is reset when the VINSENSE voltage drops below 750 mV and is then raised to 870 mV.

The latched protection is also reset by removing both the voltage on the V_{CC} and HV pins.

The demagnetization resistor, R_{FBAUX} sets the output voltage $V_{o(OVP)}$ at which the OVP function trips:

$$V_{o(OVP)} = \frac{N_s}{N_{aux}}(I_{ovp(FBAUX)} \times R_{FBAUX} + V_{clamp(FBAUX)}) \quad (7)$$

All information provided in this document is subject to legal disclaimers.

© NXP B.V. 2013. All rights reserved.

where N_s is the number of secondary turns and N_{aux} is the number of auxiliary turns of the transformer. Current $I_{ovp(FBAUX)}$ is internally trimmed.

Accurate OVP detection is made possible by adjusting the value of R_{FBAUX} to the turns ratio of the transformer.

7.3.9 Overcurrent protection (FBSENSE pin)

The primary peak current in the transformer is measured accurately cycle-by-cycle using the external sense resistor R_{sense2}. V_{FBCTRL}sets the level to which the OCP circuit limits $V_{FBSENSE}$ (see Section 7.3.3). The OCP detection is suppressed during the leading-edge blanking period, t_{leb}, to prevent false triggering due to switch-on spikes.

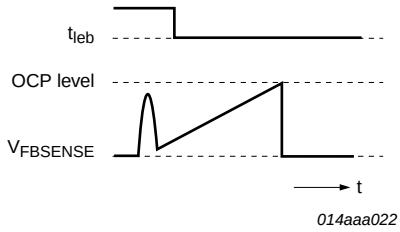

Fig 14. OCP leading-edge blanking

7.3.10 Overpower protection

During the primary stroke of the flyback converter, the input voltage is measured by sensing the current drawn from the FBAUX pin.

The current information is used to adjust the peak drain current of the flyback converter, measured from the FBSENSE pin. The internal compensation is such, that a maximum output power is realized which is almost independent of the input voltage.

The OPP curve is given in Figure 15.

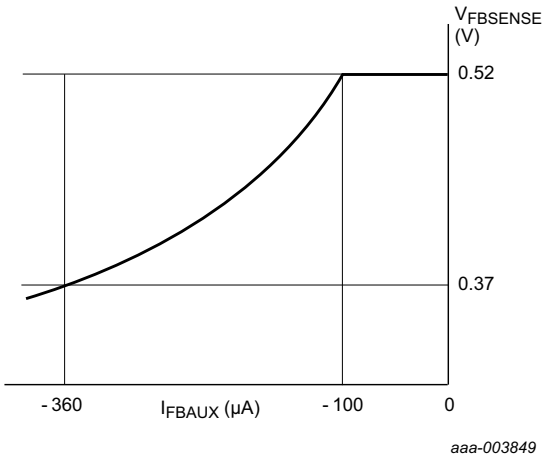

Fig 15. Overpower protection curve

All information provided in this document is subject to legal disclaimers.

© NXP B.V. 2013. All rights reserved.

7.3.11 Driver (FBDRIVER pin)

The driver circuit to the power MOSFET gate has a current sourcing capability of −500 mA and a current sink capability of 1.2 A. These capabilities permit fast turn-on and turn-off of the power MOSFET, thus ensuring efficient operation.

8. Limiting values

Table 3. Limiting values

In accordance with the Absolute Maximum Rating System (IEC 60134).

Symbol	Parameter	Conditions	Min	Max	Unit
Voltages					
V_{CC}	supply voltage		−0.4	+38	V
V_{LATCH}	voltage on the LATCH pin	current limited	−0.4	+5	V
V_{FBCTRL}	voltage on the FBCTRL pin		−0.4	+5	V
$V_{PFCCOMP}$	voltage on the PFCCOMP pin		−0.4	+5	V
$V_{VINSENSE}$	voltage on the VINSENSE pin		−0.4	+5	V
$V_{VOSENSE}$	voltage on the VOSENSE pin		−0.4	+5	V
V_{PFCAUX}	voltage on the PFCAUX pin		−25	+25	V
$V_{FBSENSE}$	voltage on the FBSENSE pin	current limited	−0.4	+5	V
$V_{PFCSENSE}$	voltage on the PFCSENSE pin	current limited	−0.4	+5	V
V_{HV}	voltage on the HV pin		−0.4	+650	V
Currents					
I_{FBCTRL}	current on the FBCTRL pin		−3	0	mA
I_{FBAUX}	current on the FBAUX pin		−1	+1	mA
$I_{PFCSENSE}$	current on the PFCSENSE pin		−1	+10	mA
$I_{FBSENSE}$	current on the FBSENSE pin		−1	+10	mA
$I_{FBDRIVER}$	current on the FBDRIVER pin	duty cycle < 10 %	−0.8	+2	A
$I_{PFCDRIVER}$	current on the PFCDRIVER pin	duty cycle < 10 %	−0.8	+2	A
I_{HV}	current on the HV pin		-	8	mA
General					
P_{tot}	total power dissipation	T_{amb} < 75 °C	-	0.6	W
T_{stg}	storage temperature		−55	+150	°C
T_j	junction temperature		−40	+150	°C

All information provided in this document is subject to legal disclaimers.

© NXP B.V. 2013. All rights reserved.

Table 3. Limiting values *...continued*

In accordance with the Absolute Maximum Rating System (IEC 60134).

Symbol	Parameter	Conditions		Min	Max	Unit
ESD						
V_{ESD}	electrostatic discharge voltage	class 1				
		human body model				
		pins 1 to 13	[1]	-	2000	V
		pin 16 (HV)	[1]	-	1500	V
		machine model	[2]	-	200	V
		charged device model		-	500	V

[1] Equivalent to discharging a 100 pF capacitor through a 1.5 kΩ series resistor.

[2] Equivalent to discharging a 200 pF capacitor through a 0.75 μH coil and a 10 Ω resistor.

9. Thermal characteristics

Table 4. Thermal characteristics

Symbol	Parameter	Conditions	Typ	Unit
$R_{th(j-a)}$	thermal resistance from junction to ambient	in free air; JEDEC test board	124	K/W
$R_{th(j-c)}$	thermal resistance from junction to case	in free air; JEDEC test board	37	K/W

10. Characteristics

Table 5. Characteristics

T_{amb} = 25 °C; V_{CC} = 20 V; all voltages are measured with respect to ground; currents are positive when flowing into the IC; unless otherwise specified.

Symbol	Parameter	Conditions	Min	Typ	Max	Unit
Start-up current source (HV pin)						
I_{HV}	current on the HV pin	V_{HV} > 80 V				
		$V_{CC} < V_{trip}$; $V_{th(UVLO)} < V_{CC} < V_{startup}$	-	1.0	-	mA
		$V_{trip} < V_{CC} < V_{th(UVLO)}$	-	5.4	-	mA
		with auxiliary supply	8	20	40	μA
V_{BR}	breakdown voltage		650	-	-	V
Supply voltage management (V_{CC} pin)						
V_{trip}	trip voltage		0.55	0.65	0.75	V
$V_{startup}$	start-up voltage		21	22	23	V
$V_{th(UVLO)}$	undervoltage lockout threshold voltage		14	15	16	V
$V_{start(hys)}$	hysteresis of start voltage	during start-up phase	-	300	-	mV
V_{hys}	hysteresis voltage	$V_{startup} - V_{th(UVLO)}$	6.3	7	7.7	V
$I_{ch(low)}$	low charging current	V_{HV} > 80 V; $V_{CC} < V_{trip}$ or $V_{th(UVLO)} < V_{CC} < V_{startup}$	−1.2	−1.0	−0.8	mA

All information provided in this document is subject to legal disclaimers.

© NXP B.V. 2013. All rights reserved.

Table 5. Characteristics *...continued*

T_{amb} = 25 °C; V_{CC} = 20 V; all voltages are measured with respect to ground; currents are positive when flowing into the IC; unless otherwise specified.

Symbol	Parameter	Conditions		Min	Typ	Max	Unit
$I_{ch(high)}$	high charging current	V_{HV} > 80 V; V_{trip} < V_{CC} < $V_{th(UVLO)}$		–4.6	–5.4	–6.3	mA
$I_{CC(oper)}$	operating supply current	no-load on the FBDRIVER and PFCDRIVER pins		2.25	3	3.75	mA
Input Voltage Sensing PFC (VINSENSE pin)							
$V_{stop(VINSENSE)}$	stop voltage on the VINSENSE pin			0.86	0.89	0.92	V
$V_{start(VINSENSE)}$	start voltage on the VINSENSE pin			1.11	1.15	1.19	V
$\Delta V_{pu(VINSENSE)}$	pull-up voltage difference on the VINSENSE pin	active after $V_{stop(VINSENSE)}$ is detected		-	100	-	mV
$I_{pu(VINSENSE)}$	pull-up current on the VINSENSE pin	active after $V_{stop(VINSENSE)}$ is detected		–55	–47	–40	µA
$V_{mvc(VINSENSE)max}$	maximum mains voltage compensation voltage on the VINSENSE pin			4	-	-	V
V_{flr}	fast latch reset voltage	active after $V_{th(UVLO)}$ is detected		-	0.75	-	V
$V_{flr(hys)}$	hysteresis of fast latch reset voltage			-	0.12	-	V
$I_{I(VINSENSE)}$	input current on the VINSENSE pin	$V_{VINSENSE}$ > $V_{stop(VINSENSE)}$ after $V_{start(VINSENSE)}$ is detected		5	33	100	nA
$V_{bst(dual)}$	dual boost voltage	current switch-over point		-	2.2	-	V
		switch-over region		-	200	-	mV
Loop compensation PFC (PFCCOMP pin)							
g_m	transconductance	$V_{VOSENSE}$ to $I_{O(PFCCOMP)}$		60	80	100	µA/V
$I_{O(PFCCOMP)}$	output current on the PFCCOMP pin	$V_{VOSENSE}$ = 3.3 V		33	39	45	µA
		$V_{VOSENSE}$ = 2 V		–45	–39	–33	µA
$V_{clamp(PFCCOMP)}$	clamp voltage on the PFCCOMP pin	Low-power mode; PFC off; lower clamp voltage.	[1]	2.5	2.7	2.9	V
		Upper clamp voltage	[1]	-	3.9	-	V
$V_{ton(PFCCOMP)zero}$	zero on-time voltage on the PFCCOMP pin			3.4	3.5	3.6	V
$V_{ton(PFCCOMP)max}$	maximum on-time voltage on the PFCCOMP pin			1.20	1.25	1.30	V
Pulse-width modulator PFC							
$t_{on(PFC)}$	PFC on-time	$V_{VINSENSE}$ = 3.3 V; $V_{PFCCOMP}$ = $V_{ton(PFCCOMP)max}$		3.6	4.5	5	µs
		$V_{VINSENSE}$ = 0.9 V; $V_{PFCCOMP}$ = $V_{ton(PFCCOMP)max}$		30	40	53	µs
Output voltage sensing PFC (VOSENSE pin)							
$V_{th(ol)(VOSENSE)}$	open-loop threshold voltage on the VOSENSE pin			-	1.15	-	V
$V_{reg(VOSENSE)}$	regulation voltage on the VOSENSE pin	for $I_{O(PFCCOMP)}$ = 0		2.475	2.500	2.525	V

All information provided in this document is subject to legal disclaimers.

© NXP B.V. 2013. All rights reserved.

Table 5. Characteristics *...continued*

T_{amb} = 25 °C; V_{CC} = 20 V; all voltages are measured with respect to ground; currents are positive when flowing into the IC; unless otherwise specified.

Symbol	Parameter	Conditions		Min	Typ	Max	Unit
$V_{ovp(VOSENSE)}$	overvoltage protection voltage on the VOSENSE pin			2.60	2.63	2.67	V
$I_{bst(dual)}$	dual boost current	$V_{VINSENSE} < V_{bst(dual)}$ or $V_{VOSENSE} < 2.1$ V		-	–15	–	µA
		$V_{VINSENSE} > V_{bst(dual)}$		-	–30	-	nA
Over current protection PFC (PFCSENSE pin)							
$V_{sense(PFC)max}$	maximum PFC sense voltage	$\Delta V/\Delta t$ = 50 mV/µs		0.49	0.52	0.55	V
		$\Delta V/\Delta t$ = 200 mV/µs		0.51	0.54	0.57	V
$t_{leb(PFC)}$	PFC leading edge blanking time			250	310	370	ns
$I_{prot(PFCSENSE)}$	protection current on the PFCSENSE pin			–50	-	–5	nA
Soft-start PFC (PFCSENSE pin)							
$I_{start(soft)PFC}$	PFC soft-start current			–75	–60	–45	µA
$V_{start(soft)PFC}$	PFC soft-start voltage	enabling voltage		0.46	0.50	0.54	V
$V_{stop(soft)PFC}$	PFC soft-stop voltage	disabling voltage		0.42	0.45	0.48	V
Oscillator PFC							
$f_{sw(PFC)max}$	maximum PFC switching frequency			100	125	150	kHz
$t_{off(PFC)min}$	minimum PFC off-time			1.1	1.4	1.7	µs
Valley switching PFC (PFCAUX pin)							
$(\Delta V/\Delta t)_{vrec(PFC)}$	PFC valley recognition voltage change with time			-	-	1.7	V/µs
$t_{vrec(PFC)}$	PFC valley recognition time	V_{PFCAUX} = 1 V peak-to-peak	[2]	-	-	300	ns
		demagnetization to $\Delta V/\Delta t$ = 0	[3]	-	-	50	ns
$t_{to(vrec)PFC}$	PFC valley recognition time-out time			3	4	6	µs
Demagnetization management PFC (PFCAUX pin)							
$V_{th(comp)PFCAUX}$	comparator threshold voltage on the PFCAUX pin			–150	–100	–50	mV
$t_{to(demag)PFC}$	PFC demagnetization time-out time			40	50	60	µs
$I_{prot(PFCAUX)}$	protection current on the PFCAUX pin	V_{PFCAUX} = 50 mV		–75	-	–5	nA
Driver (PFCDRIVER pin)							
$I_{src(PFCDRIVER)}$	source current on the PFCDRIVER pin	$V_{PFCDRIVER}$ = 2 V		-	–0.5	-	A
$I_{sink(PFCDRIVER)}$	sink current on the PFCDRIVER pin	$V_{PFCDRIVER}$ = 2 V		-	0.7	-	A
		$V_{PFCDRIVER}$ = 10 V		-	1.2	-	A
$V_{O(PFCDRIVER)max}$	maximum output voltage on the PFCDRIVER pin			9.5	10.8	12	V

All information provided in this document is subject to legal disclaimers.

© NXP B.V. 2013. All rights reserved.

Table 5. Characteristics *…continued*

T_{amb} = 25 °C; V_{CC} = 20 V; all voltages are measured with respect to ground; currents are positive when flowing into the IC; unless otherwise specified.

Symbol	Parameter	Conditions	Min	Typ	Max	Unit
OverVoltage Protection flyback (FBAUX pin)						
$I_{ovp(FBAUX)}$	overvoltage protection current on the FBAUX pin		279	300	321	µA
$N_{cy(ovp)}$	number of overvoltage protection cycles		6	8	12	
Demagnetization management flyback (FBAUX pin)						
$V_{th(comp)FBAUX}$	comparator threshold voltage on the FBAUX pin		60	80	110	mV
$I_{prot(FBAUX)}$	protection current on the FBAUX pin	V_{FBAUX} = 50 mV	–75	-	–5	nA
$V_{clamp(FBAUX)}$	clamp voltage on the FBAUX pin	I_{FBAUX} = –100 µA	–0.85	–0.7	–0.55	V
		I_{FBAUX} = 300 µA	0.79	0.94	1.09	V
$t_{sup(xfmr_ring)}$	transformer ringing suppression time		1.5	2	2.5	µs
Pulse-width modulator flyback						
$t_{on(fb)min}$	minimum flyback on-time		-	t_{leb}	-	ns
$t_{on(fb)max}$	maximum flyback on-time		32	40	48	µs
Oscillator flyback						
$f_{sw(fb)max}$	maximum flyback switching frequency		100	125	150	kHz
$V_{start(VCO)FBCTRL}$	VCO start voltage on the FBCTRL pin		1.3	1.5	1.7	V
$V_{hys(FBCTRL)}$	hysteresis voltage on pin FBCTRL	[4]	-	75	-	mV
$\Delta V_{VCO(FBCTRL)}$	VCO voltage difference on the FBCTRL pin		-	–0.12	-	V
Peak current control flyback (FBCTRL pin)						
V_{FBCTRL}	voltage on the FBCTRL pin	for maximum flyback peak current	1.85	2	2.15	V
$V_{to(FBCTRL)}$	time-out voltage on the FBCTRL pin	enable voltage	-	2.5	-	V
		trip voltage	4.2	4.5	4.8	V
$R_{int(FBCTRL)}$	internal resistance on the FBCTRL pin		-	3	-	kΩ
$I_{O(FBCTRL)}$	output current on the FBCTRL pin	V_{FBCTRL} = 0 V	–1.4	–1.19	–0.93	mA
		V_{FBCTRL} = 2 V	–0.6	–0.5	–0.4	mA
$I_{to(FBCTRL)}$	time-out current on the FBCTRL pin	V_{FBCTRL} = 2.6 V	–36	–30	–24	µA
		V_{FBCTRL} = 4.1 V	–34.5	–28.5	–22.5	µA
Valley switching flyback (HV pin)						
$(\Delta V/\Delta t)_{vrec(fb)}$	flyback valley recognition voltage change with time		–75	-	+75	V/µs
$t_{d(vrec-swon)}$	valley recognition to switch on delay time	[5]	-	150	-	ns
Soft-start flyback (FBSENSE pin)						

All information provided in this document is subject to legal disclaimers.

© NXP B.V. 2013. All rights reserved.

Table 5. Characteristics *...continued*

T_{amb} = 25 °C; V_{CC} = 20 V; all voltages are measured with respect to ground; currents are positive when flowing into the IC; unless otherwise specified.

Symbol	Parameter	Conditions	Min	Typ	Max	Unit
$I_{start(soft)fb}$	flyback soft-start current		−75	−60	−45	µA
$V_{start(soft)fb}$	flyback soft-start voltage	enable voltage	0.43	0.49	0.54	V
Overcurrent protection flyback (FBSENSE pin)						
$V_{sense(fb)max}$	maximum flyback sense voltage	$\Delta V/\Delta t$ = 50 mV/µs	0.49	0.52	0.55	V
		$\Delta V/\Delta t$ = 200 mV/µs	0.52	0.55	0.58	V
$t_{leb(fb)}$	flyback leading edge blanking time		255	305	355	ns
Overpower protection flyback (FBSENSE pin)						
$V_{sense(fb)max}$	maximum flyback sense voltage	$\Delta V/\Delta t$ = 50 mV/µs				
		I_{FBAUX} = 80 µA	0.49	0.52	0.55	V
		I_{FBAUX} = 120 µA	0.46	0.50	0.54	V
		I_{FBAUX} = 240 µA	0.38	0.42	0.46	V
		I_{FBAUX} = 360 µA	0.34	0.38	0.42	V
Driver (FBDRIVER pin)						
$I_{src(FBDRIVER)}$	source current on the FBDRIVER pin	$V_{FBDRIVER}$ = 2 V	-	−0.5	-	A
$I_{sink(FBDRIVER)}$	sink current on the FBDRIVER pin	$V_{FBDRIVER}$ = 2 V	-	0.7	-	A
		$V_{FBDRIVER}$ = 10 V	-	1.2	-	A
$V_{O(FBDRIVER)(max)}$	maximum output voltage on the FBDRIVER pin		9.5	10.8	12	V
LATCH input (LATCH pin)						
$V_{prot(LATCH)}$	protection voltage on the LATCH pin		1.23	1.25	1.27	V
$I_{O(LATCH)}$	output current on the LATCH pin	$V_{prot(LATCH)} < V_{LATCH} < V_{oc(LATCH)}$	−85	−80	−75	µA
$V_{en(LATCH)}$	enable voltage on the LATCH pin	at start-up	1.30	1.35	1.40	V
$V_{hys(LATCH)}$	hysteresis voltage on the LATCH pin	$V_{en(LATCH)} - V_{prot(LATCH)}$	80	100	140	mV
$V_{oc(LATCH)}$	open-circuit voltage on the LATCH pin		2.65	2.9	3.15	V
Temperature protection						
$T_{pl(IC)}$	IC protection level temperature		130	140	150	°C
$T_{pl(IC)hys}$	hysteresis of IC protection level temperature		-	10	-	°C

[1] Applies to a typical application with a compensation network on the PFCCOMP pin, like the example in Figure 3.

[2] Minimum required voltage change time for valley recognition on the PFCAUX pin.

[3] Minimum time required between demagnetization detection and $\Delta V/\Delta t$ = 0 on the PFCAUX pin.

[4] Hysteresis for PFC on/off control.

[5] Guaranteed by design.

All information provided in this document is subject to legal disclaimers.

© NXP B.V. 2013. All rights reserved.

11. Application information

A power supply with the TEA1751LT consists of a power factor correction circuit and a flyback converter. See Figure 16.

Capacitor C_{VCC} buffers the IC supply voltage. The IC is powered from the high voltage rectified mains during start-up and the auxiliary winding of the flyback converter during operation. Sense resistors R_{SENSE1} and R_{SENSE2} convert the current through the MOSFETs S1 and S2 into a voltage at pins PFCSENSE and FBSENSE. The values of R_{SENSE1} and R_{SENSE2} define the maximum primary peak current in MOSFETs S1 and S2.

In the example given, the LATCH pin is connected to a Negative Temperature Coefficient (NTC) resistor. The protection is activated when the resistance drops below a value calculated as follows:

$$\frac{V_{prot(LATCH)}}{I_{O(LATCH)}} = 15.6\ \text{k}\Omega \quad (8)$$

A capacitor $C_{TIMEOUT}$ is connected to the FBCTRL pin. R_{LOOP} is added so that the time-out capacitor does not interfere with the normal regulation loop.

R_{S1} and R_{S2} are added to prevent the soft-start capacitors from being charged during normal operation due to negative voltage spikes across the sense resistors.

Resistor R_{AUX1} is added to protect the IC from damage during lightning events.

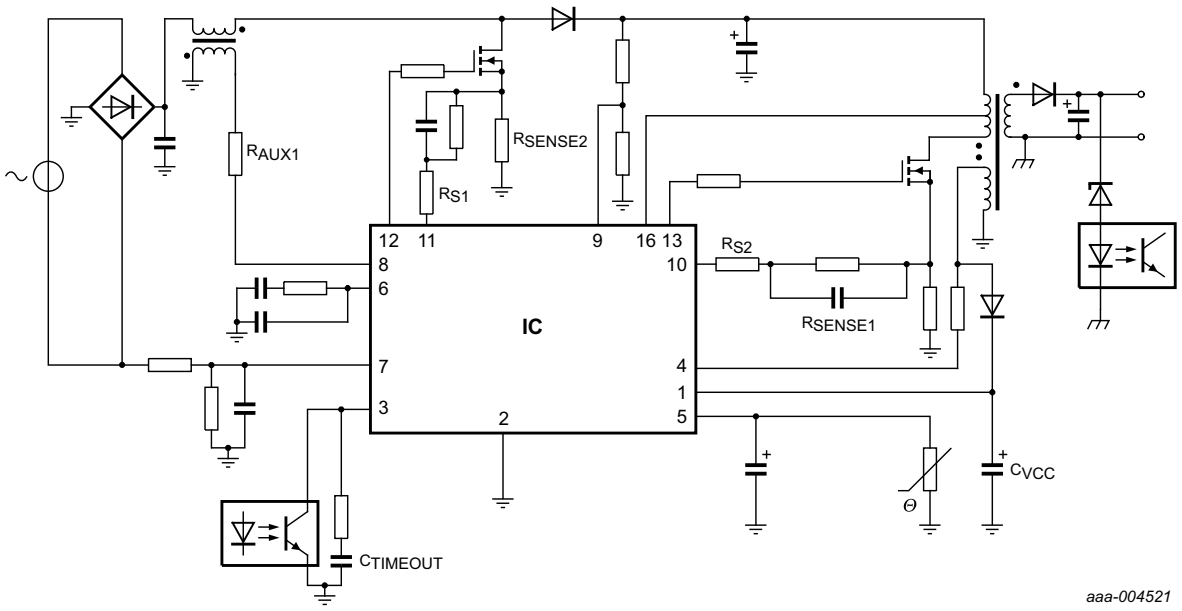

Fig 16. Typical application diagram for the TEA1751LT

All information provided in this document is subject to legal disclaimers.

© NXP B.V. 2013. All rights reserved.

12. Package outline

SO16: plastic small outline package; 16 leads; body width 3.9 mm **SOT109-1**

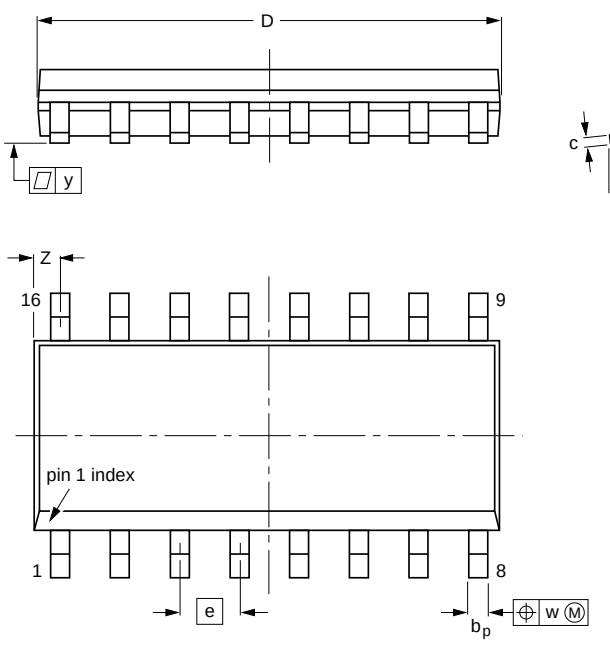

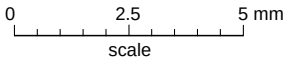

DIMENSIONS (inch dimensions are derived from the original mm dimensions)

UNIT	A max.	A_1	A_2	A_3	b_p	c	$D^{(1)}$	$E^{(1)}$	e	H_E	L	L_p	Q	v	w	y	$Z^{(1)}$	θ
mm	1.75	0.25 0.10	1.45 1.25	0.25	0.49 0.36	0.25 0.19	10.0 9.8	4.0 3.8	1.27	6.2 5.8	1.05	1.0 0.4	0.7 0.6	0.25	0.25	0.1	0.7 0.3	8° 0°
inches	0.069	0.010 0.004	0.057 0.049	0.01	0.019 0.014	0.0100 0.0075	0.39 0.38	0.16 0.15	0.05	0.244 0.228	0.041	0.039 0.016	0.028 0.020	0.01	0.01	0.004	0.028 0.012	

Note

1. Plastic or metal protrusions of 0.15 mm (0.006 inch) maximum per side are not included.

OUTLINE VERSION	REFERENCES				EUROPEAN PROJECTION	ISSUE DATE
	IEC	JEDEC	JEITA			
SOT109-1	076E07	MS-012				~~99-12-27~~ 03-02-19

Fig 17. Package outline SOT109-1 (SO16)

All information provided in this document is subject to legal disclaimers.

© NXP B.V. 2013. All rights reserved.

13. Revision history

Table 6. Revision history

Document ID	Release date	Data sheet status	Change notice	Supersedes
TEA1751LT v.3	20130109	Product data sheet		TEA1751LT v.2
Modifications:	• Multiple text changes • Multiple graphic updates • Updates to several characteristics			
TEA1751LT v.2	20110408	Product data sheet	-	TEA1751LT v.1
TEA1751LT v.1	20110304	Objective data sheet	-	-

All information provided in this document is subject to legal disclaimers.

© NXP B.V. 2013. All rights reserved.

14. Legal information

14.1 Data sheet status

Document status[1][2]	Product status[3]	Definition
Objective [short] data sheet	Development	This document contains data from the objective specification for product development.
Preliminary [short] data sheet	Qualification	This document contains data from the preliminary specification.
Product [short] data sheet	Production	This document contains the product specification.

[1] Please consult the most recently issued document before initiating or completing a design.

[2] The term 'short data sheet' is explained in section "Definitions".

[3] The product status of device(s) described in this document may have changed since this document was published and may differ in case of multiple devices. The latest product status information is available on the Internet at URL http://www.nxp.com.

14.2 Definitions

Draft — The document is a draft version only. The content is still under internal review and subject to formal approval, which may result in modifications or additions. NXP Semiconductors does not give any representations or warranties as to the accuracy or completeness of information included herein and shall have no liability for the consequences of use of such information.

Short data sheet — A short data sheet is an extract from a full data sheet with the same product type number(s) and title. A short data sheet is intended for quick reference only and should not be relied upon to contain detailed and full information. For detailed and full information see the relevant full data sheet, which is available on request via the local NXP Semiconductors sales office. In case of any inconsistency or conflict with the short data sheet, the full data sheet shall prevail.

Product specification — The information and data provided in a Product data sheet shall define the specification of the product as agreed between NXP Semiconductors and its customer, unless NXP Semiconductors and customer have explicitly agreed otherwise in writing. In no event however, shall an agreement be valid in which the NXP Semiconductors product is deemed to offer functions and qualities beyond those described in the Product data sheet.

14.3 Disclaimers

Limited warranty and liability — Information in this document is believed to be accurate and reliable. However, NXP Semiconductors does not give any representations or warranties, expressed or implied, as to the accuracy or completeness of such information and shall have no liability for the consequences of use of such information. NXP Semiconductors takes no responsibility for the content in this document if provided by an information source outside of NXP Semiconductors.

In no event shall NXP Semiconductors be liable for any indirect, incidental, punitive, special or consequential damages (including - without limitation - lost profits, lost savings, business interruption, costs related to the removal or replacement of any products or rework charges) whether or not such damages are based on tort (including negligence), warranty, breach of contract or any other legal theory.

Notwithstanding any damages that customer might incur for any reason whatsoever, NXP Semiconductors' aggregate and cumulative liability towards customer for the products described herein shall be limited in accordance with the *Terms and conditions of commercial sale* of NXP Semiconductors.

Right to make changes — NXP Semiconductors reserves the right to make changes to information published in this document, including without limitation specifications and product descriptions, at any time and without notice. This document supersedes and replaces all information supplied prior to the publication hereof.

Suitability for use — NXP Semiconductors products are not designed, authorized or warranted to be suitable for use in life support, life-critical or safety-critical systems or equipment, nor in applications where failure or malfunction of an NXP Semiconductors product can reasonably be expected to result in personal injury, death or severe property or environmental damage. NXP Semiconductors and its suppliers accept no liability for inclusion and/or use of NXP Semiconductors products in such equipment or applications and therefore such inclusion and/or use is at the customer's own risk.

Applications — Applications that are described herein for any of these products are for illustrative purposes only. NXP Semiconductors makes no representation or warranty that such applications will be suitable for the specified use without further testing or modification.

Customers are responsible for the design and operation of their applications and products using NXP Semiconductors products, and NXP Semiconductors accepts no liability for any assistance with applications or customer product design. It is customer's sole responsibility to determine whether the NXP Semiconductors product is suitable and fit for the customer's applications and products planned, as well as for the planned application and use of customer's third party customer(s). Customers should provide appropriate design and operating safeguards to minimize the risks associated with their applications and products.

NXP Semiconductors does not accept any liability related to any default, damage, costs or problem which is based on any weakness or default in the customer's applications or products, or the application or use by customer's third party customer(s). Customer is responsible for doing all necessary testing for the customer's applications and products using NXP Semiconductors products in order to avoid a default of the applications and the products or of the application or use by customer's third party customer(s). NXP does not accept any liability in this respect.

Limiting values — Stress above one or more limiting values (as defined in the Absolute Maximum Ratings System of IEC 60134) will cause permanent damage to the device. Limiting values are stress ratings only and (proper) operation of the device at these or any other conditions above those given in the Recommended operating conditions section (if present) or the Characteristics sections of this document is not warranted. Constant or repeated exposure to limiting values will permanently and irreversibly affect the quality and reliability of the device.

Terms and conditions of commercial sale — NXP Semiconductors products are sold subject to the general terms and conditions of commercial sale, as published at http://www.nxp.com/profile/terms, unless otherwise agreed in a valid written individual agreement. In case an individual agreement is concluded only the terms and conditions of the respective agreement shall apply. NXP Semiconductors hereby expressly objects to applying the customer's general terms and conditions with regard to the purchase of NXP Semiconductors products by customer.

No offer to sell or license — Nothing in this document may be interpreted or construed as an offer to sell products that is open for acceptance or the grant, conveyance or implication of any license under any copyrights, patents or other industrial or intellectual property rights.

All information provided in this document is subject to legal disclaimers.

© NXP B.V. 2013. All rights reserved.

Export control — This document as well as the item(s) described herein may be subject to export control regulations. Export might require a prior authorization from competent authorities.

Non-automotive qualified products — Unless this data sheet expressly states that this specific NXP Semiconductors product is automotive qualified, the product is not suitable for automotive use. It is neither qualified nor tested in accordance with automotive testing or application requirements. NXP Semiconductors accepts no liability for inclusion and/or use of non-automotive qualified products in automotive equipment or applications.

In the event that customer uses the product for design-in and use in automotive applications to automotive specifications and standards, customer (a) shall use the product without NXP Semiconductors' warranty of the product for such automotive applications, use and specifications, and (b) whenever customer uses the product for automotive applications beyond NXP Semiconductors' specifications such use shall be solely at customer's own risk, and (c) customer fully indemnifies NXP Semiconductors for any liability, damages or failed product claims resulting from customer design and use of the product for automotive applications beyond NXP Semiconductors' standard warranty and NXP Semiconductors' product specifications.

Translations — A non-English (translated) version of a document is for reference only. The English version shall prevail in case of any discrepancy between the translated and English versions.

14.4 Trademarks

Notice: All referenced brands, product names, service names and trademarks are the property of their respective owners.

GreenChip — is a trademark of NXP B.V.

15. Contact information

For more information, please visit: **http://www.nxp.com**

For sales office addresses, please send an email to: **salesaddresses@nxp.com**

All information provided in this document is subject to legal disclaimers.

© NXP B.V. 2013. All rights reserved.

16. Contents

1 General description 1
2 Features and benefits 2
2.1 Distinctive features 2
2.2 Green features 2
2.3 PFC green features 2
2.4 Flyback green features 2
2.5 Protection features 2
3 Applications 2
4 Ordering information 3
5 Block diagram 4
6 Pinning information 5
6.1 Pinning 5
6.2 Pin description 5
7 Functional description 6
7.1 General control 6
7.1.1 Start-up and UnderVoltage LockOut (UVLO) . . 6
7.1.2 Supply management 8
7.1.3 Latch input 8
7.1.4 Fast latch reset 9
7.1.5 Overtemperature protection 9
7.2 Power factor correction circuit 9
7.2.1 t_{on} control 9
7.2.2 Valley switching and demagnetization (PFCAUX pin) 9
7.2.3 Frequency limitation 10
7.2.4 Mains voltage compensation (VINSENSE pin) 10
7.2.5 Soft-start-up (pin PFCSENSE) 10
7.2.6 Low-power mode 11
7.2.7 Dual-boost PFC 11
7.2.8 Overcurrent protection (PFCSENSE pin) 12
7.2.9 Mains undervoltage lockout/brownout protection (VINSENSE pin) 12
7.2.10 Overvoltage protection (VOSENSE pin) 12
7.2.11 PFC open-loop protection (VOSENSE pin) . . 12
7.2.12 Driver (PFCDRIVER pin) 12
7.3 Flyback controller 13
7.3.1 Multimode operation 13
7.3.2 Valley switching (HV pin) 14
7.3.3 Current mode control (FBSENSE pin) 15
7.3.4 Demagnetization (FBAUX pin) 16
7.3.5 Flyback control/time-out (FBCTRL pin) 16
7.3.6 Soft-start (FBSENSE pin) 17
7.3.7 Maximum on-time 18
7.3.8 Overvoltage protection (FBAUX pin) 18
7.3.9 Overcurrent protection (FBSENSE pin) 19
7.3.10 Overpower protection 19
7.3.11 Driver (FBDRIVER pin) 20
8 Limiting values 20
9 Thermal characteristics 21
10 Characteristics 21
11 Application information 26
12 Package outline 27
13 Revision history 28
14 Legal information 29
14.1 Data sheet status 29
14.2 Definitions 29
14.3 Disclaimers 29
14.4 Trademarks 30
15 Contact information 30
16 Contents 31

Please be aware that important notices concerning this document and the product(s) described herein, have been included in section 'Legal information'.

© NXP B.V. 2013. **All rights reserved.**

For more information, please visit: http://www.nxp.com
For sales office addresses, please send an email to: salesaddresses@nxp.com

Date of release: 9 January 2013
Document identifier: TEA1751LT

ENTEGRECİ

Bu belge www.entegreci.com üzerinden sunulmaktadır.

Elektronik komponent tedarikinde Entegreci

Entegreci, Eskişehir merkezli, Türkiye geneline satış yapan bir elektronik komponent mağazasıdır. Entegreler (IC), mikrodenetleyiciler, transistörler, diyotlar, pasif elemanlar, konnektörler, modüller ve geliştirme kartları tek adetten seri üretim adetlerine kadar satılır. Ürün sayfalarında güncel stok durumunu, fiyatı ve datasheet bağlantısını bulabilirsiniz.

Parça koduyla arama

Üretici parça numarasını yazın; stok ve fiyatı hemen görün.

www.entegreci.com

Ürün kategorileri

Entegreden kapasitöre tüm elektronik komponent kategorileri.

Kategorilere göz atın

Üreticiler

Aradığınız üreticinin ürünlerini tek sayfada inceleyin.

Üreticileri görün

Toplu alım ve teklif

Listede olmayan ya da yüksek adetli parçalar için teklif isteyin.

Teklif isteyin

www.entegreci.com | **destek@entegreci.com** | **0850 305 90 34**

Entegreci is an online electronic components store based in Türkiye. Search by manufacturer part number to see stock, prices and datasheets for integrated circuits, microcontrollers, transistors, passive components and connectors, or request a quote for parts that are not listed.

Bu sayfa Entegreci tarafından eklenmiştir. Belgenin önceki sayfaları asıl yayıncısına aittir ve içeriği değiştirilmemiştir; en güncel sürüm için belgenin yayıncısına başvurun.