UMW STD10NF10L

100V N-Channel MOSFET

1.Description

The STD10NF10L uses advanced trench technology to provide excellent $R_{DS(ON)}$, low gate charge andoperation with gate voltages as low as 4.5V. This device is suitable for use as a Battery protection or in other Switching application.

2.1Features

- $V_{DS\ (V)}$=100V
- I_D=15A(V_{GS}=10V)
- $R_{DS(ON)}$<95mΩ(V_{GS}=10V)
- $R_{DS(ON)}$<100mΩ(V_{GS}=4.5V)

2.2Features

- Low Total Gate Charge
- Low Reverse Transfer Capacitance
- Improved dv/dt Capability
- Fast Switching Speed

3.Application

- Uninterruptible Power Supply(UPS)
- Inverter System

4.Pinning information

Pin	Symbol	Description
1	G	GATE
2	D	DRAIN
3	S	SOURCE

TO-252(DPAK)
top view

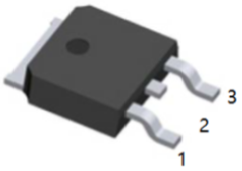

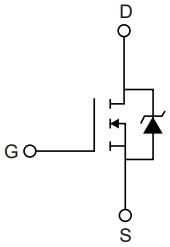

5.Absolute Maximum Ratings T_A= 25°C

Parameter		Symbol	Rating	Units
Drain-Source Voltage		V_{DS}	100	V
Gate-Source Voltage		V_{GS}	±20	
Drain Current-Continuous	T_C=25°C	I_D	15	A
	T_C=100°C		10	
Drain Current-Pulsed[Note2]		I_{DM}	60	
Maximum Power Dissipation	T_C=25°C	P_D	55	W
Storage Temperature Range		T_{STG}	-55 to 175	°C
Junction Temperature Range		T_J	-55 to 175	°C

6.Thermal Resistance Rating

Parameter	Symbol	Typ	Max	Units
Thermal Resistance,Junction-to-Case	R_{thJC}		2.72	°C/W

7.Specifications (T_J= 25°C, unless otherwise noted)

Parameter	Symbol	Conditions	Min	Typ	Max	Units
OFF CHARACTERISTICS						
Drain-Source Breakdown Voltage	BV_{DSS}	V_{GS}=0V, I_{DS}=250μA	100			V
Zero Gate Voltage Drain Current	I_{DSS}	V_{DS}=100V, V_{GS}=0V			1	μA
Gate-Body Leakage	I_{GSS}	V_{GS}=±20V, V_{DS}=0V			±100	nA
ON CHARACTERISTIC						
Gate Threshold Voltage	$V_{GS(th)}$	V_{DS}=V_{GS}, I_{DS}=250μA	1	1.6	3	V
Drain-Source On-State Resistance	$R_{DS(ON)}$	V_{GS}=10V, I_{DS}=10A		95	110	mΩ
		V_{GS}=4.5V, I_{DS}=5A		100	130	mΩ
Forward Transconductance	g_{FS}	V_{DS}=5V, I_{DS}=4A	2			S
DYNAMIC CHARACTERISTICS						
Input Capacitance	C_{iss}	V_{DS}=50V, V_{GS}=0V, f=1MHz		632		pF
Output Capacitance	C_{oss}			37		pF
Reverse Transfer Capacitance	C_{rss}			21		pF
SWITCHING CHARACTERISTICS						
Turn-On Delay Time	$t_{D(on)}$	V_{GS}=10V, V_{DS}=50V, R_L=2.8Ω, R_{GEN}=6Ω, I_D=10A		12.6		ns
Rise Time	t_r			6		ns
Turn-Off Delay Time	$t_{D(off)}$			32.5		ns
Fall Time	t_f			4.3		ns
Total Gate Charge at 10V	Q_g	V_{DS}=80V, I_{DS}=10A, V_{GS}=10V		19.2		nC
Gate to Source Gate Charge	Q_{gs}			3.4		nC
Gate to Drain“Miller”Charge	Q_{gd}			6.1		nC

DRAIN-SOURCE DIODE CHARACTERISTICS AND MAXIMUM RATINGS						
Drain-Source Diode Forward Voltage	V_{SD}	V_{GS}=0V, I_{DS}=10A			1.2	V

Notes:

1.The maximum current rating is package limited.

2.Repetitive Rating: Pulse width limited by maximum junction temperature.

3.E_{AS} condition: T_J=25°C,V_{DD}=50V,V_G=10V, R_G=25Ω.

8.1 Typical Characteristic

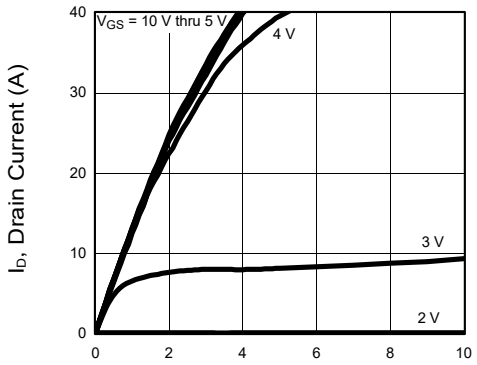

Figure 1: Output Characteristics

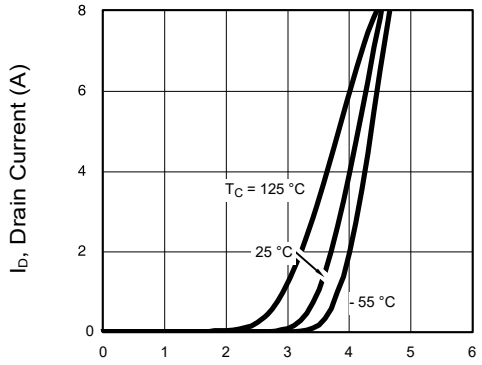

Figure 2:Transfer Characteristics

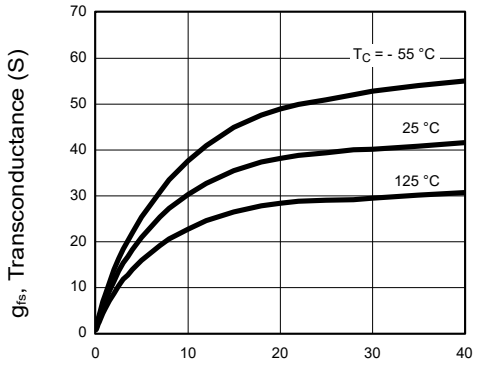

Figure 3: Transconductance

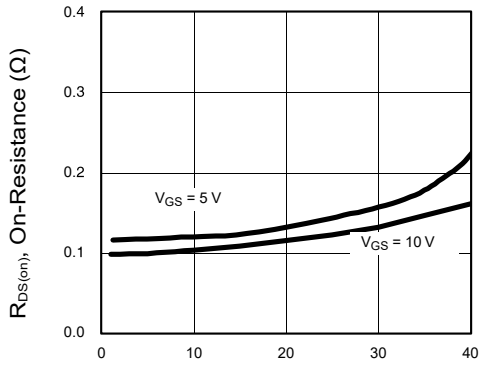

Figure 4: On-Resistance vs. Drain Current

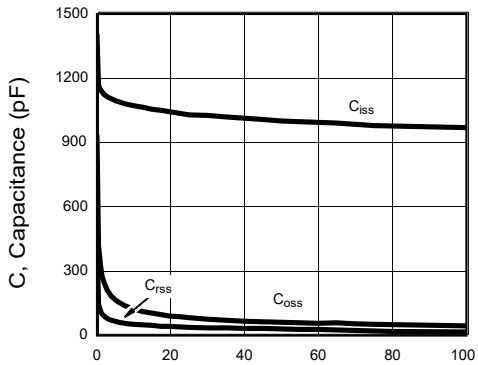

Figure 5: Capacitance

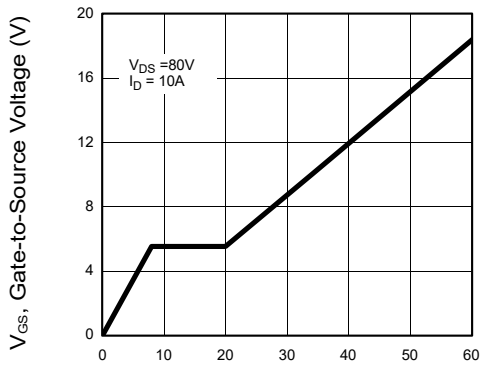

Figure 6: Gate Charge

8.2 Typical Characteristic

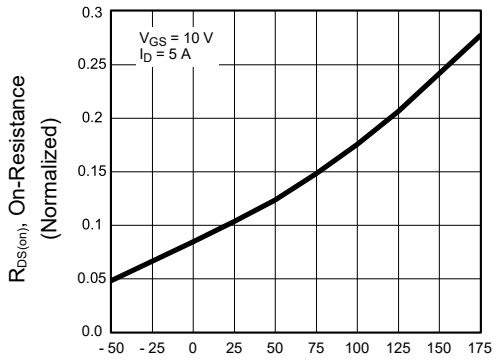

Figure 7: On-Resistancevs. Junction Temperature

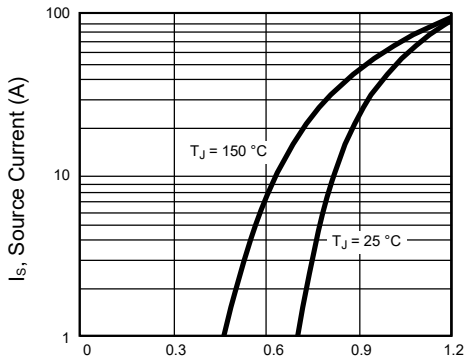

Figure 8: Source-Drain Diode Forward Voltage

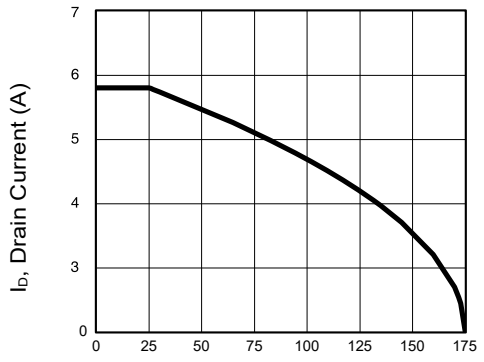

Figure 9: Maximum Avalanche Drain Current vs. Case Temperature

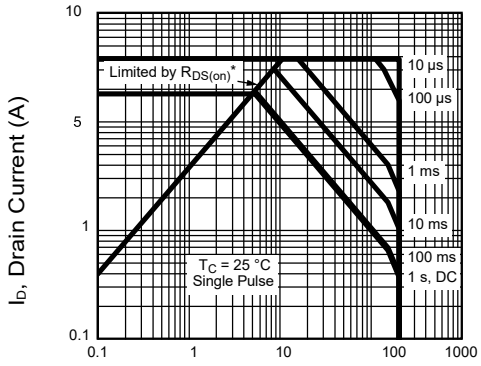

Figure 10: Safe Operating Area

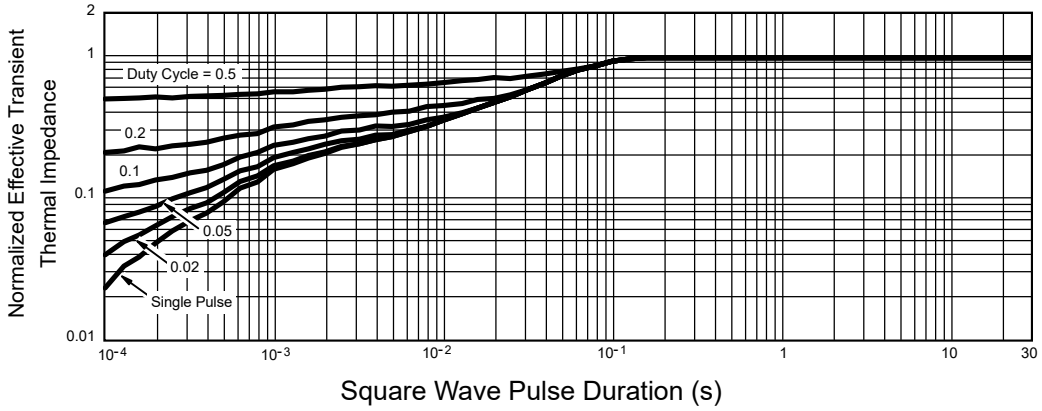

Figure 11: Normalized Thermal Transient Impedance, Junction-to-Case

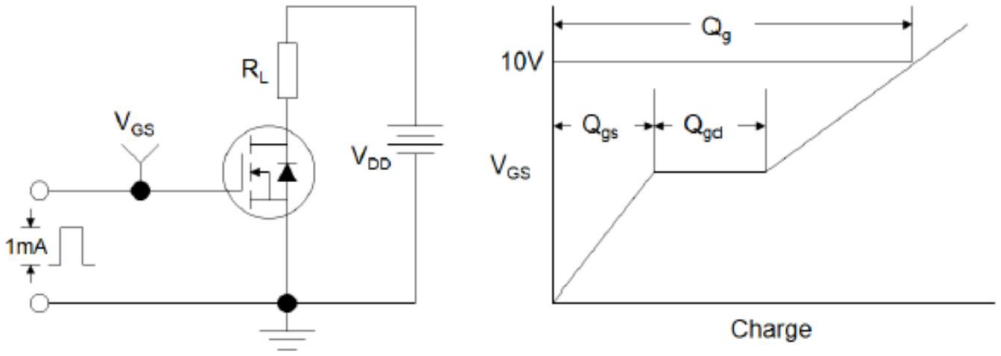

Figure1:Gate Charge Test Circuit & Waveform

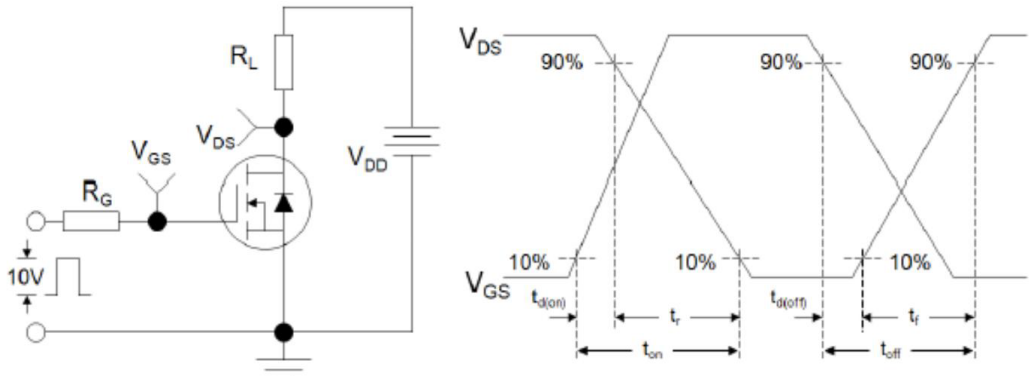

Figure 2: Resistive Switching Test Circuit & Waveforms

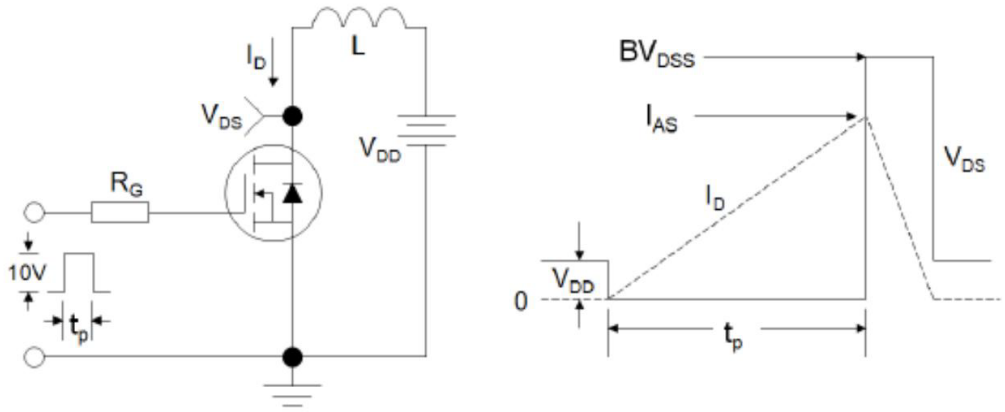

Figure 3:Unclamped inductive Switching Test Circuit & Waveforms

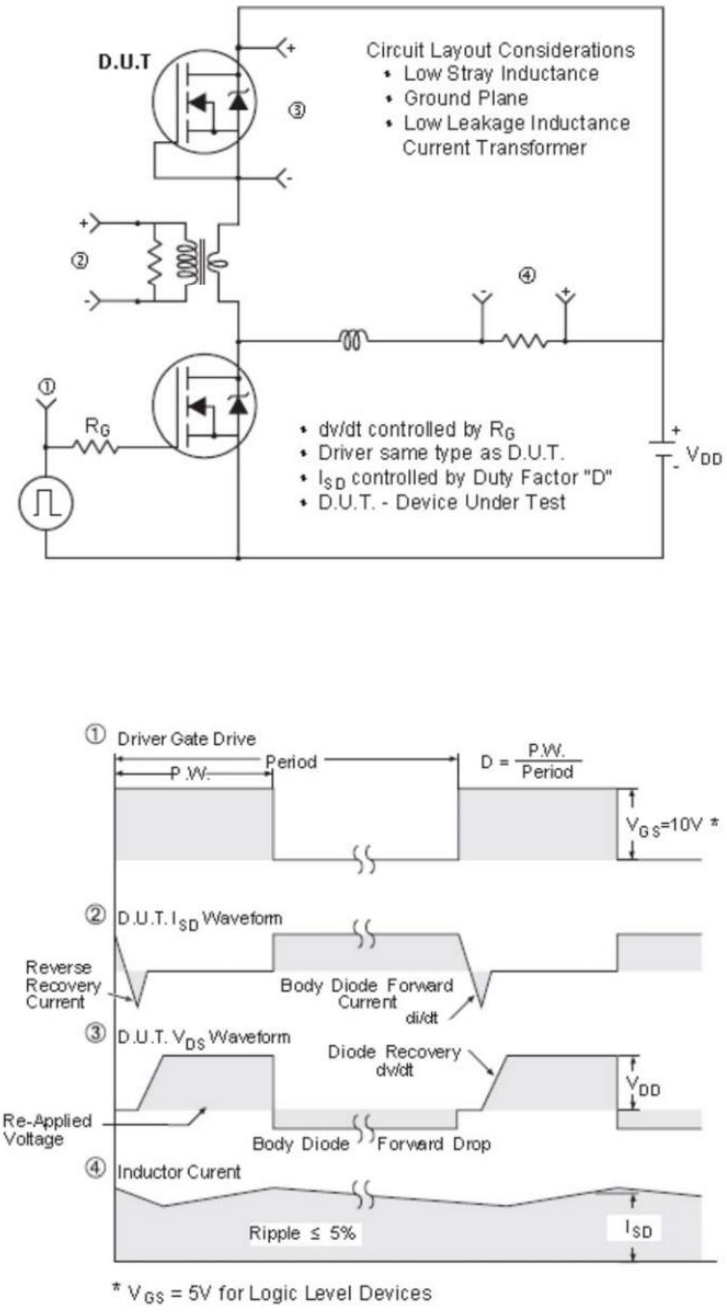

Figure 4: Peak Diode Recovery dvldt Test Circuit & Waveforms (For N-channel)

9.TO-252 Package Outline Dimensions

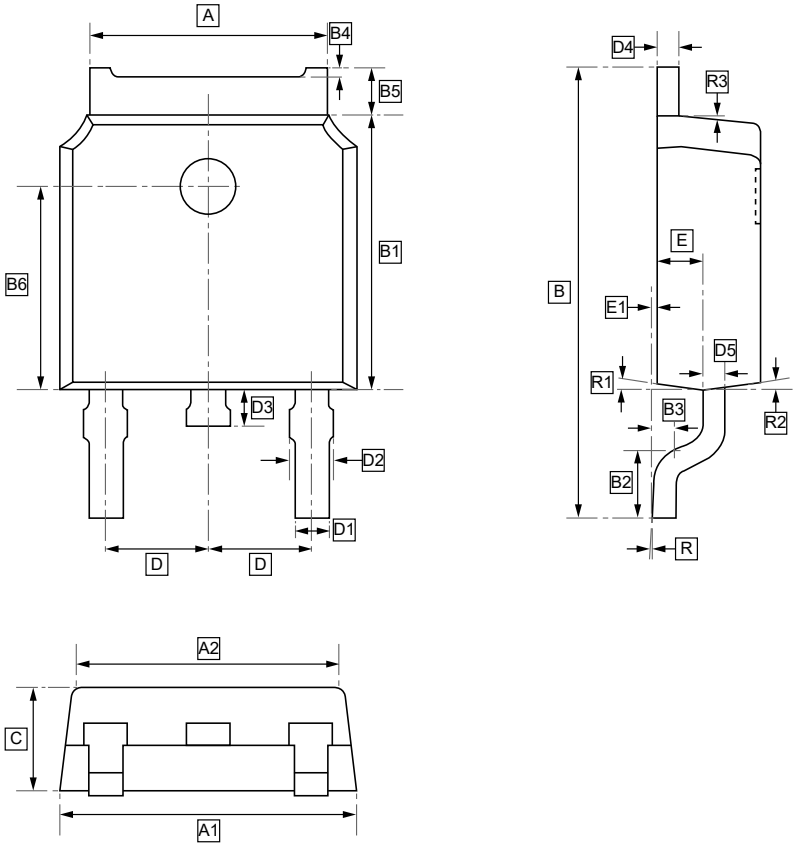

DIMENSIONS (mm are the original dimensions)

Symbol	A	A1	A2	B	B1	B2	B3	B4	B5	B6	C	D
Min	5.1	6.4	5.6	9.5	5.9	1.35	0.4	0.1	0.85	4.35	2.15	2.286
Max	5.5	6.8	6.0	10.3	6.3	1.65	0.6	(typ.)	1.05	4.65	2.45	(typ.)

Symbol	D1	D2	D3	D4	D5	E	E1	R	R1	R2	R3
Min	0.66	0.81	0.65	0.42	0.42	0.86	0.05	0°	7°	7°	7°
Max	0.86	1.01	0.95	0.58	0.58	1.16	0.05	6°	(typ.)	(typ.)	(typ.)

10.Ordering information

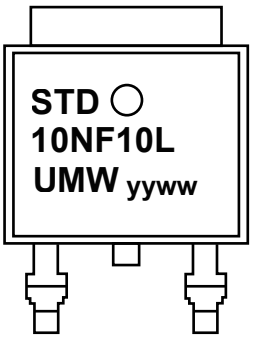

yy: Year Code
ww: Week Code

Order Code	Package	Base QTY	Delivery Mode
UMW STD10NF10L	TO-252	2500	Tape and reel

11.Disclaimer

UMW reserves the right to make changes to all products, specifications. Customers should obtain the latest version of product documentation and verify the completeness and currency of the information before placing an order.

When applying our products, please do not exceed the maximum rated values, as this may affect the reliability of the entire system. Under certain conditions, any semiconductor product may experience faults or failures. Buyers are responsible for adhering to safety standards and implementing safety measures during system design, prototyping, and manufacturing when using our products to prevent potential failure risks that could lead to personal injury or property damage.

Unless explicitly stated in writing, UMW products are not intended for use in medical, life-saving, or life-sustaining applications, nor for any other applications where product failure could result in personal injury or death. If customers use or sell the product for such applications without explicit authorization, they assume all associated risks.

When reselling, applying, or exporting, please comply with export control laws and regulations of China, the United States, the United Kingdom, the European Union, and other relevant countries, regions, and international organizations.

This document and any actions by UMW do not grant any intellectual property rights, whether express or implied, by estoppel or otherwise. The product names and marks mentioned herein may be trademarks of their respective owners.

ENTEGRECİ

Bu belge www.entegreci.com üzerinden sunulmaktadır.

Elektronik komponent tedarikinde Entegreci

Entegreci, Eskişehir merkezli, Türkiye geneline satış yapan bir elektronik komponent mağazasıdır. Entegreler (IC), mikrodenetleyiciler, transistörler, diyotlar, pasif elemanlar, konnektörler, modüller ve geliştirme kartları tek adetten seri üretim adetlerine kadar satılır. Ürün sayfalarında güncel stok durumunu, fiyatı ve datasheet bağlantısını bulabilirsiniz.

Parça koduyla arama

Üretici parça numarasını yazın; stok ve fiyatı hemen görün.

www.entegreci.com

Ürün kategorileri

Entegreden kapasitöre tüm elektronik komponent kategorileri.

Kategorilere göz atın

Üreticiler

Aradığınız üreticinin ürünlerini tek sayfada inceleyin.

Üreticileri görün

Toplu alım ve teklif

Listede olmayan ya da yüksek adetli parçalar için teklif isteyin.

Teklif isteyin

www.entegreci.com | **destek@entegreci.com** | **0850 305 90 34**

Entegreci is an online electronic components store based in Türkiye. Search by manufacturer part number to see stock, prices and datasheets for integrated circuits, microcontrollers, transistors, passive components and connectors, or request a quote for parts that are not listed.

Bu sayfa Entegreci tarafından eklenmiştir. Belgenin önceki sayfaları asıl yayıncısına aittir ve içeriği değiştirilmemiştir; en güncel sürüm için belgenin yayıncısına başvurun.