MOSFETs Silicon N-Channel MOS

SSM3K329R

1. Applications

- Power Management Switches
- High-Speed Switching

2. Features

(1) 1.8-V gate drive voltage.

(2) Low drain-source on-resistance

: RDS(ON) = 289 mΩ (max) ($@V_{GS}$ = 1.8 V)

RDS(ON) = 170 mΩ (max) ($@V_{GS}$ = 2.5 V)

RDS(ON) = 126 mΩ (max) ($@V_{GS}$ = 4.0 V)

3. Packaging and Internal Circuit

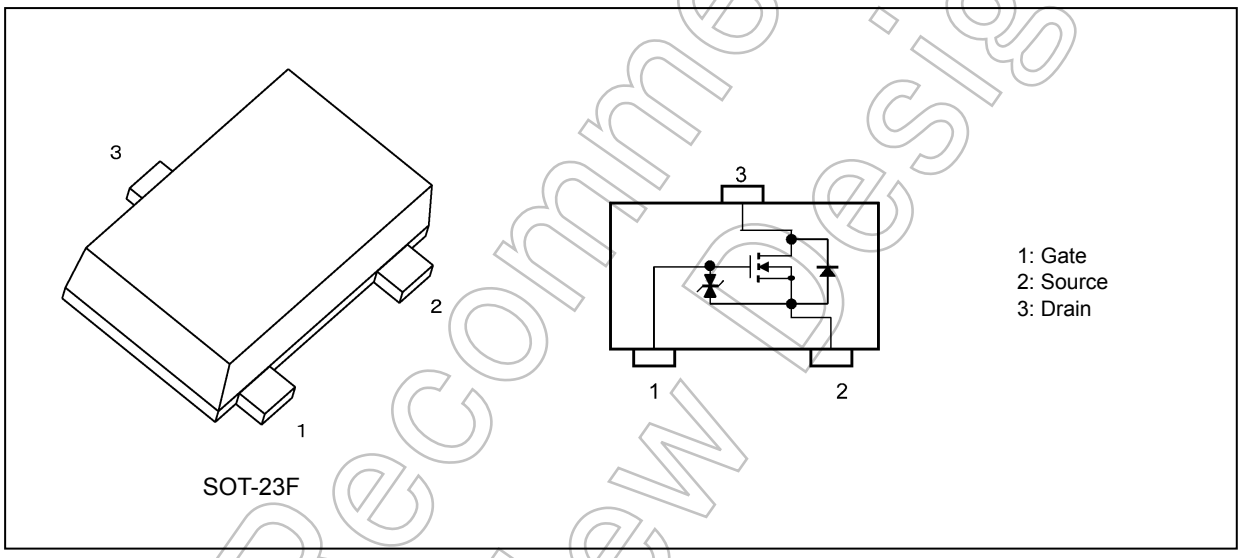

Not Recommended for New Design

Start of commercial production
2010-02

©2021
Toshiba Electronic Devices & Storage Corporation

4. Absolute Maximum Ratings (Note) (Unless otherwise specified, T_a = 25 °C)

Characteristics			Symbol	Rating	Unit
Drain-source voltage			V_{DSS}	30	V
Gate-source voltage			V_{GSS}	±12	V
Drain current (DC)		(Note 1)	I_D	3.5	A
Drain current (pulsed)		(Note 1), (Note 2)	I_{DP}	7.0	
Power dissipation		(Note 3)	P_D	1	W
Power dissipation	(t = 10 s)	(Note 3)		2	
Channel temperature			T_{ch}	150	°C
Storage temperature			T_{stg}	-55 to 150	°C

Note: Using continuously under heavy loads (e.g. the application of high temperature/current/voltage and the significant change in temperature, etc.) may cause this product to decrease in the reliability significantly even if the operating conditions (i.e. operating temperature/current/voltage, etc.) are within the absolute maximum ratings.
Please design the appropriate reliability upon reviewing the Toshiba Semiconductor Reliability Handbook ("Handling Precautions"/"Derating Concept and Methods") and individual reliability data (i.e. reliability test report and estimated failure rate, etc).

Note 1: Ensure that the channel temperature does not exceed 150 °C.

Note 2: Pulse width (PW) ≤ 10 ms, duty ≤ 1%

Note 3: Device mounted on an FR4 board. (25.4 mm × 25.4 mm × 1.6 mm ,Cu pad: 645 mm^2)

Note: The MOSFETs in this device are sensitive to electrostatic discharge. When handling this device, the worktables, operators, soldering irons and other objects should be protected against anti-static discharge.

Note: The channel-to-ambient thermal resistance, $R_{th(ch-a)}$, and the drain power dissipation, P_D, vary according to the board material, board area, board thickness and pad area. When using this device, be sure to take heat dissipation fully into account.

Not Recommended for New Design

©2021
Toshiba Electronic Devices & Storage Corporation

5. Electrical Characteristics

5.1. Static Characteristics (Unless otherwise specified, T_a = 25 °C)

Characteristics		Symbol	Test Condition	Min	Typ.	Max	Unit
Gate leakage current		I_{GSS}	V_{DS} = 0 V, V_{GS} = ±12 V	—	—	±1	μA
Drain cut-off current		I_{DSS}	V_{DS} = 30 V, V_{GS} = 0 V	—	—	1	μA
Drain-source breakdown voltage		$V_{(BR)DSS}$	I_D = 1 mA, V_{GS} = 0 V	30	—	—	V
Drain-source breakdown voltage	(Note 1)	$V_{(BR)DSX}$	I_D = 1 mA, V_{GS} = -12 V	18	—	—	
Gate threshold voltage	(Note 2)	V_{th}	V_{DS} = 3 V, I_D = 1 mA	0.4	—	1.0	V
Drain-source on-resistance	(Note 3)	$R_{DS(ON)}$	I_D = 1.0 A, V_{GS} = 4.0 V	—	96	126	mΩ
			I_D = 0.8 A, V_{GS} = 2.5 V	—	118	170	
			I_D = 0.5 A, V_{GS} = 1.8 V	—	158	289	
Forward transfer admittance	(Note 3)	$\|Y_{fs}\|$	V_{DS} = 3 V, I_D = 1.0 A	2.1	4.2	—	S

Note 1: If a reverse bias is applied between gate and source, this device enters $V_{(BR)DSX}$ mode. Note that the drain-source breakdown voltage is lowered in this mode.

Note 2: Let V_{th} be the voltage applied between gate and source that causes the drain current (I_D) to below (1 mA for this device). Then, for normal switching operation, $V_{GS(ON)}$ must be higher than V_{th}, and $V_{GS(OFF)}$ must be lower than V_{th}. This relationship can be expressed as: $V_{GS(OFF)} < V_{th} < V_{GS(ON)}$.
Take this into consideration when using the device.

Note 3: Pulse measurement.

5.2. Dynamic Characteristics (Unless otherwise specified, T_a = 25 °C)

Characteristics	Symbol	Test Condition	Min	Typ.	Max	Unit
Input capacitance	C_{iss}	V_{DS} = 15 V, V_{GS} = 0 V, f = 1 MHz	—	123	—	pF
Reverse transfer capacitance	C_{rss}		—	18	—	
Output capacitance	C_{oss}		—	43	—	
Switching time (turn-on time)	t_{on}	V_{DD} = 15 V , I_D = 1.0 A, V_{GS} = 0 to 2.5 V, R_G = 4.7 Ω Duty ≤ 1%, Input: t_r, t_f < 5 ns Common source	—	9.2	—	ns
Switching time (turn-off time)	t_{off}		—	6.4	—	

5.3. Switching Time Test Circuit

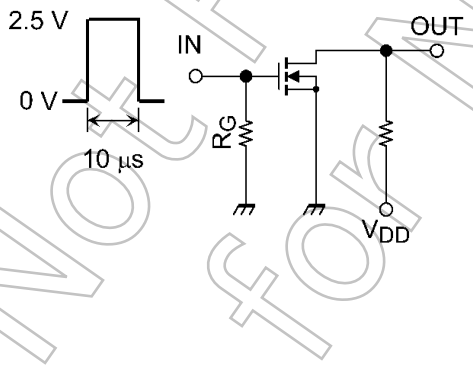

Fig. 5.3.1 Switching Time Test Circuit

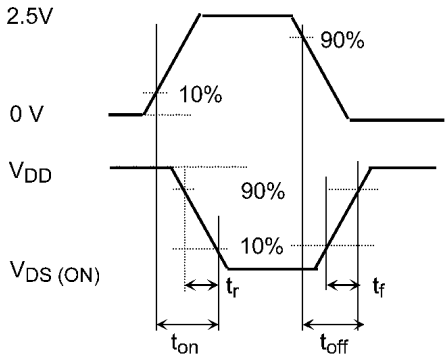

Fig. 5.3.2 Input Waveform/Output Waveform

5.4. Gate Charge Characteristics (Unless otherwise specified, T_a = 25 °C)

Characteristics	Symbol	Test Condition	Min	Typ.	Max	Unit
Total gate charge (gate-source plus gate-drain)	Q_g	V_{DS} = 15 V, I_D = 2.0 A, V_{GS} = 4 V	—	1.5	—	nC
Gate-source charge 1	Q_{gs1}		—	0.3	—	
Gate-drain charge	Q_{gd}		—	0.6	—	

Not Recommended for New Design

5.5. Source-Drain Characteristics (Unless otherwise specified, T_a = 25 °C)

Characteristics	Symbol	Test Condition	Min	Typ.	Max	Unit
Diode forward voltage (Note 1)	V_{DSF}	I_D = -3.5 A, V_{GS} = 0 V	—	-0.9	-1.2	V

Note 1: Pulse measurement.

6. Marking

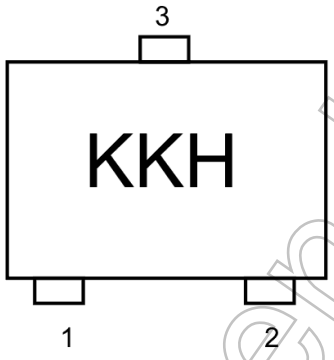

Fig. 6.1 Marking

Not Recommended for New Design

7. Characteristics Curves (Note)

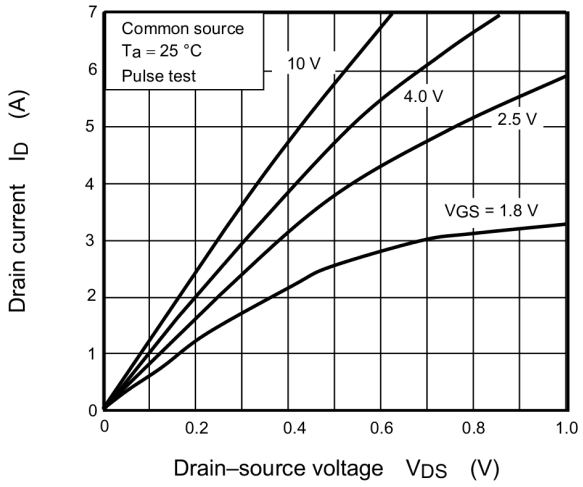

Fig. 7.1 I_D - V_{DS}

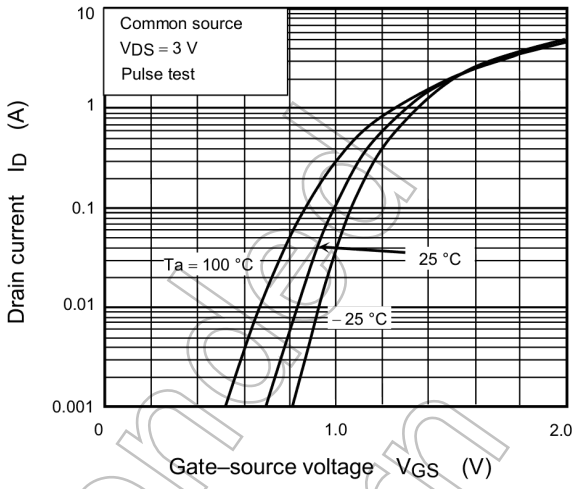

Fig. 7.2 I_D - V_{GS}

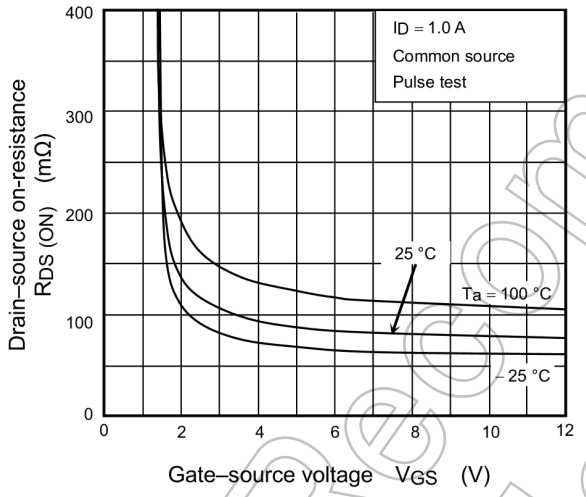

Fig. 7.3 $R_{DS(ON)}$ - V_{GS}

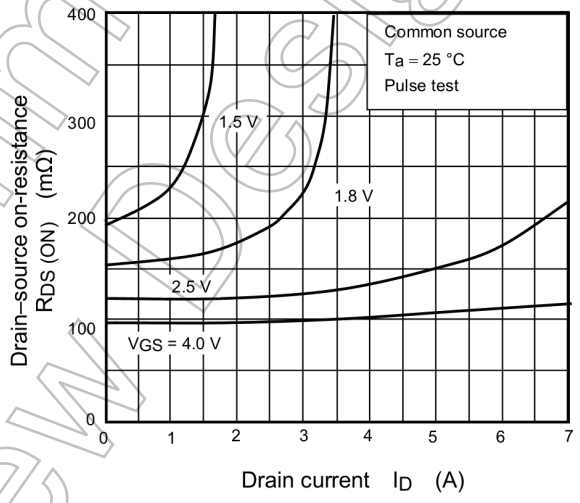

Fig. 7.4 $R_{DS(ON)}$ - I_D

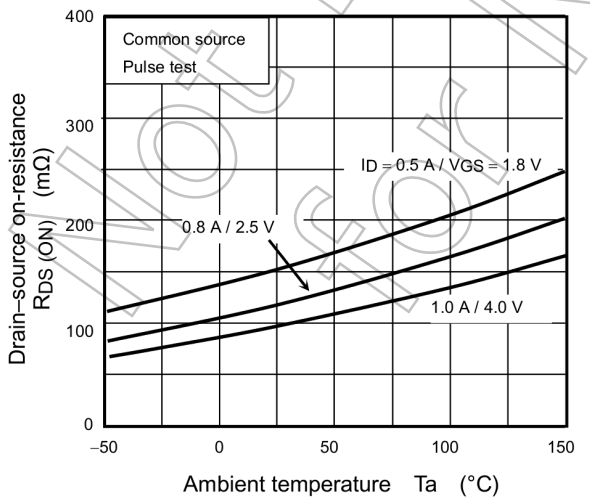

Fig. 7.5 $R_{DS(ON)}$ - T_a

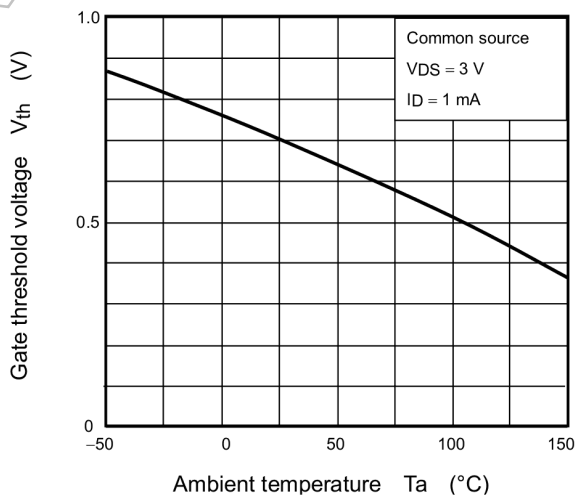

Fig. 7.6 V_{th} - T_a

Not Recommended for New Design

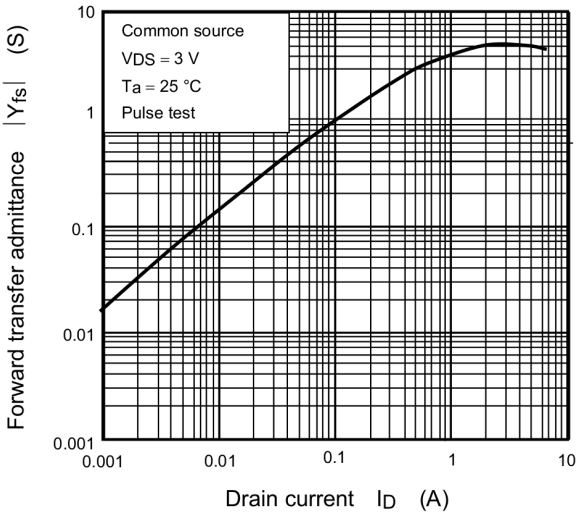

Fig. 7.7 $|Y_{fs}|$ - I_D

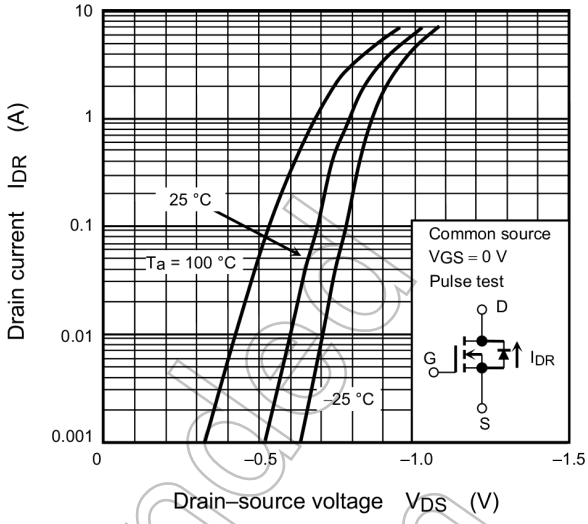

Fig. 7.8 I_{DR} - V_{DS}

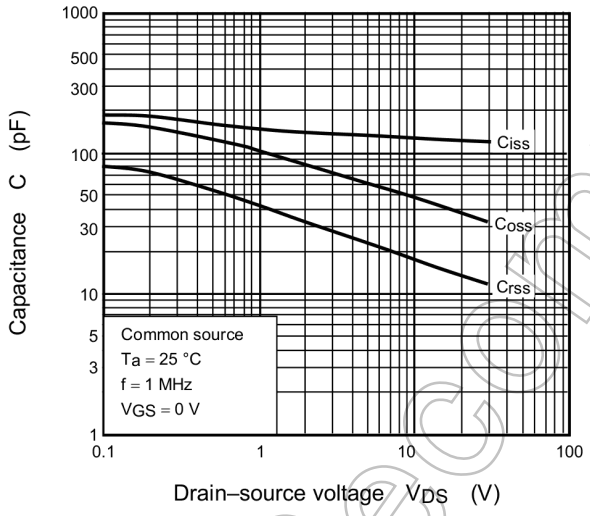

Fig. 7.9 C - V_{DS}

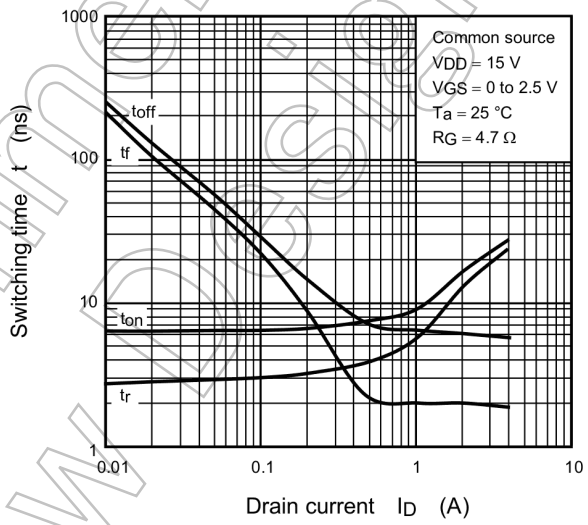

Fig. 7.10 t - I_D

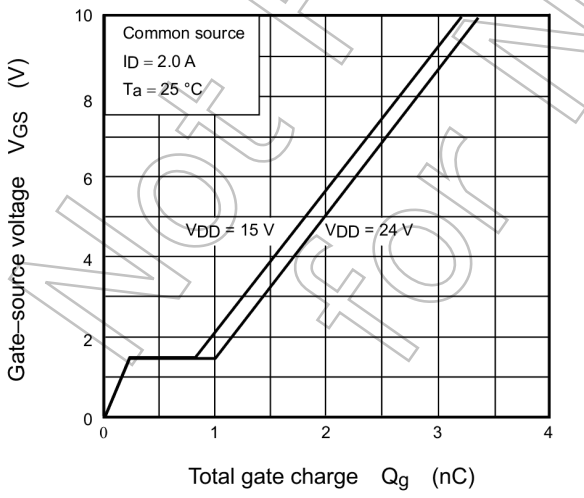

Fig. 7.11 Dynamic Input Characteristics

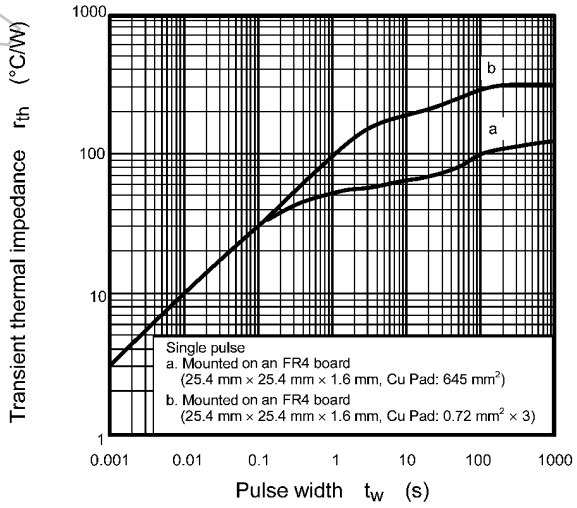

Fig. 7.12 r_{th} - t_w

Not Recommended for New Design

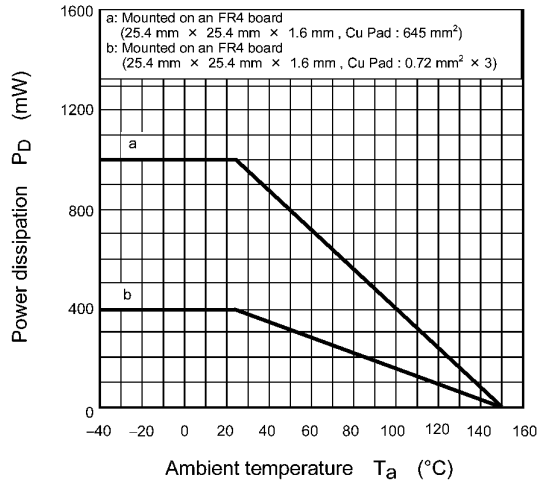

Fig. 7.13 P_D - T_a

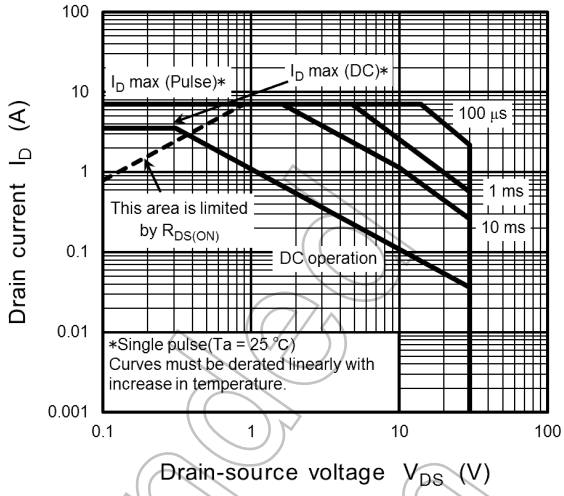

Fig. 7.14 Safe Operating Area

Note: The above characteristics curves are presented for reference only and not guaranteed by production test, unless otherwise noted.

Not Recommended for New Design

Package Dimensions

Unit: mm

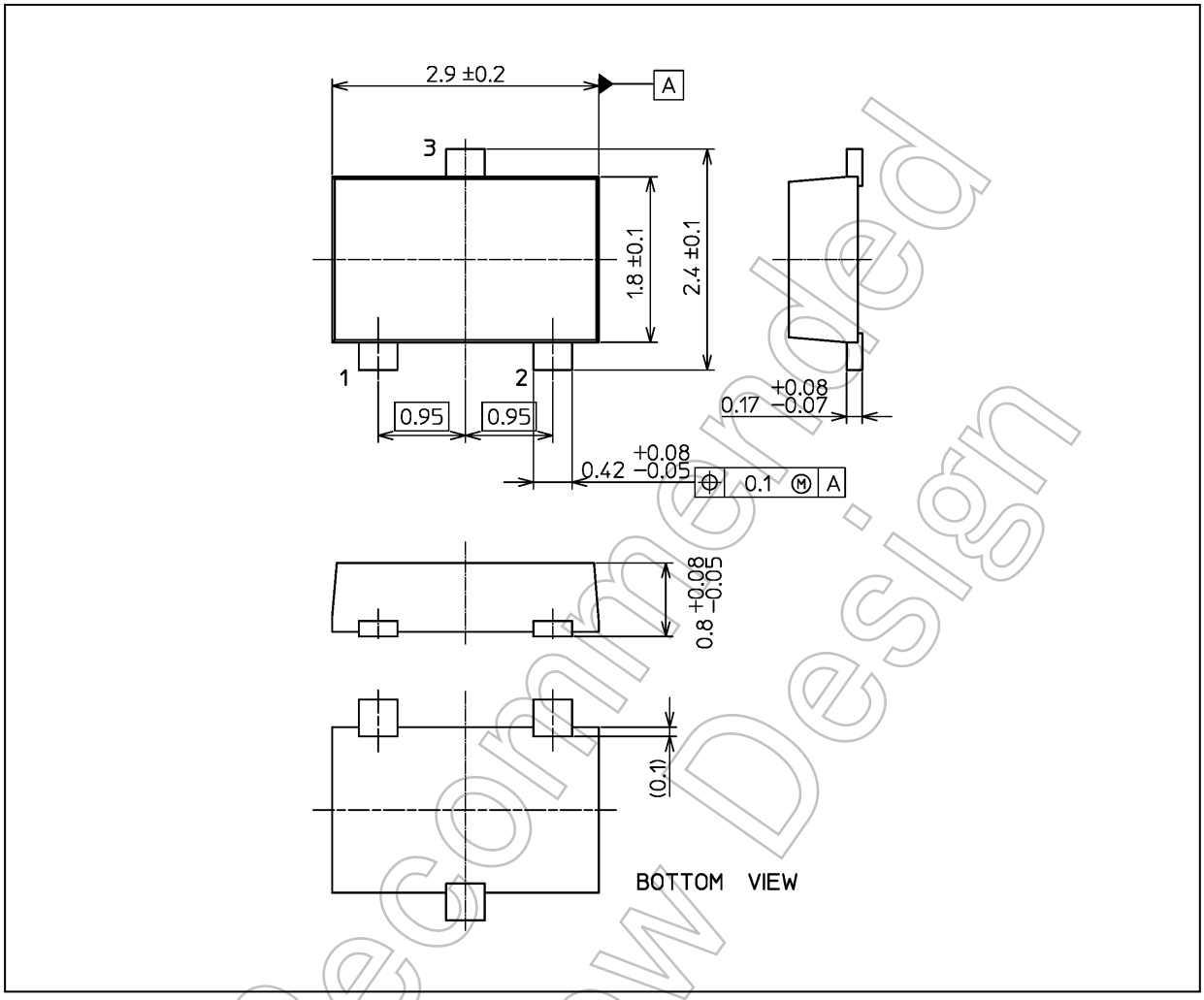

Weight: 0.011 g (typ.)

Package Name(s)
Nickname: SOT-23F

Not Recommended for New Design

RESTRICTIONS ON PRODUCT USE

Toshiba Corporation and its subsidiaries and affiliates are collectively referred to as "TOSHIBA".
Hardware, software and systems described in this document are collectively referred to as "Product".

- TOSHIBA reserves the right to make changes to the information in this document and related Product without notice.
- This document and any information herein may not be reproduced without prior written permission from TOSHIBA. Even with TOSHIBA's written permission, reproduction is permissible only if reproduction is without alteration/omission.
- Though TOSHIBA works continually to improve Product's quality and reliability, Product can malfunction or fail. Customers are responsible for complying with safety standards and for providing adequate designs and safeguards for their hardware, software and systems which minimize risk and avoid situations in which a malfunction or failure of Product could cause loss of human life, bodily injury or damage to property, including data loss or corruption. Before customers use the Product, create designs including the Product, or incorporate the Product into their own applications, customers must also refer to and comply with (a) the latest versions of all relevant TOSHIBA information, including without limitation, this document, the specifications, the data sheets and application notes for Product and the precautions and conditions set forth in the "TOSHIBA Semiconductor Reliability Handbook" and (b) the instructions for the application with which the Product will be used with or for. Customers are solely responsible for all aspects of their own product design or applications, including but not limited to (a) determining the appropriateness of the use of this Product in such design or applications; (b) evaluating and determining the applicability of any information contained in this document, or in charts, diagrams, programs, algorithms, sample application circuits, or any other referenced documents; and (c) validating all operating parameters for such designs and applications. **TOSHIBA ASSUMES NO LIABILITY FOR CUSTOMERS' PRODUCT DESIGN OR APPLICATIONS.**
- PRODUCT IS NEITHER INTENDED NOR WARRANTED FOR USE IN EQUIPMENTS OR SYSTEMS THAT REQUIRE EXTRAORDINARILY HIGH LEVELS OF QUALITY AND/OR RELIABILITY, AND/OR A MALFUNCTION OR FAILURE OF WHICH MAY CAUSE LOSS OF HUMAN LIFE, BODILY INJURY, SERIOUS PROPERTY DAMAGE AND/OR SERIOUS PUBLIC IMPACT ("UNINTENDED USE").
  Except for specific applications as expressly stated in this document, Unintended Use includes, without limitation, equipment used in nuclear facilities, equipment used in the aerospace industry, lifesaving and/or life supporting medical equipment, equipment used for automobiles, trains, ships and other transportation, traffic signaling equipment, equipment used to control combustions or explosions, safety devices, elevators and escalators, and devices related to power plant.
  IF YOU USE PRODUCT FOR UNINTENDED USE, TOSHIBA ASSUMES NO LIABILITY FOR PRODUCT.
  For details, please contact your TOSHIBA sales representative or contact us via our website.
- Do not disassemble, analyze, reverse-engineer, alter, modify, translate or copy Product, whether in whole or in part.
- Product shall not be used for or incorporated into any products or systems whose manufacture, use, or sale is prohibited under any applicable laws or regulations.
- The information contained herein is presented only as guidance for Product use. No responsibility is assumed by TOSHIBA for any infringement of patents or any other intellectual property rights of third parties that may result from the use of Product. No license to any intellectual property right is granted by this document, whether express or implied, by estoppel or otherwise.
- **ABSENT A WRITTEN SIGNED AGREEMENT, EXCEPT AS PROVIDED IN THE RELEVANT TERMS AND CONDITIONS OF SALE FOR PRODUCT, AND TO THE MAXIMUM EXTENT ALLOWABLE BY LAW, TOSHIBA (1) ASSUMES NO LIABILITY WHATSOEVER, INCLUDING WITHOUT LIMITATION, INDIRECT, CONSEQUENTIAL, SPECIAL, OR INCIDENTAL DAMAGES OR LOSS, INCLUDING WITHOUT LIMITATION, LOSS OF PROFITS, LOSS OF OPPORTUNITIES, BUSINESS INTERRUPTION AND LOSS OF DATA, AND (2) DISCLAIMS ANY AND ALL EXPRESS OR IMPLIED WARRANTIES AND CONDITIONS RELATED TO SALE, USE OF PRODUCT, OR INFORMATION, INCLUDING WARRANTIES OR CONDITIONS OF MERCHANTABILITY, FITNESS FOR A PARTICULAR PURPOSE, ACCURACY OF INFORMATION, OR NONINFRINGEMENT.**
- Do not use or otherwise make available Product or related software or technology for any military purposes, including without limitation, for the design, development, use, stockpiling or manufacturing of nuclear, chemical, or biological weapons or missile technology products (mass destruction weapons). Product and related software and technology may be controlled under the applicable export laws and regulations including, without limitation, the Japanese Foreign Exchange and Foreign Trade Law and the U.S. Export Administration Regulations. Export and re-export of Product or related software or technology are strictly prohibited except in compliance with all applicable export laws and regulations.
- Please contact your TOSHIBA sales representative for details as to environmental matters such as the RoHS compatibility of Product. Please use Product in compliance with all applicable laws and regulations that regulate the inclusion or use of controlled substances, including without limitation, the EU RoHS Directive. **TOSHIBA ASSUMES NO LIABILITY FOR DAMAGES OR LOSSES OCCURRING AS A RESULT OF NONCOMPLIANCE WITH APPLICABLE LAWS AND REGULATIONS.**

Not Recommended for New Design

©2021
Toshiba Electronic Devices & Storage Corporation

ENTEGRECİ

Bu belge www.entegreci.com üzerinden sunulmaktadır.

Elektronik komponent tedarikinde Entegreci

Entegreci, Eskişehir merkezli, Türkiye geneline satış yapan bir elektronik komponent mağazasıdır. Entegreler (IC), mikrodenetleyiciler, transistörler, diyotlar, pasif elemanlar, konnektörler, modüller ve geliştirme kartları tek adetten seri üretim adetlerine kadar satılır. Ürün sayfalarında güncel stok durumunu, fiyatı ve datasheet bağlantısını bulabilirsiniz.

Parça koduyla arama

Üretici parça numarasını yazın; stok ve fiyatı hemen görün.

www.entegreci.com

Ürün kategorileri

Entegreden kapasitöre tüm elektronik komponent kategorileri.

Kategorilere göz atın

Üreticiler

Aradığınız üreticinin ürünlerini tek sayfada inceleyin.

Üreticileri görün

Toplu alım ve teklif

Listede olmayan ya da yüksek adetli parçalar için teklif isteyin.

Teklif isteyin

www.entegreci.com | **destek@entegreci.com** | **0850 305 90 34**

Entegreci is an online electronic components store based in Türkiye. Search by manufacturer part number to see stock, prices and datasheets for integrated circuits, microcontrollers, transistors, passive components and connectors, or request a quote for parts that are not listed.

Bu sayfa Entegreci tarafından eklenmiştir. Belgenin önceki sayfaları asıl yayıncısına aittir ve içeriği değiştirilmemiştir; en güncel sürüm için belgenin yayıncısına başvurun.