SL7N65

N-CHANNEL MOSFET

主要参数 MAIN CHARACTERISTICS

I_D	7A
V_{DSS}	650V
$R_{DS(ON)}$（V_{GS}=10V）	1.4Ω
Q_G	30nC

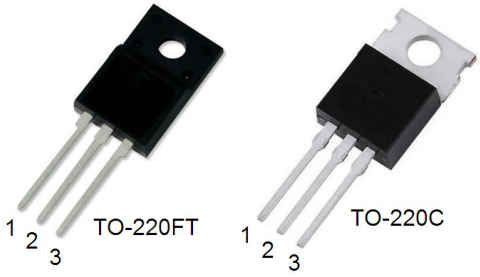

用途

- 高频开关电源
- 电子整流器
- LED 电源

APPLICATIONS

- High efficiency switch mode power supplies
- Electronic lamp ballasts based on half bridge
- LED power supplies

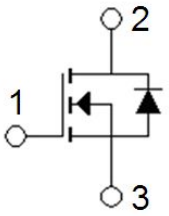

产品特性

- 低栅极电荷
- 低 C_{RSS} (典型值 16pF)
- 开关速度快
- 100%雪崩测试
- 高抗 dv/dt 能力
- RoHS 产品

FEATURES

- Low gate charge
- Low C_{RSS}(typical 16pF)
- Fast switching
- 100% avalanche tested
- Improved dv/dt capability
- RoHS product

1 Gate
2 Drain
3 Source

订货信息 ORDER MESSAGE

订货型号 Order codes	印记 Marking	封装 Package	无卤素 Halogen Free	包装 Packaging	器件重量 Device Weight
SL7N65F	SL7N65F	TO-220FT	否 NO	条管 Tube	2.2g(typ)
SL7N65C	SL7N65C	TO-220C	否 NO	条管 Tube	2.15g(typ)

绝对值 ABSOLUTE RATINGS (T_C=25℃,unless otherwise specified)

项目 Parameter		符号 Symbol	数值 Ratings		单位 Unit
			TO-220FT	TO-220C	
漏极－源极击穿电压 Drain-Source Breakdown Voltage		V_{DSS}	650		V
漏极连续电流 Continuous Drain Current	T_C=25℃	I_D	7*		A
	T_C=100°℃		4.4*		A
漏极脉冲电流（注 1） Drain Current pulsed（note 1）		I_{DM}	28*		A
最高栅源电压 Gate-Source Voltage		V_{GSS}	±30		V
单脉冲雪崩能量（注 2） Single Pulsed Avalanche Energy（note 2）		E_{AS}	429		mJ
重复雪崩能量（注 1） Repetitive Avalanche Current （note 1）		E_{AR}	41		mJ
二极管反向恢复最大电压变化速率（注 3） Peak Diode Recovery dv/dt （note 3）		dv/dt	5		V/ns
耗散功率 Total Power Dissipation	T_C=25℃	P_D	27.9	147	W
	Derate above 25℃		0.22	1.18	W/℃
最高结温 Operating Junction Temperature		T_J	150		℃
存储温度 Storage Temperature		T_{STG}	-55～+150		℃
焊接温度 Maximum Temperature for Soldering Leads		T_L	300		℃

* 漏极电流由最高结温限制。

* Drain current is limited by junction temperature.

电特性 ELECTRICAL CHARACTERISTICS（T_J=25℃,unless otherwise specified）

项目 Parameter		符号 Symbol	测试条件 Test conditions	最小值 Min	典型值 Typ	最大值 Max	单位 Unit
断态特性 Off Characteristics							
漏－源击穿电压 Drain-Source Breakdown Voltage		BV_{DSS}	I_D=250μA, V_{GS}=0V	650	-	-	V
击穿电压温度特性 Breakdown Voltage Temperature Coefficient		$\Delta BV_{DSS}/\Delta T_J$	I_D=250μA, referenced to 25℃	-	0.51	-	V/℃
漏源极漏电流 Drain-Source leakage Current		I_{DSS}	V_{DS}=650V,V_{GS}=0V	-	-	1	μA
			V_{DS}=520V,T_C=125℃	-	-	50	μA
栅源极漏电流 Gate-Source leakage current	正向 Forward	I_{GSS}	V_{DS}=0V,V_{GS}=30V	-	-	100	nA
	反向 Reverse		V_{DS}=0V,V_{GS}=-30V	-	-	-100	nA

项目 Parameter	符号 Symbol	测试条件 Test conditions	最小值 Min	典型值 Typ	最大值 Max	单位 Unit
通态特性 On Characteristics						
阈值电压 Gate Threshold Voltage	$V_{GS(th)}$	V_{DS}=V_{GS}，I_D=250μA	2.5	-	4.5	V
静态导通电阻 Static Drain-Source On-Resistance	$R_{DS(ON)}$	V_{GS}=10V,I_D=3.5A	-	1.1	1.4	Ω
正向跨导 Forward Transconductance	g_{FS}	V_{DS}=30V,I_D=3.5A (note 4)	-	5.5	-	S
动态特性 Dynamic Characteristics						
输入电容 Input capacitance	C_{ISS}	V_{DS}=25V,V_{GS}=0V, f=1MHz	-	950	-	pF
输出电容 Output capacitance	C_{OSS}		-	108	-	
反向传输电容 Reverse transfer capacitance	C_{RSS}		-	16	-	
开关特性 Switching Characteristics						
导通延迟时间 Turn on delay time	$t_{d(ON)}$	V_{DD}=325V,I_D=7A, R_G=25Ω （note 4，5）	-	16	-	ns
上升时间 Rise time	t_r		-	36	-	
关断延迟时间 Turn off delay time	$t_{d(off)}$		-	83	-	
下降时间 Fall time	t_f		-	40	-	
栅极电荷总量 Total Gate Charge	Q_G	V_{DS}=520V,I_D=7A, V_{GS}=10V （note 4，5）	-	30	-	nC
栅－源电荷 Gate-Source charge	Q_{GS}		-	5	-	
栅－漏电荷 Gate-Drain charge	Q_{GD}		-	15	-	
源-漏二极管特性 Source-Drain Diode Characteristics						
正向连续电流 Continuous Forward Current	I_S		-	-	7	A
正向脉冲电流 Pulsed Forward Current	I_{SM}		-	-	28	A
正向压降 Forward Voltage	V_{SD}	V_{GS}=0V,I_S=7A	-	-	1.4	V
反向恢复时间 Reverse recovery time	t_{rr}	V_{GS}=0V,I_S=7A, dI_F/dt=100A/μs (note 4)	-	436	-	ns
反向恢复电荷 Reverse recovery charge	Q_{rr}		-	8.7	-	μC

热特性 THERMAL CHARACTERISTICS

项目 Parameter	符号 Symbol	最大值 Max		单位 Unit
		TO-220FT	TO-220C	
结到管壳的热阻 Thermal Resistance,Junction to Case	$R_{th(j-c)}$	4.47	0.85	℃/W
结到环境的热阻 Thermal Resistance,Junction to Ambient	$R_{th(j-a)}$	49.5	60	℃/W

注:

1:脉冲宽度由最高结温限制

2:L=17.5mH, I_{AS}=7A, V_{DD}=50V, R_G=25Ω,起始结温 T_J=25℃

3:I_{SD}≤7A,di/dt ≤100A/μs,V_{DD}≤BV_{DSS},起始结温 T_J=25℃

4:脉冲测试:脉冲宽度≤300μs,占空比≤2%

5:基本与工作温度无关

Notes:

1:Pulse width limited by maximum junction temperature

2:L=17.5mH, I_{AS}=7A, V_{DD}=50V, R_G=25 Ω,Starting T_J=25℃

3:I_{SD} ≤7A,di/dt ≤100A/μs,V_{DD}≤BV_{DSS}, Starting T_J=25℃

4:Pulse Test:Pulse Width ≤300μs,Duty Cycle≤2%

5:Essentially independent of operating temperature

特征曲线 TYPICAL CHARACTERISTICS (curves)

Fig.1. On-state Characteristics

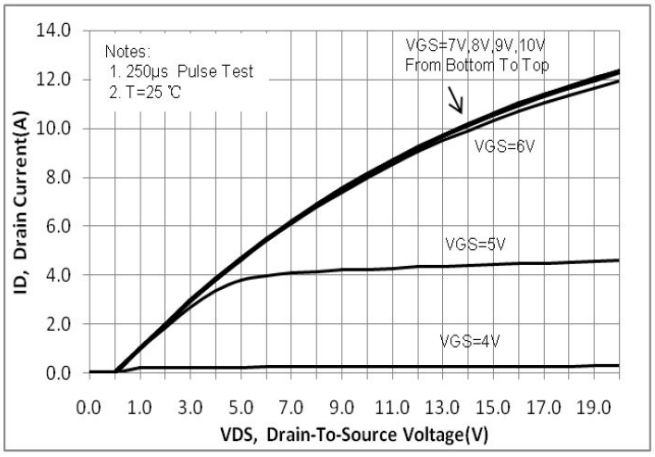

Fig.2. On-resistance variation vs. drain current and gate voltage

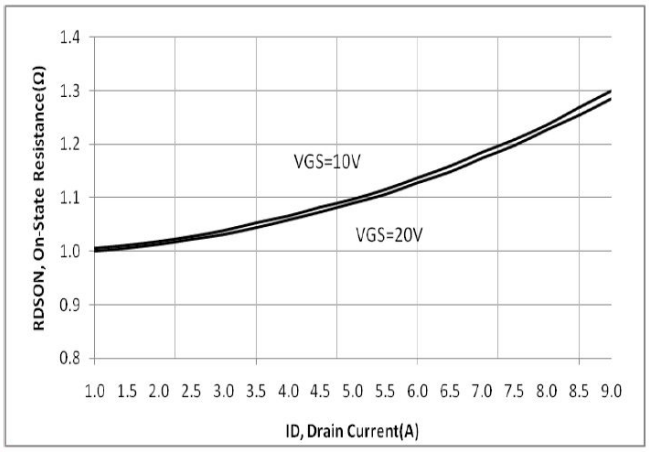

Fig.3. Gate charge characteristics

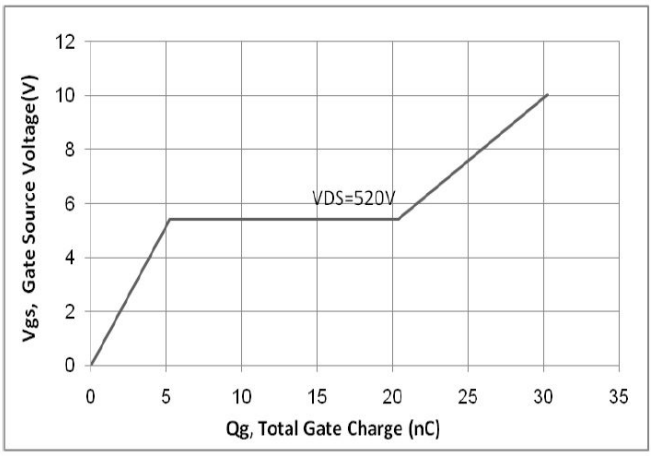

Fig.4. On state current vs. Diode forward voltage

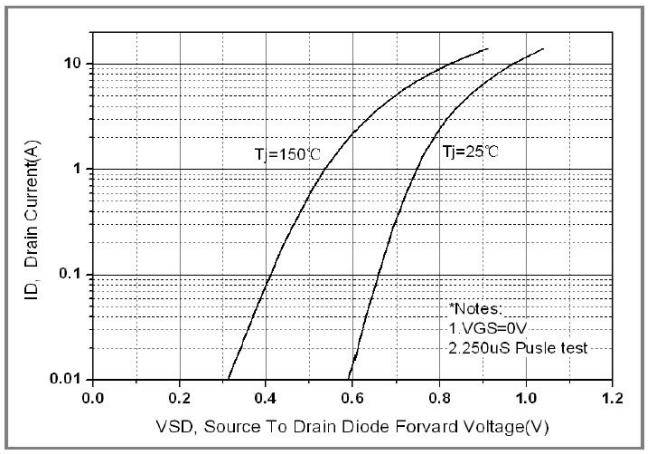

Fig.5. Breakdown voltage variation vs. Junction temperation

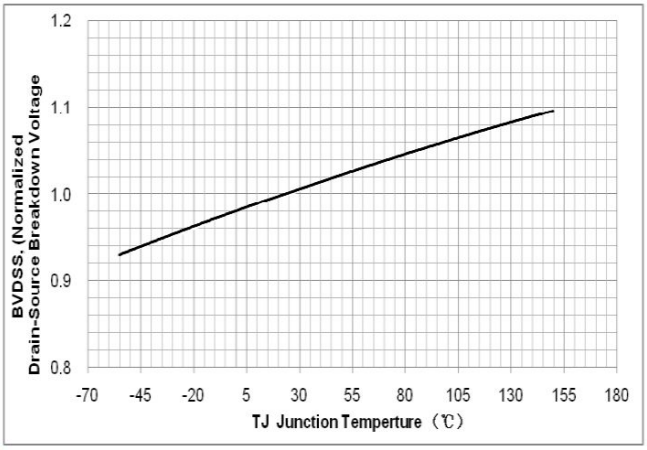

Fig.6. On resistance variation vs. Junction temperature

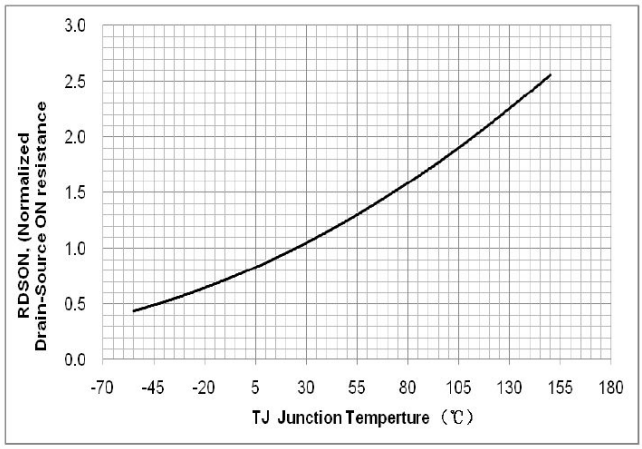

Fig.7. Maximum safe operating area

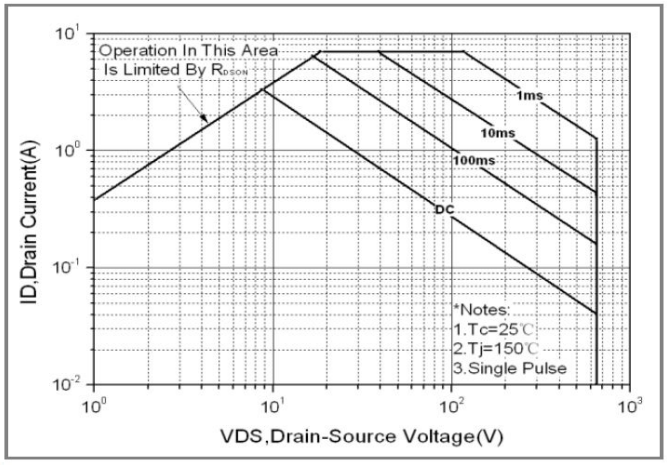

Fig.8. Transient thermal response curve

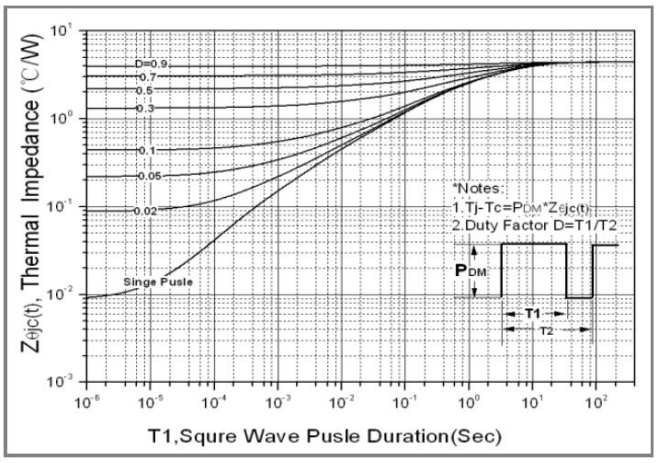

Fig.9. Capacitance characteristics

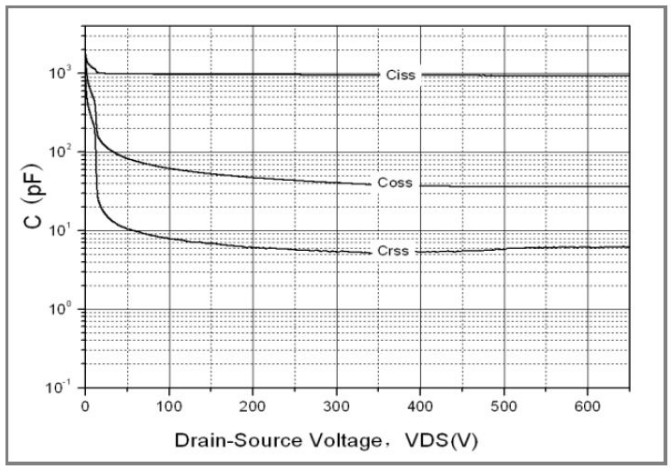

Fig.10. Gate charge test circuit & waveform

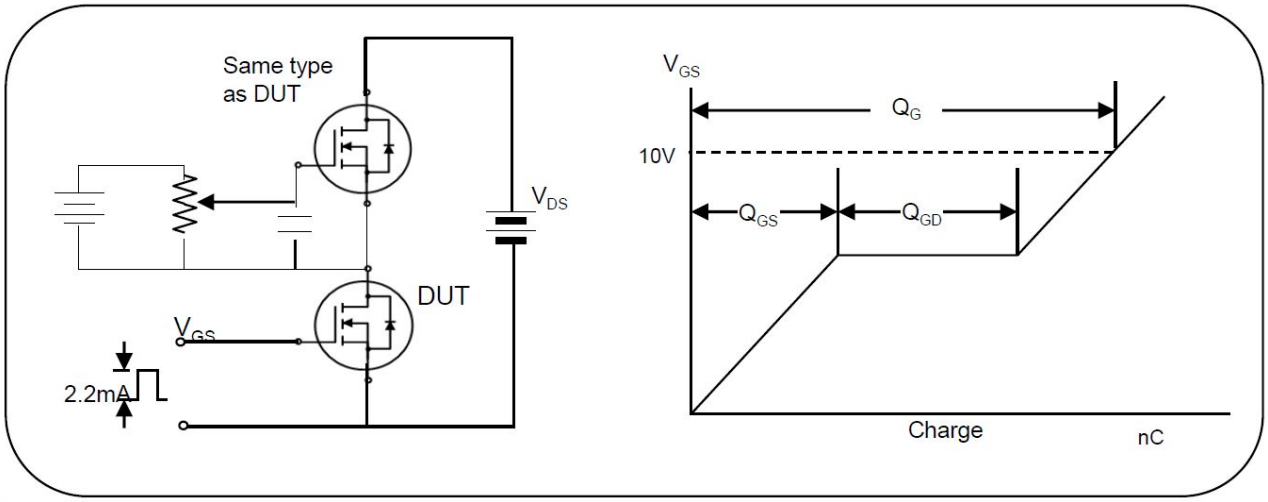

Fig.11. Switching time test circuit & waveform

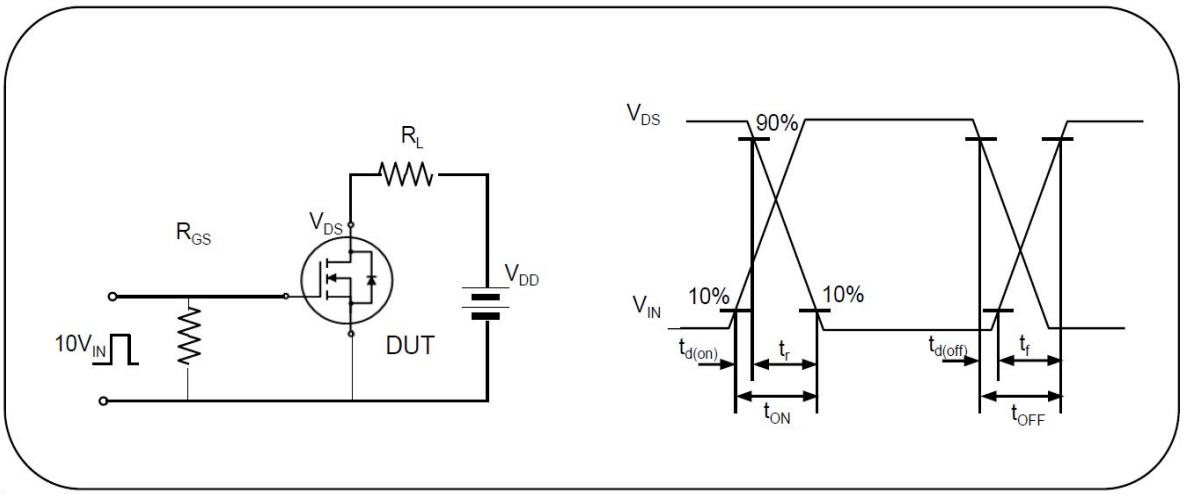

Fig.12. Unclamped inductive switching test circuit & waveform

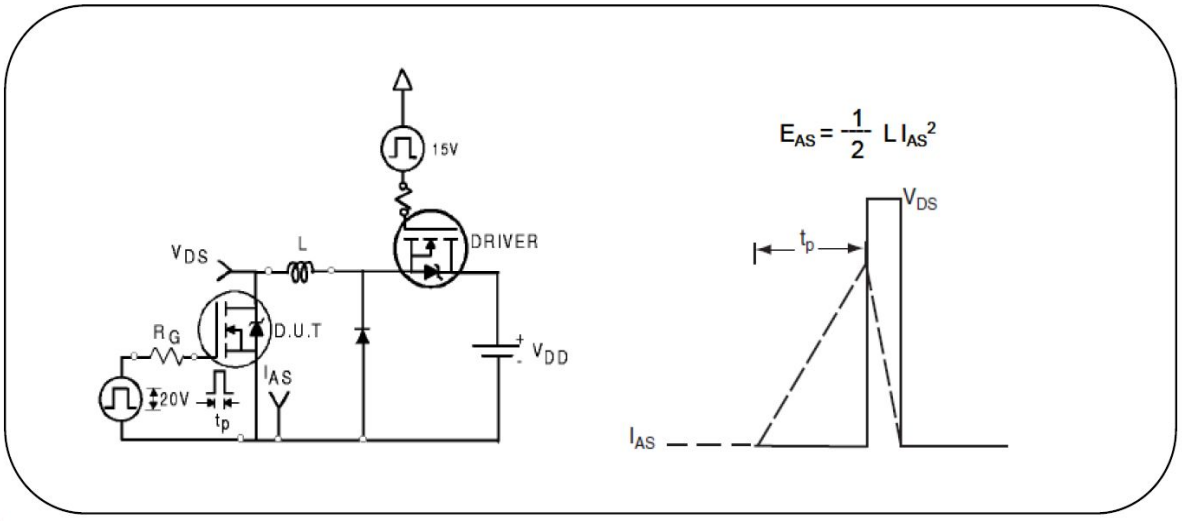

Fig.13. Peak diode recovery dv/dt test circuit & waveform

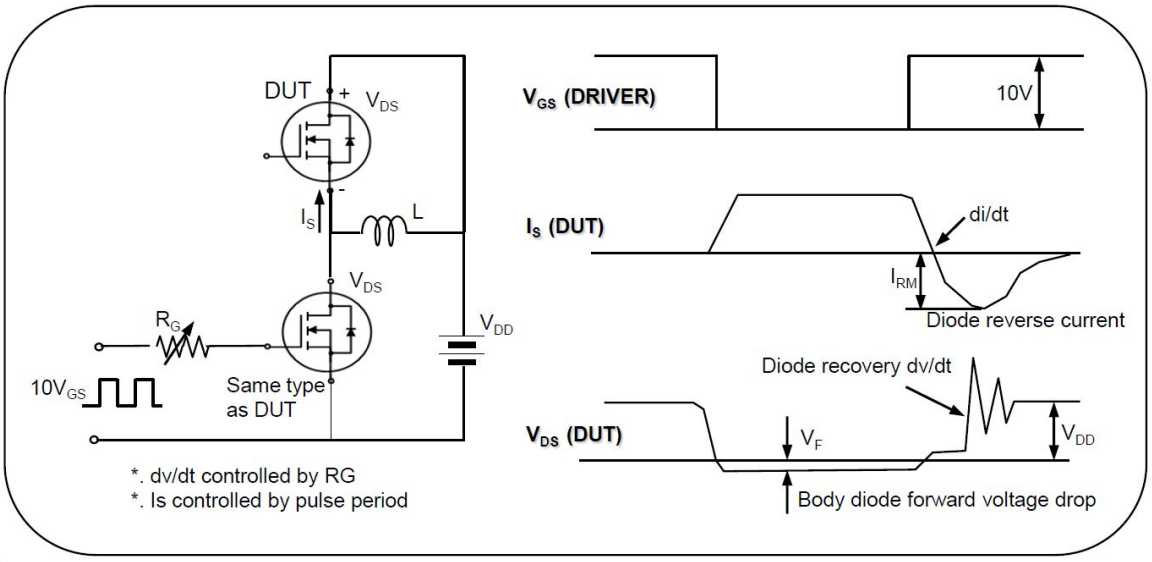

外形尺寸 PACKAGE MECHANICAL DATA

TO-220FT

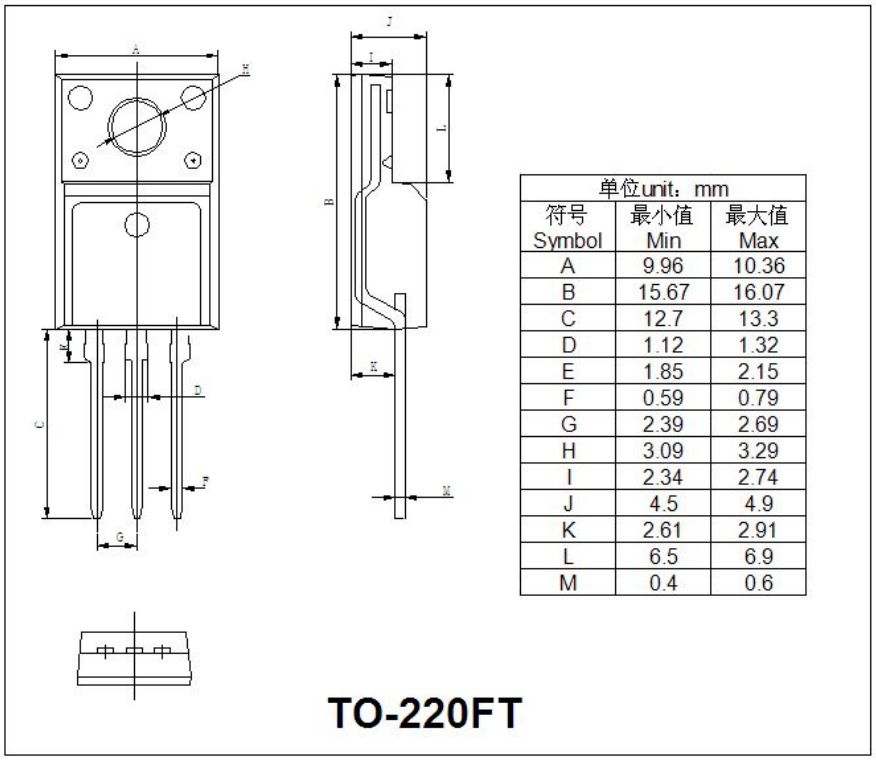

单位unit：mm		
符号 Symbol	最小值 Min	最大值 Max
A	9.96	10.36
B	15.67	16.07
C	12.7	13.3
D	1.12	1.32
E	1.85	2.15
F	0.59	0.79
G	2.39	2.69
H	3.09	3.29
I	2.34	2.74
J	4.5	4.9
K	2.61	2.91
L	6.5	6.9
M	0.4	0.6

TO-220C

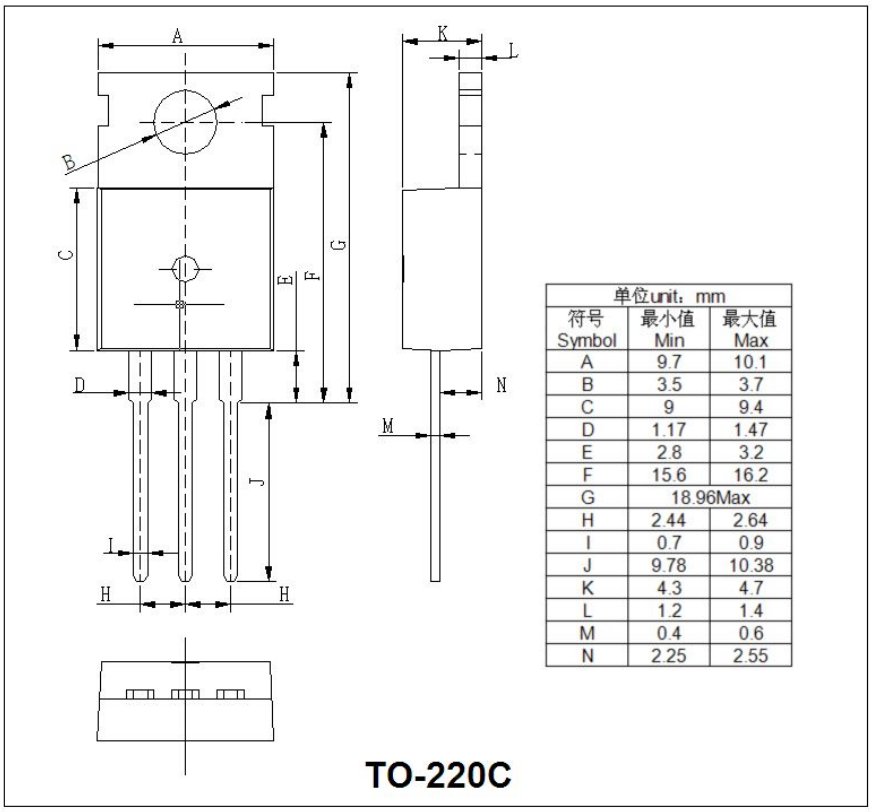

单位unit：mm		
符号 Symbol	最小值 Min	最大值 Max
A	9.7	10.1
B	3.5	3.7
C	9	9.4
D	1.17	1.47
E	2.8	3.2
F	15.6	16.2
G	18.96Max	
H	2.44	2.64
I	0.7	0.9
J	9.78	10.38
K	4.3	4.7
L	1.2	1.4
M	0.4	0.6
N	2.25	2.55

ENTEGRECİ

Bu belge www.entegreci.com üzerinden sunulmaktadır.

Elektronik komponent tedarikinde Entegreci

Entegreci, Eskişehir merkezli, Türkiye geneline satış yapan bir elektronik komponent mağazasıdır. Entegreler (IC), mikrodenetleyiciler, transistörler, diyotlar, pasif elemanlar, konnektörler, modüller ve geliştirme kartları tek adetten seri üretim adetlerine kadar satılır. Ürün sayfalarında güncel stok durumunu, fiyatı ve datasheet bağlantısını bulabilirsiniz.

Parça koduyla arama

Üretici parça numarasını yazın; stok ve fiyatı hemen görün.

www.entegreci.com

Ürün kategorileri

Entegreden kapasitöre tüm elektronik komponent kategorileri.

Kategorilere göz atın

Üreticiler

Aradığınız üreticinin ürünlerini tek sayfada inceleyin.

Üreticileri görün

Toplu alım ve teklif

Listede olmayan ya da yüksek adetli parçalar için teklif isteyin.

Teklif isteyin

www.entegreci.com | **destek@entegreci.com** | **0850 305 90 34**

Entegreci is an online electronic components store based in Türkiye. Search by manufacturer part number to see stock, prices and datasheets for integrated circuits, microcontrollers, transistors, passive components and connectors, or request a quote for parts that are not listed.

Bu sayfa Entegreci tarafından eklenmiştir. Belgenin önceki sayfaları asıl yayıncısına aittir ve içeriği değiştirilmemiştir; en güncel sürüm için belgenin yayıncısına başvurun.