N-Channel Enhancement Mode MOSFET

Features

- 40V/60A,
  $R_{DS(ON)}$=7.2mΩ (Typ.) @ V_{GS}=10V
  $R_{DS(ON)}$=9.2mΩ (Typ.) @ V_{GS}=4.5V
- Reliable and Rugged
- Lead Free and Green Devices Available (RoHS Compliant)

Applications

- Power Management in Desktop Computer or DC/DC Converters.

Pin Description

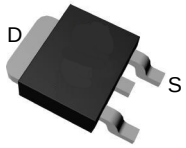

Top View of TO-252-2

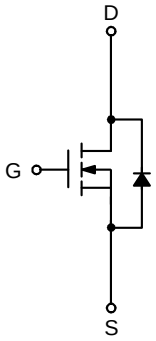

N-Channel MOSFET

Absolute Maximum Ratings

Symbol	Parameter		Rating	Unit
Common Ratings (T_A=25°C Unless Otherwise Noted)				
V_{DSS}	Drain-Source Voltage		40	V
$BV_{DS(Avalanche)}$*	Drain-Source Avalanche Voltage (Maximum)		45	
V_{GSS}	Gate-Source Voltage		±20	
T_J	Maximum Junction Temperature		175	°C
T_{STG}	Storage Temperature Range		-55 to 175	°C
I_S	Diode Continuous Forward Current		40	A
I_{DP}	300μs Pulse Drain Current Tested	T_C=25°C	160	A
		T_C=100°C	90	
I_D	Continuous Drain Current	T_C=25°C	60***	A
		T_C=100°C	48	
P_D	Maximum Power Dissipation	T_C=25°C	60	W
		T_C=100°C	30	
$R_{\theta JC}$	Thermal Resistance-Junction to Case		2.5	°C/W
$R_{\theta JA}$	Thermal Resistance-Junction to Ambient		50	°C/W
E_{AS}**	Drain-Source Avalanche Energy	L=0.5mH	100	mJ

Notes：

* Avalanche single pulse test and avalanche period time tav≦100μs, duty<1% .

** Avalanche test condition: T_J=25°C, L=0.5mH, I_{AS}=20A, V_{DD}=30V, and V_{GS}=10V.

*** Current limited by bond wire.

Electrical Characteristics (Cont.) (T_A = 25°C unless otherwise noted)

Symbol	Parameter	Test Conditions	XP4184			Unit
			Min.	Typ.	Max.	
Static Characteristics						
BV_{DSS}	Drain-Source Breakdown Voltage	V_{GS}=0V, I_{DS}=250μA	40	-	-	V
I_{DSS}	Zero Gate Voltage Drain Current	V_{DS}=32V, V_{GS}=0V	-	-	1	μA
		T_J=85°C	-	-	30	
$V_{GS(th)}$	Gate Threshold Voltage	V_{DS}=V_{GS}, I_{DS}=250μA	1.2	1.6	2	V
I_{GSS}	Gate Leakage Current	V_{GS}=±20V, V_{DS}=0V	-	-	±100	nA
$R_{DS(ON)}$ [a]	Drain-Source On-state Resistance	V_{GS}=10V, I_{DS}=20A	-	7.2	9	mΩ
		V_{GS}=4.5V, I_{DS}=10A	-	9.2	13	
Diode Characteristics						
V_{SD} [a]	Diode Forward Voltage	I_{SD}=20A, V_{GS}=0V	-	0.8	1.1	V
t_{rr}	Reverse Recovery Time	I_{DS}=40A, dI_{SD}/dt=100A/μs	-	28	-	ns
Q_{rr}	Reverse Recovery Charge		-	24	-	nC
Dynamic Characteristics [b]						
R_G	Gate Resistance	V_{GS}=0V,V_{DS}=0V,F=1MHz	-	1.4	-	Ω
C_{iss}	Input Capacitance	V_{GS}=0V, V_{DS}=20V, Frequency=1.0MHz	-	1460	-	pF
C_{oss}	Output Capacitance		-	180	-	
C_{rss}	Reverse Transfer Capacitance		-	146	-	
$t_{d(ON)}$	Turn-on Delay Time	V_{DD}=20V, R_L=20Ω, I_{DS}=1A, V_{GEN}=10V, R_G=6Ω	-	11	21	ns
t_r	Turn-on Rise Time		-	13	24	
$t_{d(OFF)}$	Turn-off Delay Time		-	37	67	
t_f	Turn-off Fall Time		-	11	21	
Gate Charge Characteristics [b]						
Q_g	Total Gate Charge	V_{DS}=20V, V_{GS}=10V, I_{DS}=40A	-	31.2	44	nC
Q_{gs}	Gate-Source Charge		-	3.8	-	
Q_{gd}	Gate-Drain Charge		-	9	-	

Note a : Pulse test ; pulse width≤300μs, duty cycle≤2%.
Note b : Guaranteed by design, not subject to production testing.

Typical Operating Characteristics

Power Dissipation

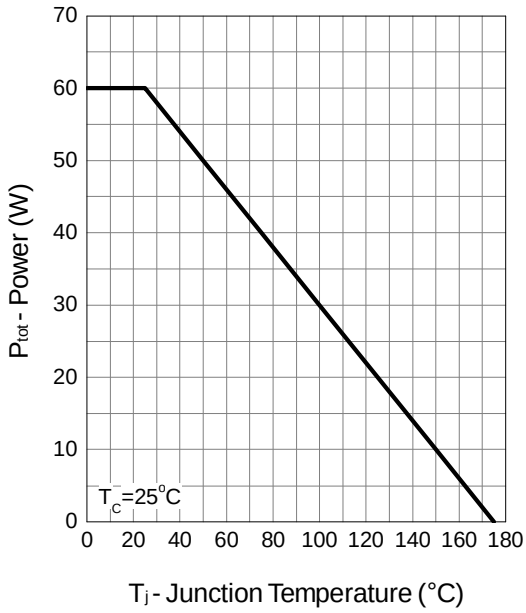

Drain Current

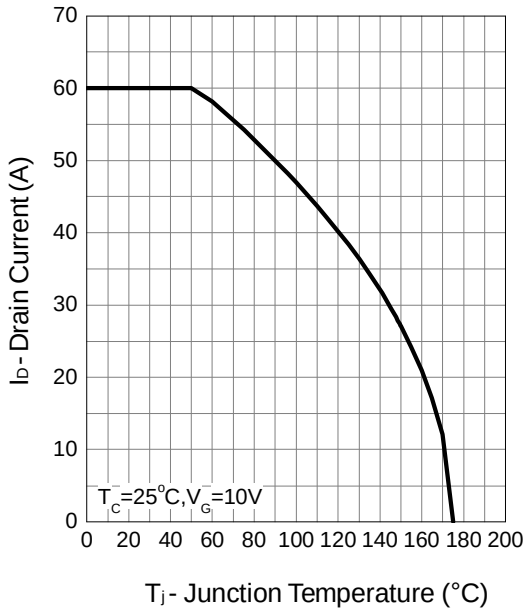

Safe Operation Area

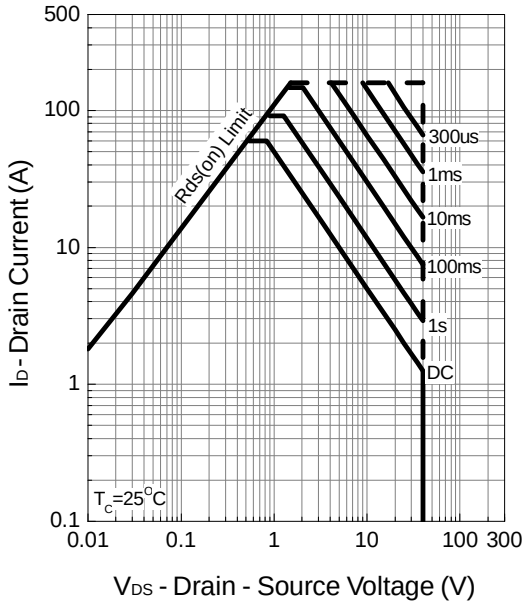

Thermal Transient Impedance

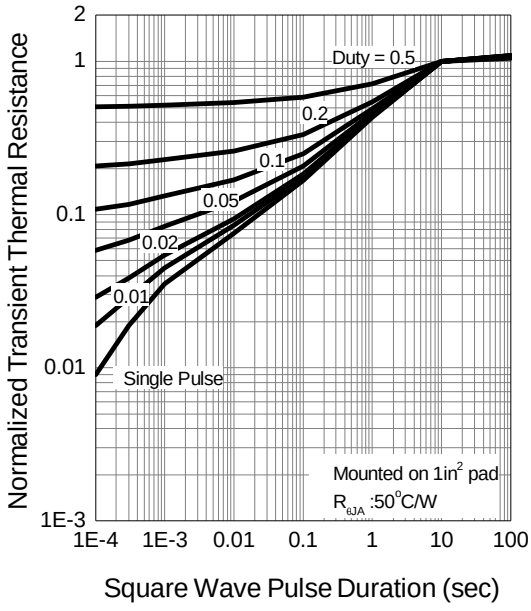

Typical Operating Characteristics (Cont.)

Output Characteristics

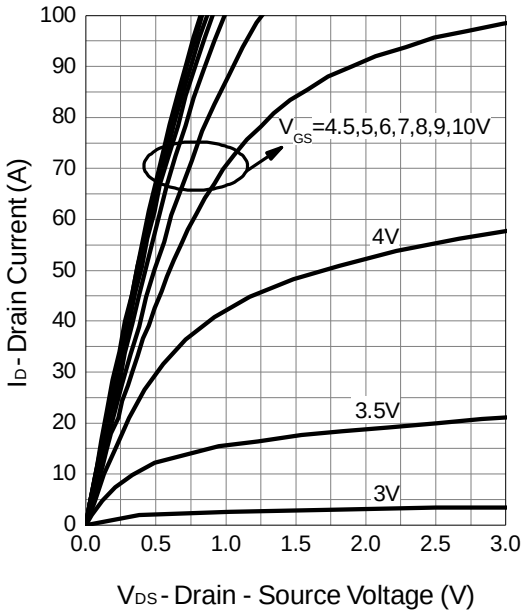

Drain-Source On Resistance

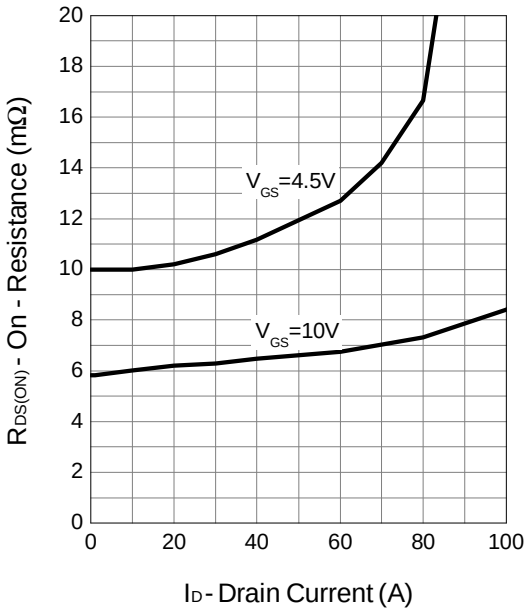

Gate-Source On Resistance

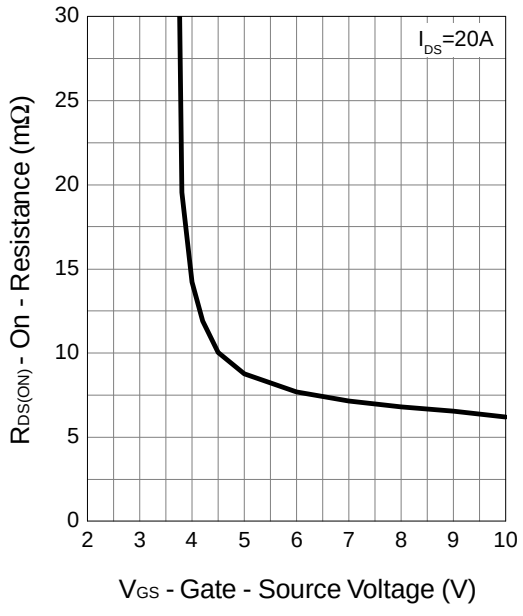

Gate Threshold Voltage

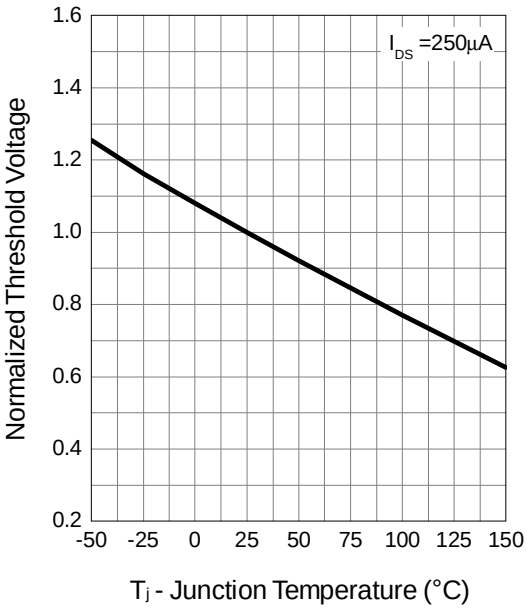

Typical Operating Characteristics (Cont.)

Drain-Source On Resistance

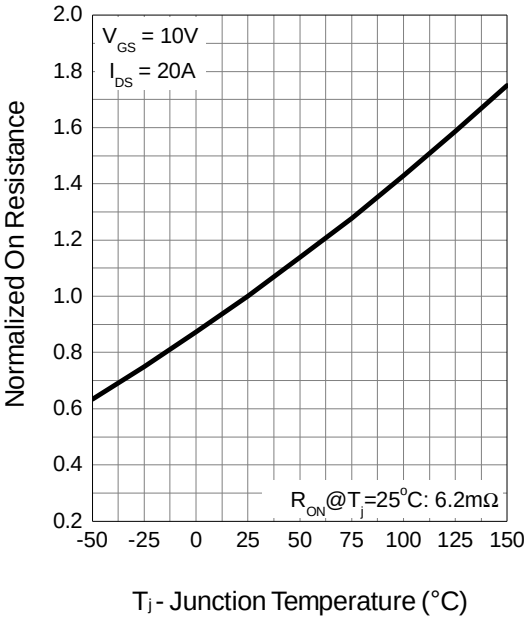

Source-Drain Diode Forward

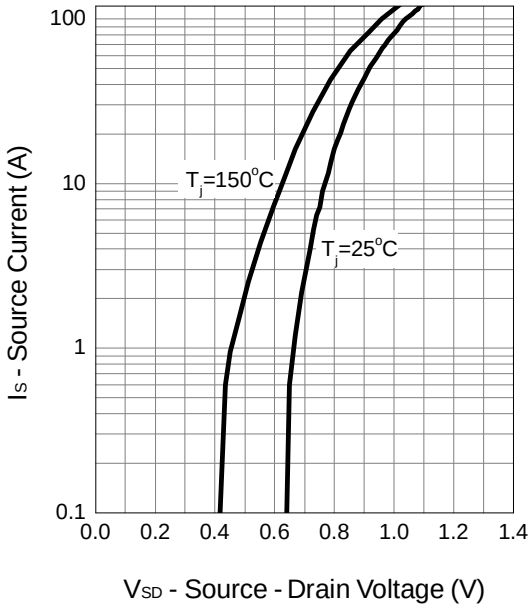

Capacitance

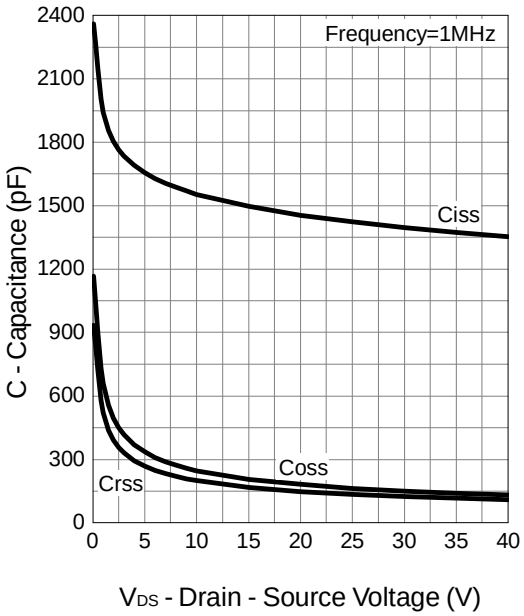

Gate Charge

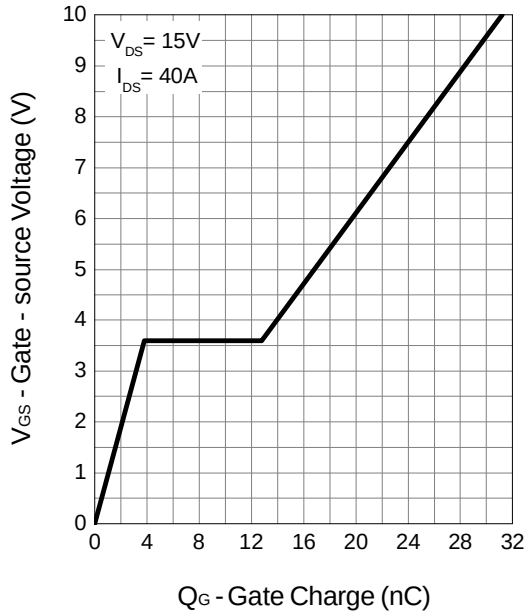

Avalanche Test Circuit and Waveforms

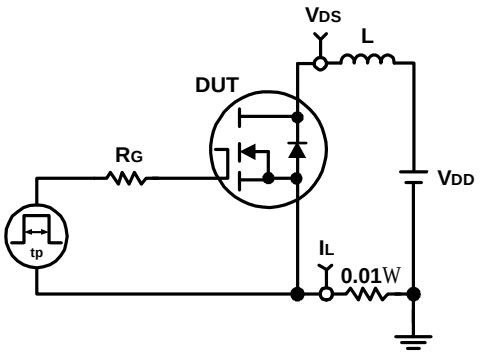

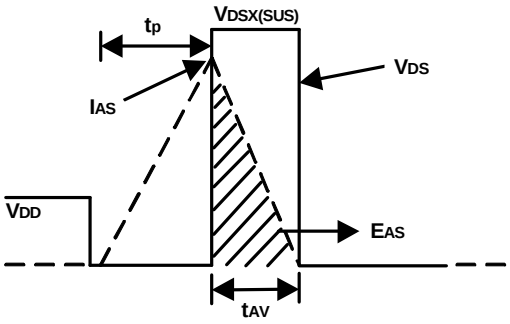

Switching Time Test Circuit and Waveforms

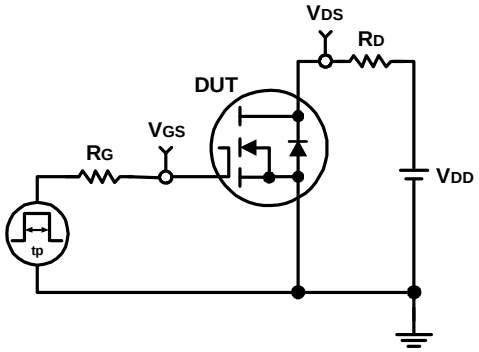

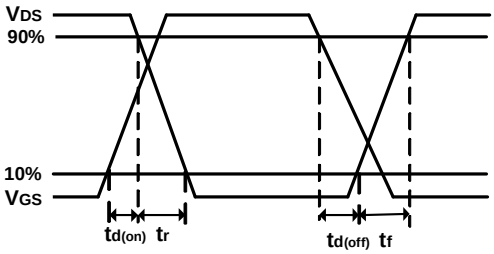

Package Information

TO-252-2

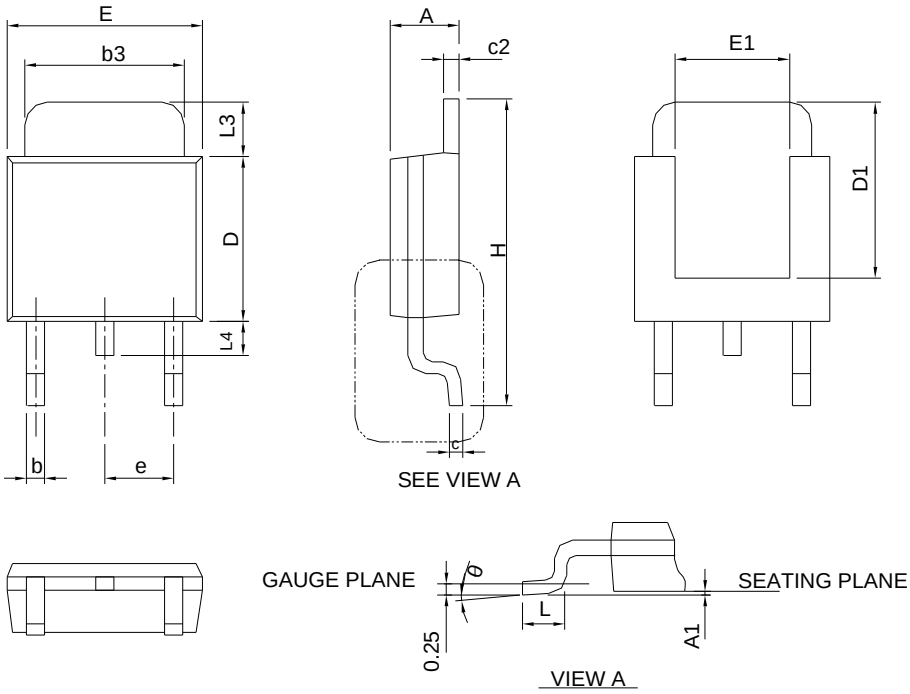

SYMBOL	TO-252-3			
	MILLIMETERS		INCHES	
	MIN.	MAX.	MIN.	MAX.
A	2.18	2.39	0.086	0.094
A1	-	0.13	-	0.005
b	0.50	0.89	0.020	0.035
b3	4.95	5.46	0.195	0.215
c	0.46	0.61	0.018	0.024
c2	0.46	0.89	0.018	0.035
D	5.33	6.22	0.210	0.245
D1	4.57	6.00	0.180	0.236
E	6.35	6.73	0.250	0.265
E1	3.81	6.00	0.150	0.236
e	2.29 BSC		0.090 BSC	
H	9.40	10.41	0.370	0.410
L	0.90	1.78	0.035	0.070
L3	0.89	2.03	0.035	0.080
L4	-	1.02	-	0.040
θ	0°	8°	0°	8°

Note : Follow JEDEC TO-252 .

RECOMMENDED LAND PATTERN

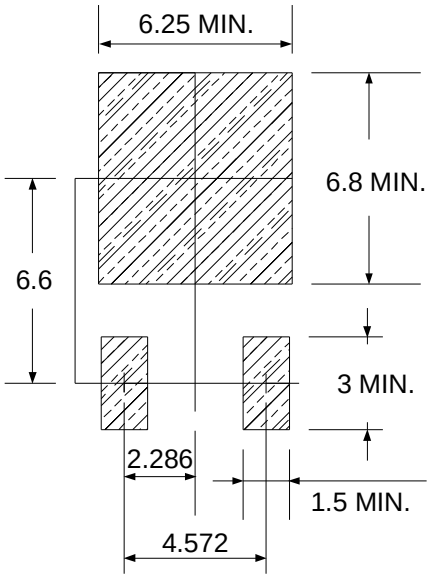

UNIT: mm

ENTEGRECİ

Bu belge www.entegreci.com üzerinden sunulmaktadır.

Elektronik komponent tedarikinde Entegreci

Entegreci, Eskişehir merkezli, Türkiye geneline satış yapan bir elektronik komponent mağazasıdır. Entegreler (IC), mikrodenetleyiciler, transistörler, diyotlar, pasif elemanlar, konnektörler, modüller ve geliştirme kartları tek adetten seri üretim adetlerine kadar satılır. Ürün sayfalarında güncel stok durumunu, fiyatı ve datasheet bağlantısını bulabilirsiniz.

Parça koduyla arama

Üretici parça numarasını yazın; stok ve fiyatı hemen görün.

www.entegreci.com

Ürün kategorileri

Entegreden kapasitöre tüm elektronik komponent kategorileri.

Kategorilere göz atın

Üreticiler

Aradığınız üreticinin ürünlerini tek sayfada inceleyin.

Üreticileri görün

Toplu alım ve teklif

Listede olmayan ya da yüksek adetli parçalar için teklif isteyin.

Teklif isteyin

www.entegreci.com | **destek@entegreci.com** | **0850 305 90 34**

Entegreci is an online electronic components store based in Türkiye. Search by manufacturer part number to see stock, prices and datasheets for integrated circuits, microcontrollers, transistors, passive components and connectors, or request a quote for parts that are not listed.

Bu sayfa Entegreci tarafından eklenmiştir. Belgenin önceki sayfaları asıl yayıncısına aittir ve içeriği değiştirilmemiştir; en güncel sürüm için belgenin yayıncısına başvurun.