650V N-Channel MOSFET

General Description

This Power MOSFET is produced using Slkor's advanced Superjunction MOSFET technology.
This advanced technology has been especially tailored to minimize on-state resistance, provide superior switching performance, and withstand high energy pulse in the avalanche and commutation mode. These devices are well suited for high efficiency switched mode power supplies.

Features

- 22A, 650V, $R_{DS(on)}$ =170mΩ@V_{GS} = 10 V
- Low gate charge(typ. Qg = 30.2nC)
- High ruggedness
- Ultra fast switching
- 100% avalanche tested
- Improved dv/dt capability

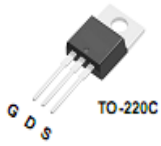

SL22N65C

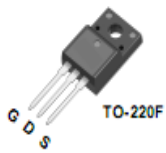

SL22N65CF

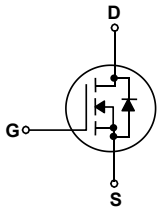

Absolute Maximum Ratings

T_C = 25°C unless otherwise noted

Symbol	Parameter		SL22N65C/SL22N65CF	Units
V_{DSS}	Drain-Source Voltage		650	V
I_D	Drain Current - Continuous (T_C = 25℃)		22 *	A
	- Continuous (T_C = 100℃)		12*	A
I_{DM}	Drain Current - Pulsed	(Note 1)	57 *	A
V_{GSS}	Gate-Source Voltage		±30	V
EAS	Single Pulsed Avalanche Energy	(Note 2)	985	mJ
I_{AR}	Avalanche Current	(Note 1)	4	A
E_{AR}	Repetitive Avalanche Energy	(Note 1)	1.62	mJ
dv/dt	Peak Diode Recovery dv/dt	(Note 3)	20	V/ns
	MOSFET dv/dt		100	
P_D	Power Dissipation (T_C = 25℃)		36	W
	- Derate above 25℃		0.29	W/℃
T_J, T_{STG}	Operating and Storage Temperature Range		-55 to +150	℃
T_L	Maximum lead temperature for soldering purposes, 1/8" from case for 5 seconds		260	℃

* Drain current limited by maximum junction temperature.

Thermal Characteristics

Symbol	Parameter	SL22N65C/SL22N65CF	Units
$R_{\theta JC}$	Thermal Resistance, Junction-to-Case	3.5	℃/W
$R_{\theta JS}$	Thermal Resistance, Case-to-Sink Typ.	-	℃/W
$R_{\theta JA}$	Thermal Resistance, Junction-to-Ambient	62.5	℃/W

Electrical Characteristics

T_C = 25°C unless otherwise noted

Symbol	Parameter	Test Conditions	Min	Typ	Max	Units
Off Characteristics						
BV_{DSS}	Drain-Source Breakdown Voltage	V_{GS} = 0 V, I_D = 1mA	650	--	--	V
BV_{DSS}	Drain-Source Breakdown Voltage	V_{GS} = 0 V, I_D = 1mA,TJ = 150℃	650	--	--	V
I_{DSS}	Zero Gate Voltage Drain Current	V_{DS} = 600 V, V_{GS} = 0 V	--	--	1	uA
		V_{DS} =480 V, T_C = 125℃	--	2	--	uA
I_{GSSF}	Gate-Body Leakage Current, Forward	V_{GS} = 30 V, V_{DS} = 0 V	--	--	100	nA
I_{GSSR}	Gate-Body Leakage Current, Reverse	V_{GS} = -30 V, V_{DS} = 0 V	--	--	-100	nA
On Characteristics						
$V_{GS(th)}$	Gate Threshold Voltage	V_{DS} = V_{GS}, I_D = 1.7mA	2.5	--	4.5	V
$R_{DS(on)}$	Static Drain-Source On-Resistance	V_{GS} = 10 V, I_D = 10 A	--	150	170	mΩ
Dynamic Characteristics						
C_{iss}	Input Capacitance	V_{DS} = 400 V, V_{GS} = 0 V, f = 250KHz	--	1240	--	pF
C_{oss}	Output Capacitance		--	34	--	pF
C_{rss}	Reverse Transfer Capacitance		--	3.2	--	pF
Switching Characteristics						
$t_{d(on)}$	Turn-On Delay Time	V_{DS} = 400 V, I_D = 10 A, R_G = 10 Ω,VGS = 10 V (Note 4, 5)	--	12	--	ns
t_r	Turn-On Rise Time		--	8	--	ns
$t_{d(off)}$	Turn-Off Delay Time		--	53	--	ns
t_f	Turn-Off Fall Time		--	10	--	ns
Q_g	Total Gate Charge	V_{DS} = 400 V, I_D = 10 A, V_{GS} = 10 V (Note 4, 5)	--	30.2	--	nC
Q_{gs}	Gate-Source Charge		--	5.8	--	nC
Q_{gd}	Gate-Drain Charge		--	15.4	--	nC
R_G	Gate Resistance	f = 1MHz		1.3		Ω
Drain-Source Diode Characteristics and Maximum Ratings						
I_S	Maximum Continuous Drain-Source Diode Forward Current		--	--	22	A
I_{SM}	Maximum Pulsed Drain-Source Diode Forward Current		--	--	57	A
V_{SD}	Drain-Source Diode Forward Voltage	V_{GS} = 0 V, I_S = 10 A	--	--	1.2	V
t_{rr}	Reverse Recovery Time	V_{DD} = 400 V, I_S = 10A, dI_F / dt = 100 A/us (Note 4)	--	274	--	ns
Q_{rr}	Reverse Recovery Charge		--	3.33	--	uC

Notes:

1. Repetitive Rating : Pulse width limited by maximum junction temperature
2. L=79mH I_{AS} = I_D, V_{DD} = 50V, R_G = 25Ω, Starting T_J = 25°C
3. I_{SD} ≤ I_D di/dt ≤ 200A/us, V_{DD} ≤400, Starting T_J = 25°C
4. Pulse Test : Pulse width ≤ 300us, Duty cycle ≤ 2%
5. Essentially independent of operating temperature

Typical Characteristics

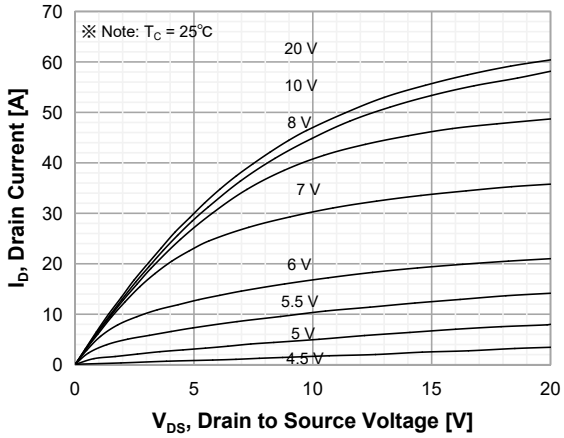

Figure 1. On-Region Characteristics

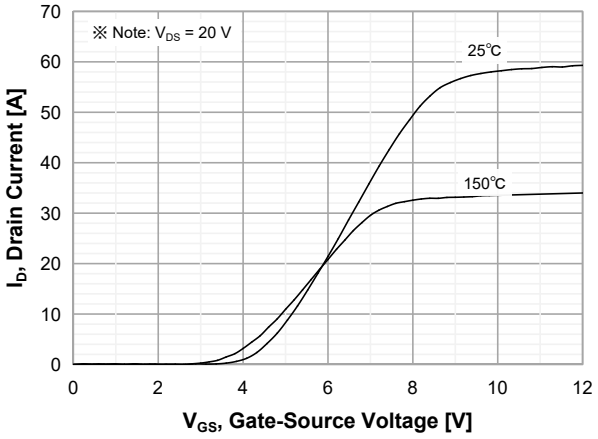

Figure 2. Transfer Characteristics

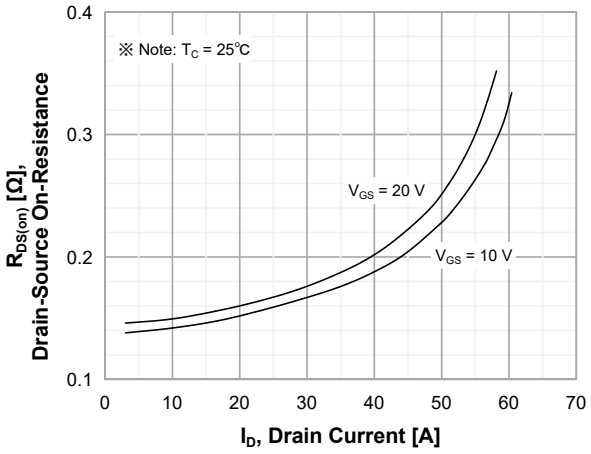

Figure 3. On-Resistance Variation vs Drain Current and Gate Voltage

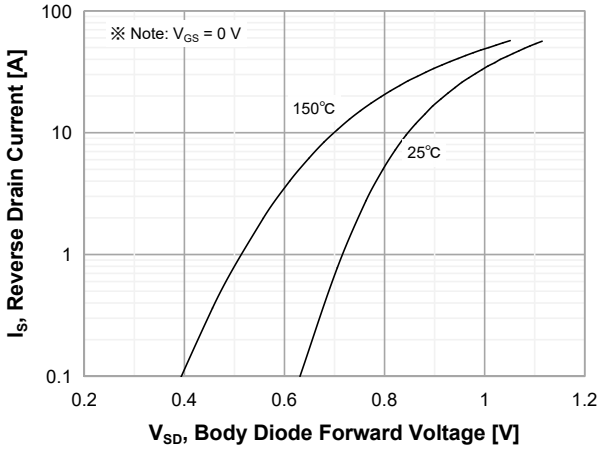

Figure 4. Body Diode Forward Voltage Variation with Source Current and Temperature

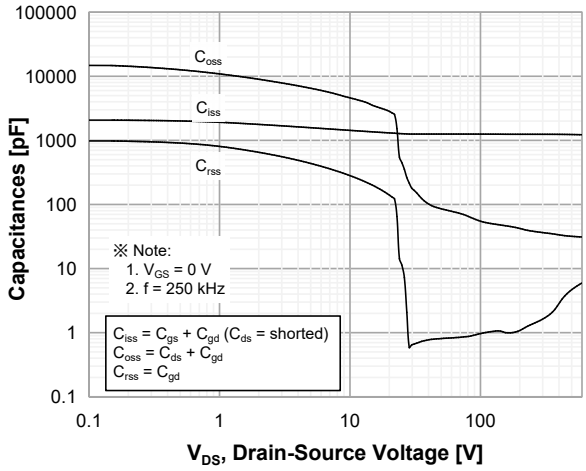

Figure 5. Capacitance Characteristics

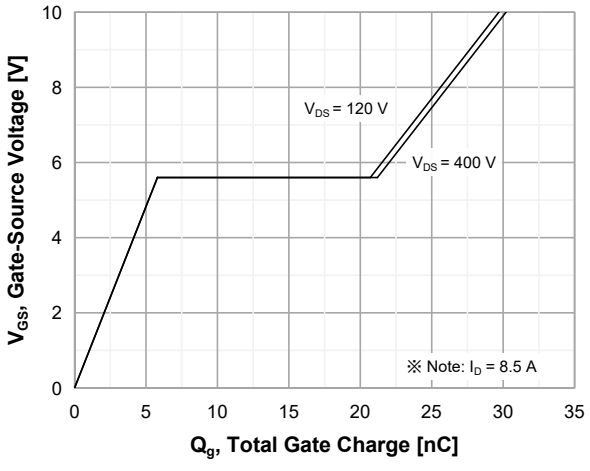

Figure 6. Gate Charge Characteristics

Typical Characteristics (Continued)

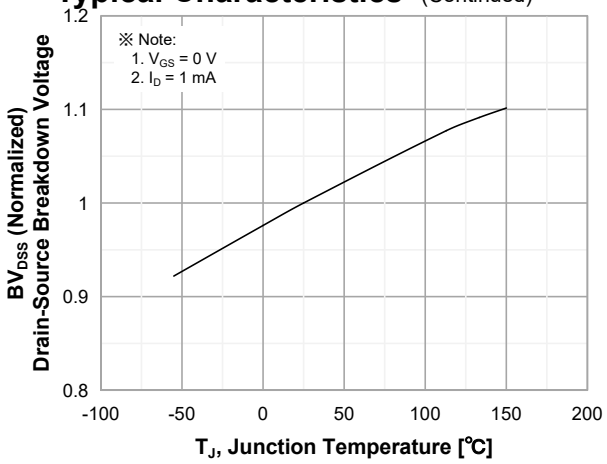

Figure 7. Breakdown Voltage Variation vs Temperature

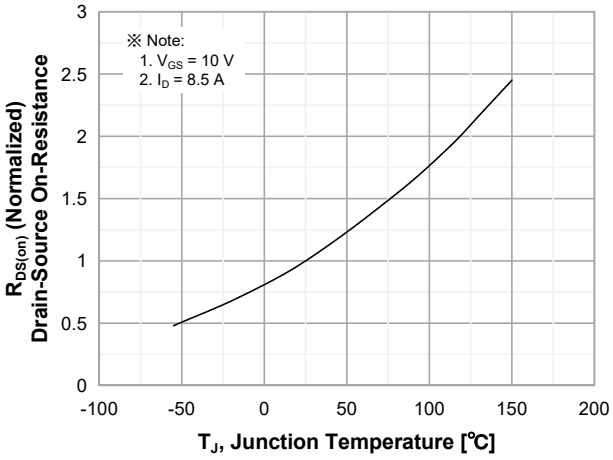

Figure 8. On-Resistance Variation vs Temperature

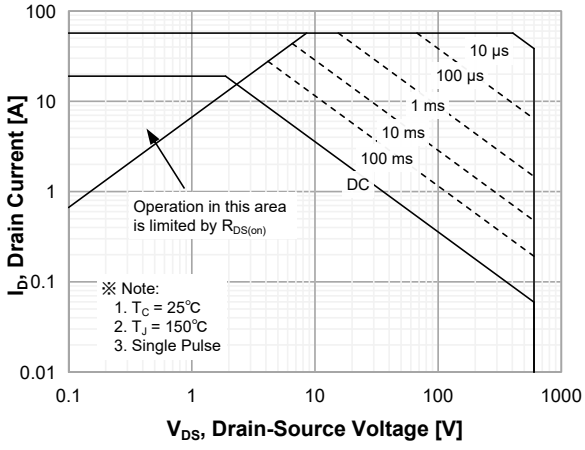

Figure 9. Maximum Safe Operating Area

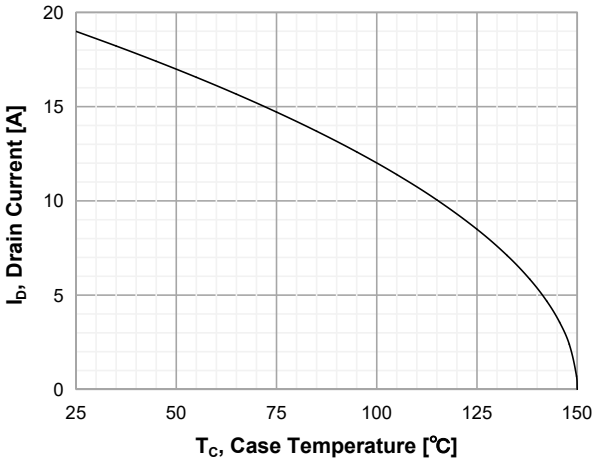

Figure 10. Maximum Drain Current vs. Case Temperature

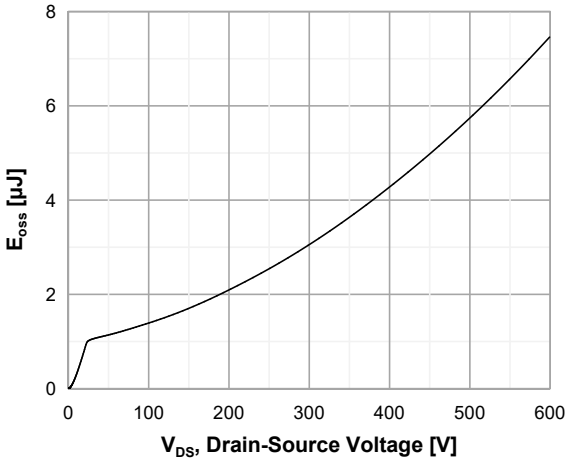

Figure 11.E_{oss} vs. Drain to Source Voltage

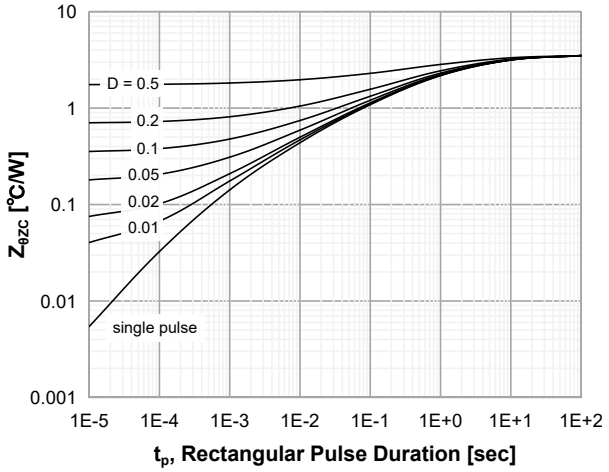

Figure 12.Transient Thermal Response Curve

Gate Charge Test Circuit & Waveform

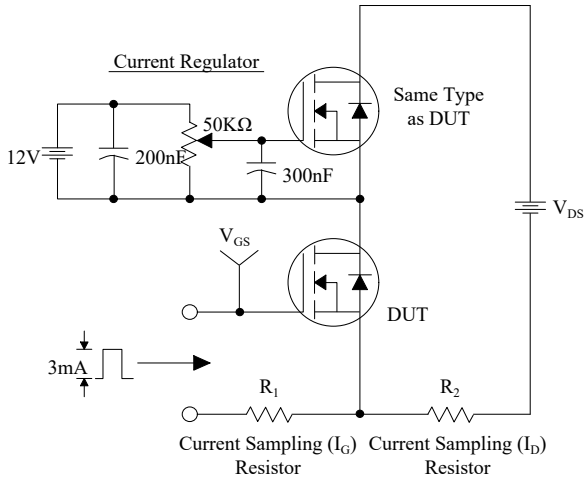

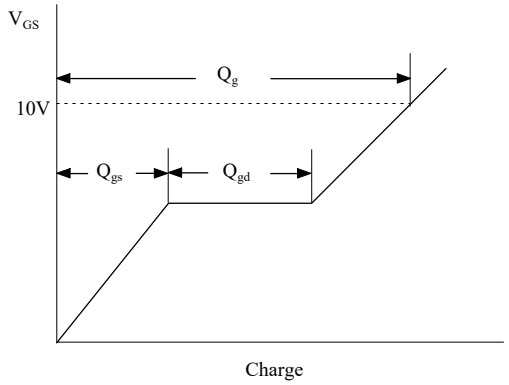

Resistive Switching Test Circuit & Waveforms

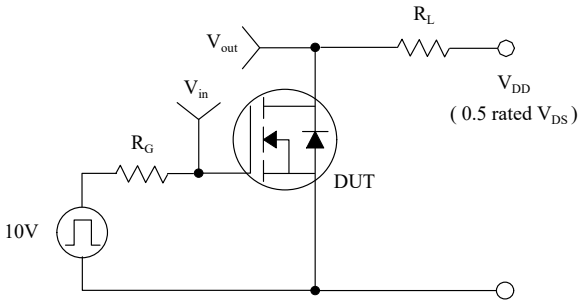

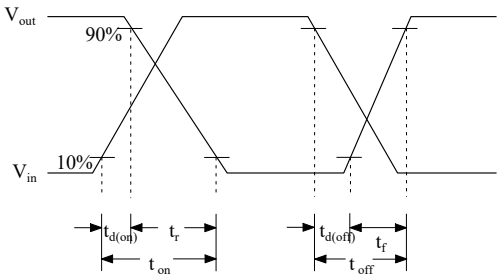

Unclamped Inductive Switching Test Circuit & Waveforms

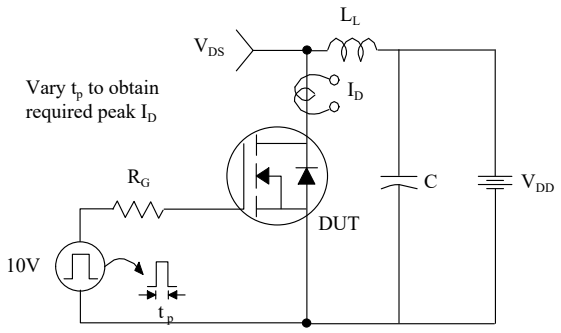

$$E_{AS} = \frac{1}{2} L_L I_{AS}^2$$

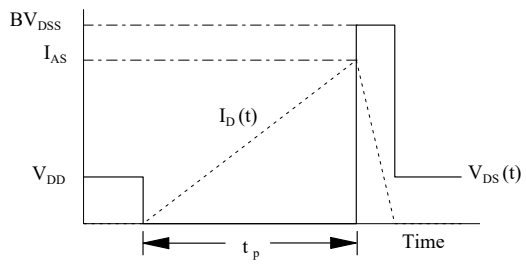

Peak Diode Recovery dv/dt Test Circuit & Waveforms

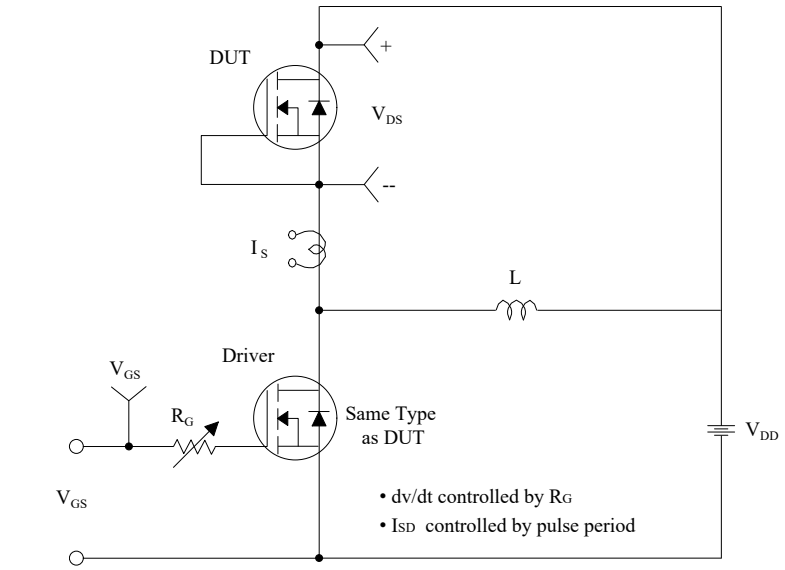

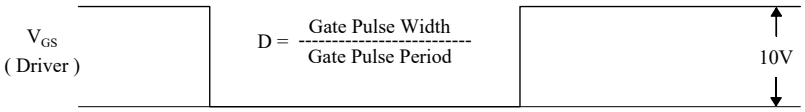

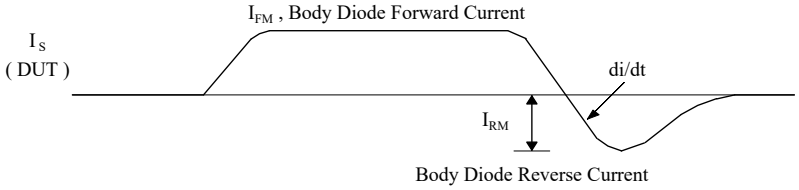

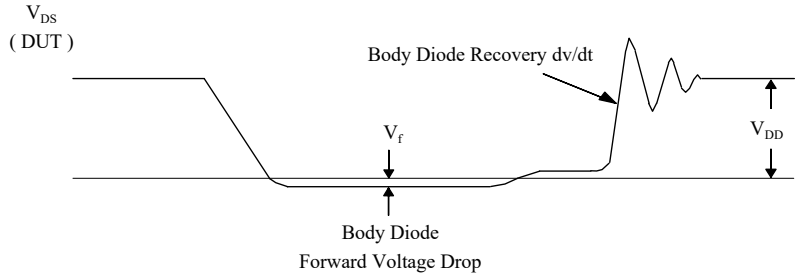

TO-220C OUTLINE

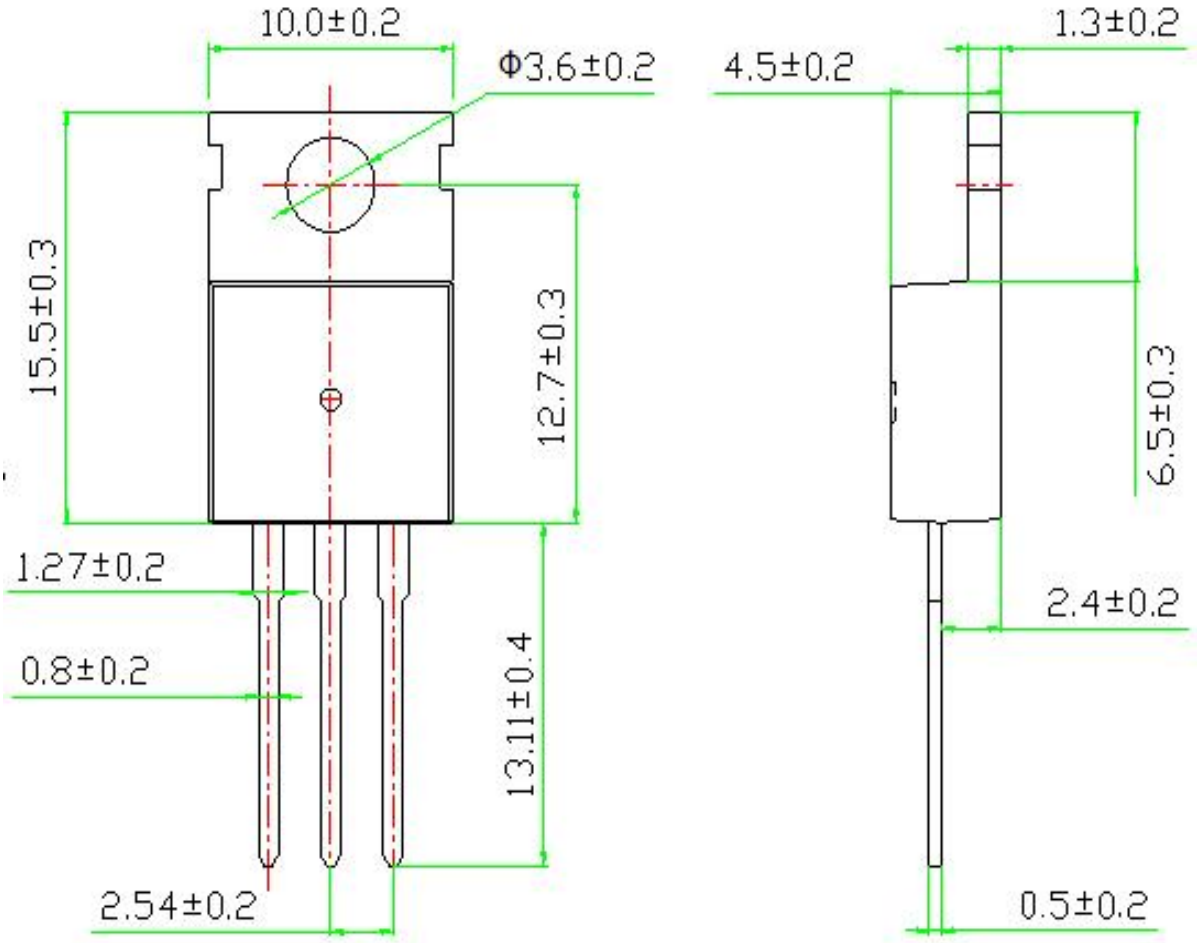

NAME	TO-220C OUTLINE	UNIT	mm	DESIGNED	Shawn Chen	THIRD ANGLE SYSTEM
DWGNO		PAGE	1 OF 1	CHECKED		
VERSION	Ver1.0	ISSUE DATE		APPROVED		

TO-220F OUTLINE

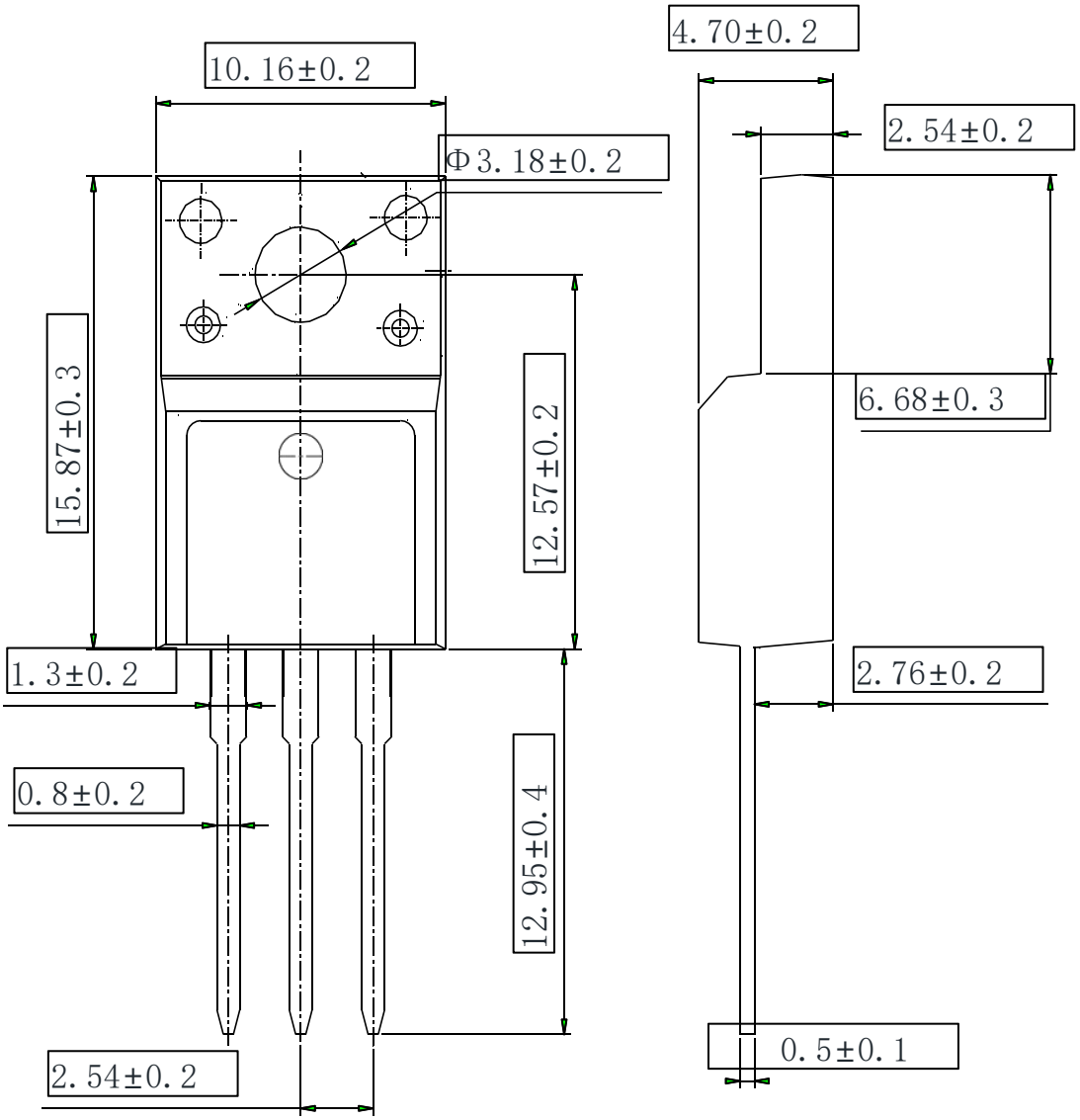

NOTE：
1The plastic package is not marked as smooth surfaceRa=0.1;Subglossy surfaceRa=0.8
2.Undeclared tolerance±0.15,Unmarked filletRmax=0.25

ENTEGRECİ

Bu belge www.entegreci.com üzerinden sunulmaktadır.

Elektronik komponent tedarikinde Entegreci

Entegreci, Eskişehir merkezli, Türkiye geneline satış yapan bir elektronik komponent mağazasıdır. Entegreler (IC), mikrodenetleyiciler, transistörler, diyotlar, pasif elemanlar, konnektörler, modüller ve geliştirme kartları tek adetten seri üretim adetlerine kadar satılır. Ürün sayfalarında güncel stok durumunu, fiyatı ve datasheet bağlantısını bulabilirsiniz.

Parça koduyla arama

Üretici parça numarasını yazın; stok ve fiyatı hemen görün.

www.entegreci.com

Ürün kategorileri

Entegreden kapasitöre tüm elektronik komponent kategorileri.

Kategorilere göz atın

Üreticiler

Aradığınız üreticinin ürünlerini tek sayfada inceleyin.

Üreticileri görün

Toplu alım ve teklif

Listede olmayan ya da yüksek adetli parçalar için teklif isteyin.

Teklif isteyin

www.entegreci.com | **destek@entegreci.com** | **0850 305 90 34**

Entegreci is an online electronic components store based in Türkiye. Search by manufacturer part number to see stock, prices and datasheets for integrated circuits, microcontrollers, transistors, passive components and connectors, or request a quote for parts that are not listed.

Bu sayfa Entegreci tarafından eklenmiştir. Belgenin önceki sayfaları asıl yayıncısına aittir ve içeriği değiştirilmemiştir; en güncel sürüm için belgenin yayıncısına başvurun.