N-Channel Enhancement Mode Power MOSFET

Description

This Power MOSFET is produced using advanced TRENCH technology.
This advanced technology has been especially tailored to minimize conduction loss, provide superior switching performance, and withstand high energy pulse in the avalanche and commutation mode.

Features

- V_{DS}=30V , I_D=120A
- $R_{DS(ON)TYP}$ = 2.6mΩ @V_{GS} =10V
- $R_{DS(ON)TYP}$ = 3.6mΩ @V_{GS} =4.5V
- Very Low On-resistance RDS(ON)
- Low Crss
- Fast switching
- 100% avalanche tested
- Improved dv/dt capability

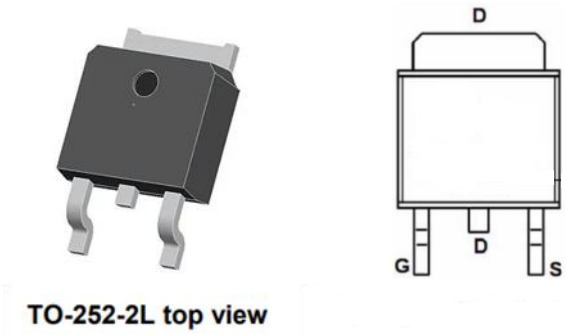

TO-252-2L top view

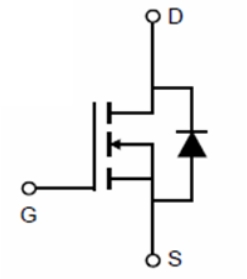

Schematic diagram

Applications

- PWM Application
- Load Switch
- Power Management

Absolute Maximum Ratings

Parameter		Symbol	Value	Unit
Drain-source Voltage		V_{DS}	30	V
Gate-source Voltage		V_{GS}	±20	V
Continuous Drain Current	T_C=25℃	I_D	120	A
	T_C=100℃		78	
Pulsed Drain Current(T_C=25℃,T_p Limited By T_{jmax}) (note1)		I_{DM}	480	A
Maximum Power Dissipation(T_C=25℃)		P_D	88	W
Avalanche energy , single Pulse(L=0.5mH) (note2)		E_{AS}	342	mJ
Operating Junction And Storage Temperature		T_j,T_{stg}	-55 To 150	℃
Maximum lead temperature for soldering purposes, 1/8" from case for 5 seconds		T_L	300	℃

Thermal Resistance

Parameter	Symbol	Max	Unit
Junction-to-Case	$R_{\theta JC}$	1.4	℃/W

Note:

1. Repetitive Rating: Pulse Width Limited by Maximum Junction Temperature
2. EAS condition: T_J =25℃, V_{DD} =30V, V_G =10V, R_G =25Ω, L=0.5mH，I_{AS}=25A
3. Pulse Test: Pulse Width ≤ 300μs, Duty Cycle ≤ 0.5%

Electrical Characteristic (TC=25℃unless otherwise noted)

Parameter	Symbol	Value			Unit	Test Condition
		Min.	Typ.	Max.		
Off Characteristic						
Drain-source breakdown voltage	BV_{DSS}	30	-	-	V	V_{GS}=0V, I_D=250μA
Zero gate voltage drain current	I_{DSS}	-	-	1	μA	V_{DS}=30V, V_{GS}=0V
Gate-source leakage current	I_{GSS}	-	-	±100	nA	V_{GS}=±20V, V_{DS}=0V
On Characteristics						
Gate threshold voltage	$V_{GS(th)}$	1.0	1.5	2.2	V	V_{DS}=V_{GS}, I_D=250μA
Drain-source on-state resistance	$R_{DS(on)}$	-	2.6	3.5	mΩ	V_{GS}=10V, I_D=20A
		-	3.6	4.8	mΩ	V_{GS}=4.5V, I_D=15A
Dynamic Characteristic						
Input Capacitance	C_{iss}	-	4000	-	PF	V_{GS}=0V, V_{DS}=15V, f=1.0MHz
Output Capacitance	C_{oss}	-	437	-		
Reverse Transfer Capacitance	C_{rss}	-	396	-		
Switching Characteristics						
Turn-on delay time	$t_{d(on)}$	-	14	-	nS	V_{DS}=15V, I_D=30A, V_{GS}=10V R_L=3Ω, Tj=25℃
Turn-on Rise time	t_r	-	18	-		
Turn-off delay time	$t_{d(off)}$	-	40			
Turn-off Fall time	t_f	-	12	-		
Gate Total Charge	Q_G	-	72	-	nC	V_{GS}=10V, V_{DS}=15V, I_D=30A
Gate-Source Charge	Q_{gS}	-	46	-		
Gate-Drain Charge	Q_{gd}	-	13	-		
Drain-Source Diode Characteristics						
Body Diode Forward Voltage	V_{SD}	-	-	1.2	V	V_{GS}=0V, I_{SD}=30A, T_J=25℃
Body Diode Forward Current	Is	-	-	120	A	-
Body Diode Reverse Recovery Time	T_{rr}	-	48	-	ns	T_J=25℃, I_{SD}=30A, V_{GS}=0V, d_i/d_t =100A/μs
Body Diode Reverse Recovery Charge	Q_{rr}	-	80	-	nC	

N- Channel Typical Characteristics

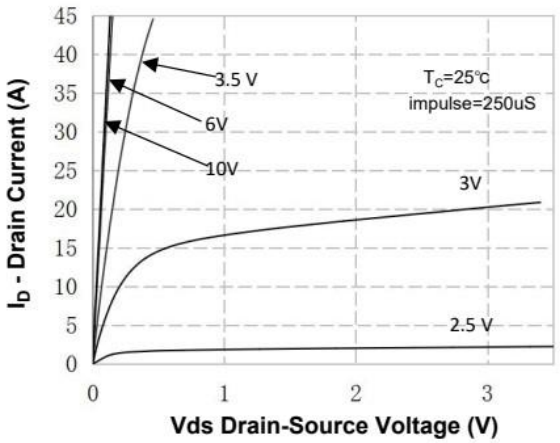

Figure 1. On-Region Characteristics

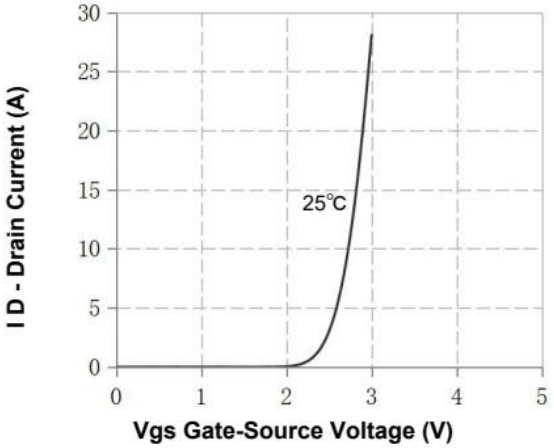

Figure 2. Transfer Characteristics

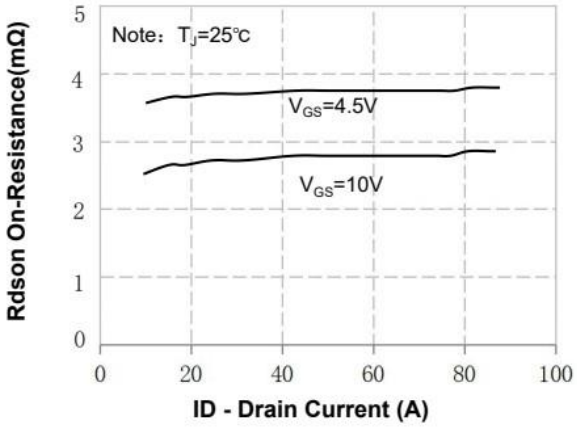

Figure 3. On-Resistance Variation vs Drain Current and Gate Voltage

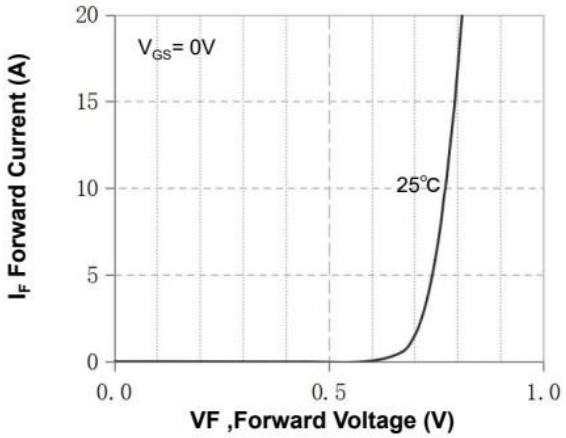

Figure 4. Body Diode Forward Voltage Variation with Source Current and Temperature

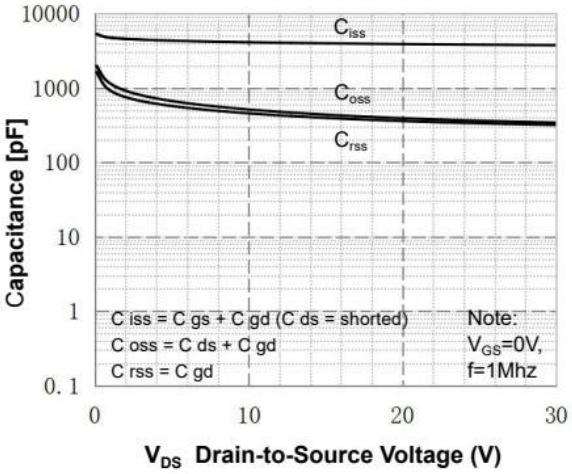

Figure 5. Capacitance Characteristics

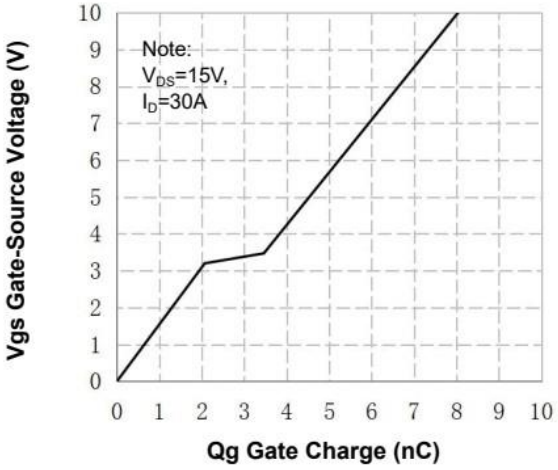

Figure 6. Gate Charge Characteristics

N- Channel Typical Characteristics (Continued)

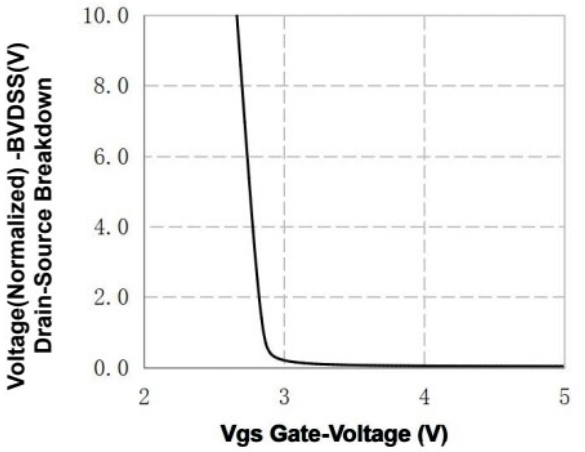

Figure 7. Breakdown Voltage Variation vs Gate-Voltage

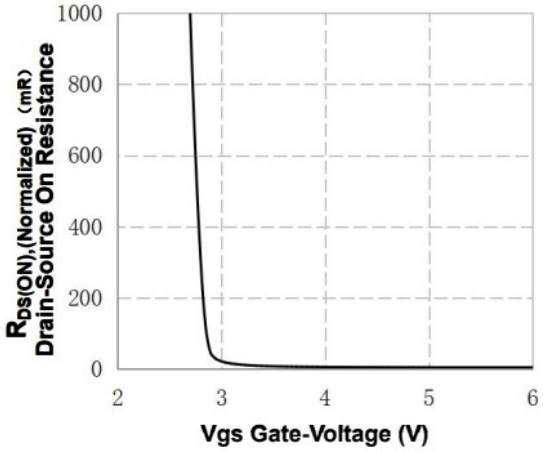

Figure 8. On-Resistance Variation vs Gate Voltage

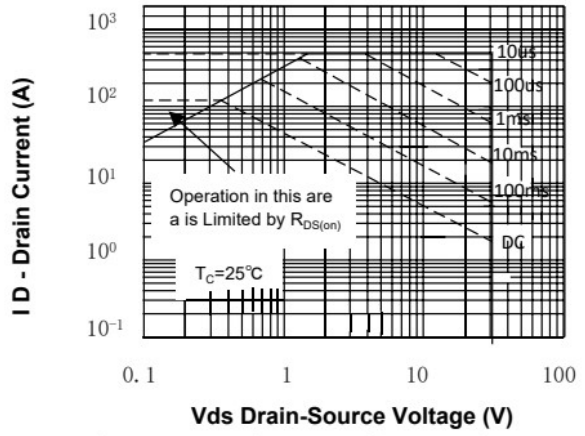

Figure 9. Maximum Safe Operating Area

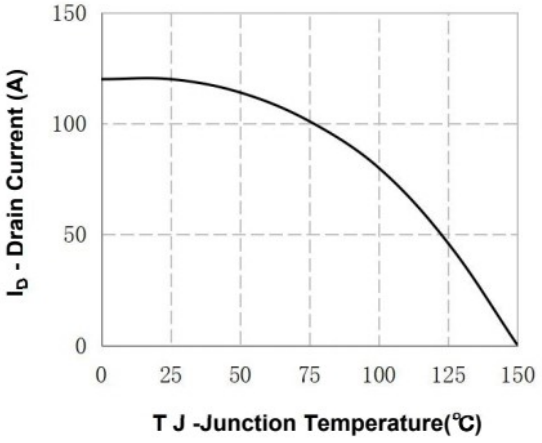

Figure 10. Maximum PContinuous Drain Currentvs Case Temperature

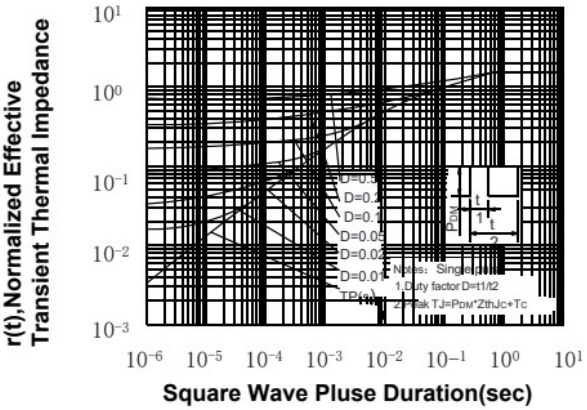

Figure 11. Transient Thermal Response Curve

Gate Charge Test Circuit & Waveform

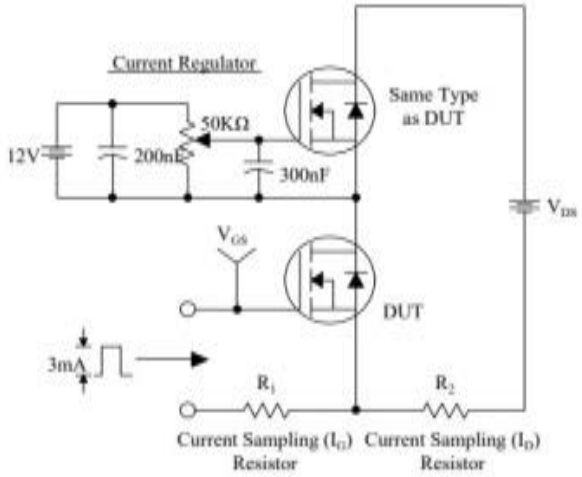

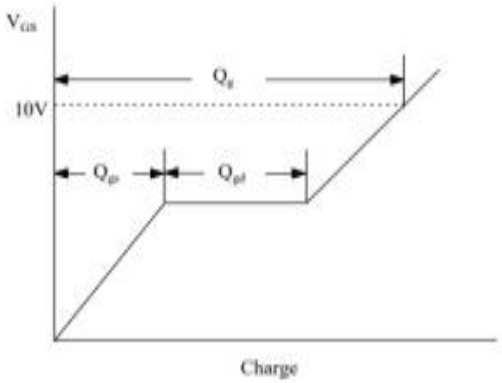

Resistive Switching Test Circuit & Waveforms

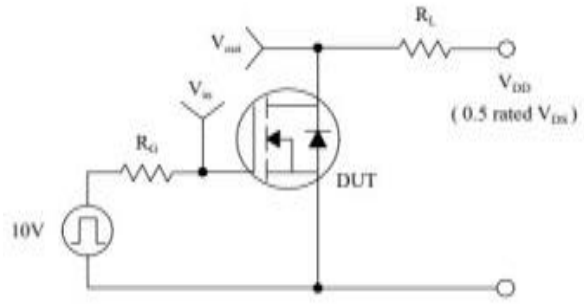

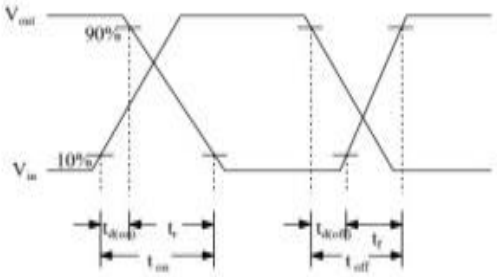

Unclamped Inductive Switching Test Circuit & Waveforms

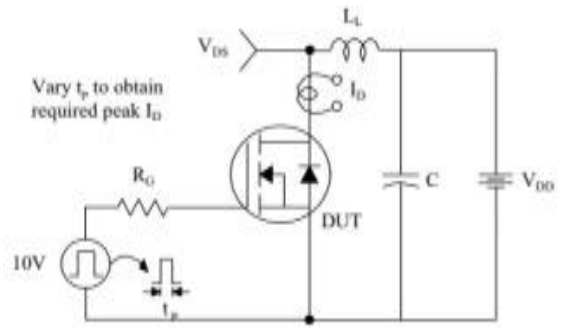

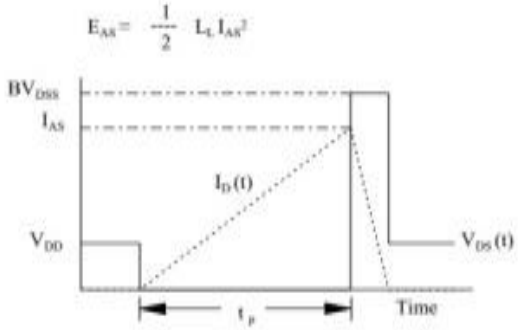

Peak Diode Recovery dv/dt Test Circuit & Waveforms

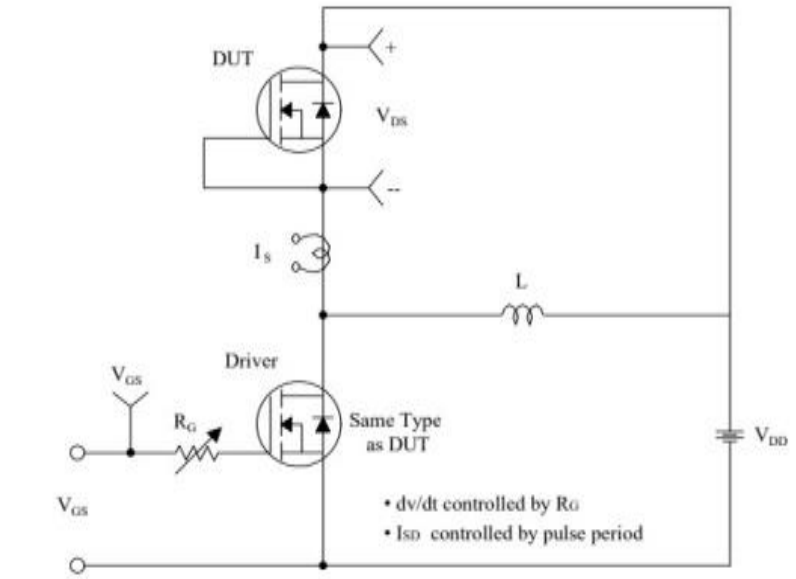

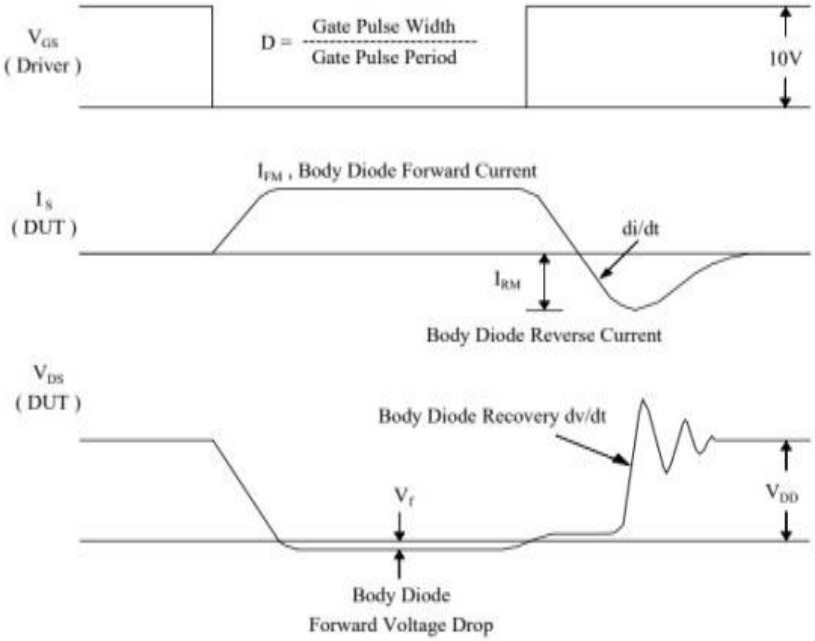

Package Information

TO-252 DPAK

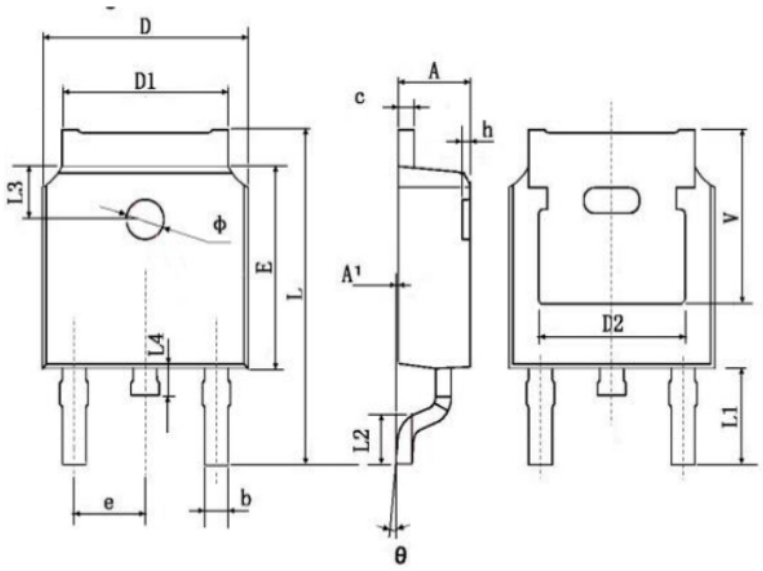

Symbol	Dimensions In Millimeters		Dimensions In Inches	
	Min.	Max.	Min.	Max.
A	2.250	2.350	0.089	0.093
A1	0.050	0.150	0.002	0.006
b	0.660	0.860	0.026	0.034
c	0.458	0.558	0.018	0.022
D	6.550	6.650	0.259	0.263
D1	5.234	5.434	0.207	0.215
D2	4.826 TYP.		0.191 TYP.	
E	6.050	6.150	0.239	0.243
e	2.236	2.336	0.088	0.092
L	9.820	10.220	0.388	0.404
L1	3.000 TYP.		0.119 TYP.	
L2	1.400	1.600	0.055	0.063
L3	1.800 TYP.		0.071 TYP.	
L4	0.700	0.900	0.028	0.036
Φ	1.150	1.250	0.045	0.049
θ	0°	3°	0°	3°
h	0.000	0.300	0.000	0.012
V	5.399 TYP		0.213 TYP	

ENTEGRECİ

Bu belge www.entegreci.com üzerinden sunulmaktadır.

Elektronik komponent tedarikinde Entegreci

Entegreci, Eskişehir merkezli, Türkiye geneline satış yapan bir elektronik komponent mağazasıdır. Entegreler (IC), mikrodenetleyiciler, transistörler, diyotlar, pasif elemanlar, konnektörler, modüller ve geliştirme kartları tek adetten seri üretim adetlerine kadar satılır. Ürün sayfalarında güncel stok durumunu, fiyatı ve datasheet bağlantısını bulabilirsiniz.

Parça koduyla arama

Üretici parça numarasını yazın; stok ve fiyatı hemen görün.

www.entegreci.com

Ürün kategorileri

Entegreden kapasitöre tüm elektronik komponent kategorileri.

Kategorilere göz atın

Üreticiler

Aradığınız üreticinin ürünlerini tek sayfada inceleyin.

Üreticileri görün

Toplu alım ve teklif

Listede olmayan ya da yüksek adetli parçalar için teklif isteyin.

Teklif isteyin

www.entegreci.com | **destek@entegreci.com** | **0850 305 90 34**

Entegreci is an online electronic components store based in Türkiye. Search by manufacturer part number to see stock, prices and datasheets for integrated circuits, microcontrollers, transistors, passive components and connectors, or request a quote for parts that are not listed.

Bu sayfa Entegreci tarafından eklenmiştir. Belgenin önceki sayfaları asıl yayıncısına aittir ve içeriği değiştirilmemiştir; en güncel sürüm için belgenin yayıncısına başvurun.