Pch -20V -200mA Small Signal MOSFET

V_{DSS}	-20V
$R_{DS(on)}$(Max.)	1.2Ω
I_D	±200mA
P_D	150mW

●Outline

SOT-723



●Inner circuit

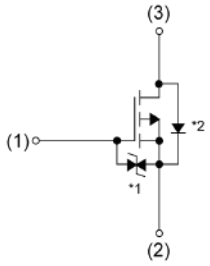

(1) Gate
(2) Source
(3) Drain

*1 ESD Protection Diode
*2 Body Diode

●Features

1) High speed switching
2) Small package (SOT-723).
3) Low voltage drive(1.2V) makes this device ideal for partable equipment.

●Application

Switching

●Absolute maximum ratings (T_a = 25°C ,unless otherwise specified)

Parameter	Symbol	Value	Unit
Drain - Source voltage	V_{DSS}	-20	V
Continuous drain current	I_D	±200	mA
Pulsed drain current	I_{DP}*1	±800	mA
Gate - Source voltage	V_{GSS}	±10	V
Power dissipation	P_D*2	150	mW
Junction temperature	T_j	150	℃
Operating junction and storage temperature range	T_{stg}	-55 to +150	℃

●Thermal resistance

Parameter	Symbol	Values			Unit
		Min.	Typ.	Max.	
Thermal resistance, junction - ambient	R_{thJA} *2	-	-	833	℃/W

●Electrical characteristics (T_a = 25°C)

Parameter	Symbol	Conditions	Values			Unit
			Min.	Typ.	Max.	
Drain - Source breakdown voltage	$V_{(BR)DSS}$	V_{GS} = 0V, I_D = -1mA	-20	-	-	V
Breakdown voltage temperature coefficient	$\frac{\Delta V_{(BR)DSS}}{\Delta T_j}$	I_D = -1mA referenced to 25℃	-	-21.9	-	mV/℃
Zero gate voltage drain current	I_{DSS}	V_{DS} = -20V, V_{GS} = 0V	-	-	-1	μA
Gate - Source leakage current	I_{GSS}	V_{GS} = ±10V, V_{DS} = 0V	-	-	±10	μA
Gate threshold voltage	$V_{GS(th)}$	V_{DS} = -10V, I_D = -100μA	-0.3	-	-1.0	V
Gate threshold voltage temperature coefficient	$\frac{\Delta V_{GS(th)}}{\Delta T_j}$	I_D = -1mA referenced to 25℃	-	2.4	-	mV/℃
Static drain - source on - state resistance	$R_{DS(on)}$ *3	V_{GS} = -4.5V, I_D = -200mA	-	0.8	1.2	Ω
		V_{GS} = -2.5V, I_D = -100mA	-	1.0	1.5	
		V_{GS} = -1.8V, I_D = -100mA	-	1.3	2.2	
		V_{GS} = -1.5V, I_D = -40mA	-	1.6	3.5	
		V_{GS} = -1.2V, I_D = -10mA	-	2.4	9.6	
Forward Transfer Admittance	$\|Y_{fs}\|$ *3	V_{DS} = -10V, I_D = -200mA	200	-	-	mS

*1 Pw≦10μs , Duty cycle≦1%

*2 Each terminal mounted on a reference land.

*3 Pulsed

●Electrical characteristics (T_a = 25°C)

Parameter	Symbol	Conditions	Values			Unit
			Min.	Typ.	Max.	
Input capacitance	C_{iss}	V_{GS} = 0V	-	115	-	pF
Output capacitance	C_{oss}	V_{DS} = -10V	-	10	-	
Reverse transfer capacitance	C_{rss}	f = 1MHz	-	6	-	
Turn - on delay time	$t_{d(on)}$ *3	$V_{DD} \simeq$ -10V, V_{GS} = -4.5V	-	6	-	ns
Rise time	t_r *3	I_D = -100mA	-	4	-	
Turn - off delay time	$t_{d(off)}$ *3	$R_L \simeq$ 100Ω	-	17	-	
Fall time	t_f *3	R_G = 10Ω	-	17	-	

●Gate charge characteristics (T_a = 25°C)

Parameter	Symbol	Conditions	Values			Unit
			Min.	Typ.	Max.	
Total gate charge	Q_g *3	$V_{DD} \simeq$ -10V, I_D = -200mA, V_{GS} = -4.5V	-	1.4	-	nC
Gate - Source charge	Q_{gs} *3		-	0.3	-	
Gate - Drain charge	Q_{gd} *3		-	0.3	-	

●Body diode electrical characteristics (Source-Drain) (T_a = 25°C)

Parameter	Symbol	Conditions	Values			Unit
			Min.	Typ.	Max.	
Continuous forward current	I_S	T_a = 25°C	-	-	-100	mA
Pulse forward current	I_{SP} *1		-	-	-800	mA
Forward voltage	V_{SD} *3	V_{GS} = 0V, I_S = -200mA	-	-	-1.2	V

●Electrical characteristic curves

Fig.1 Power Dissipation Derating Curve

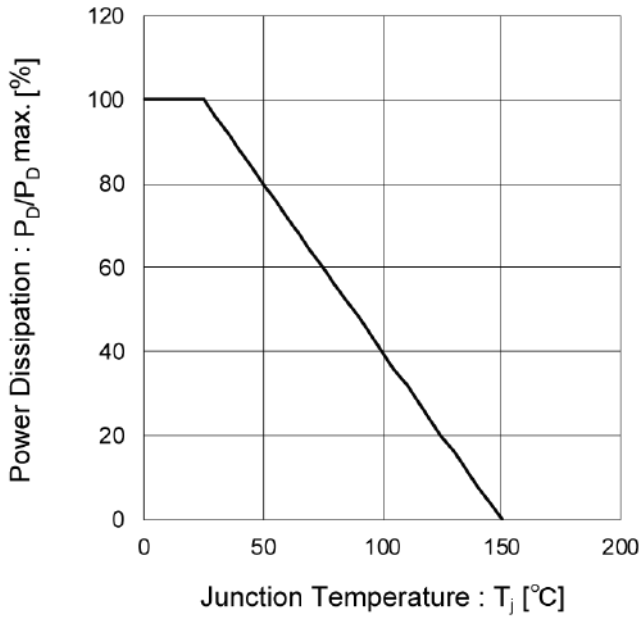

Fig.2 Drain Current Derating Curve

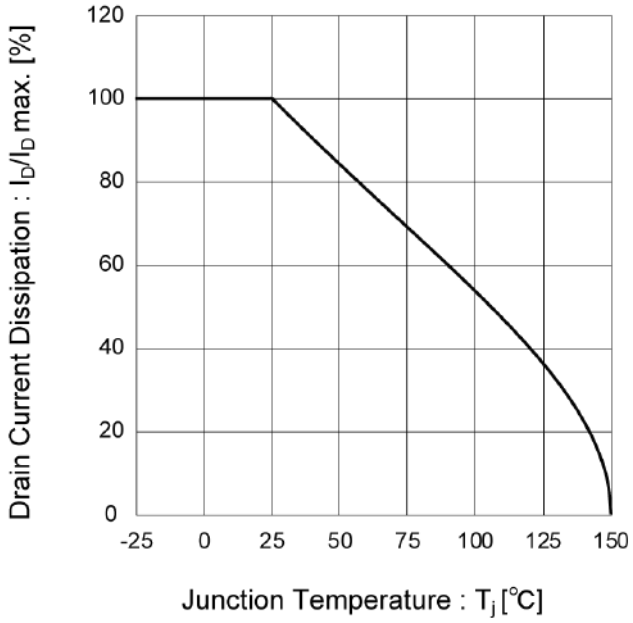

Fig.3 Typical Output Characteristics(I)

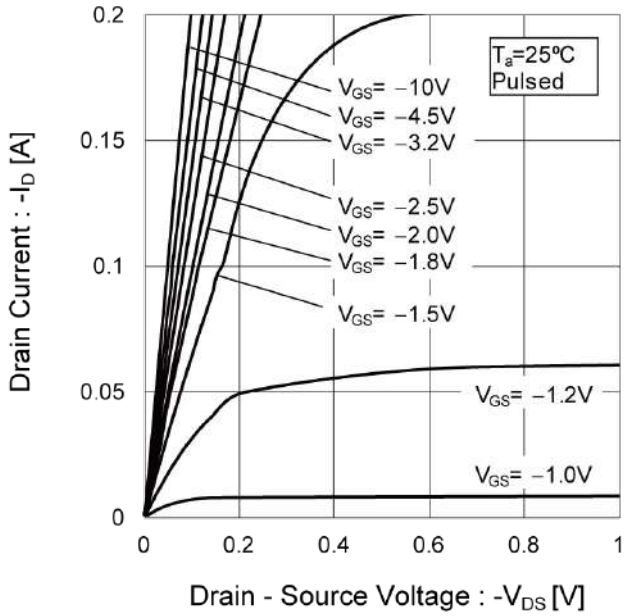

Fig.4 Typical Output Characteristics(II)

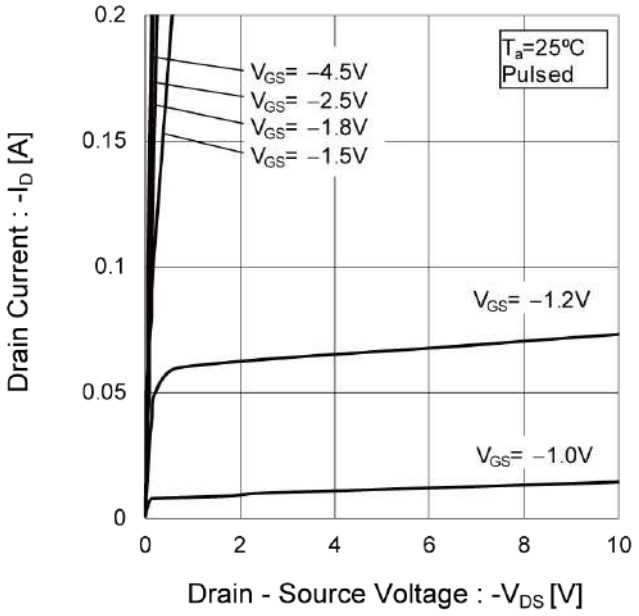

●Electrical characteristic curves

Fig.5 Breakdown Voltage vs. Junction Temperature

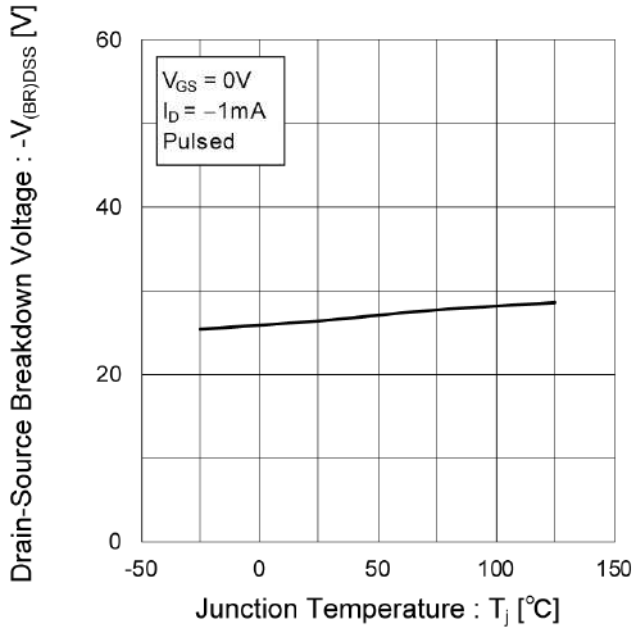

Fig.6 Typical Transfer Characteristics

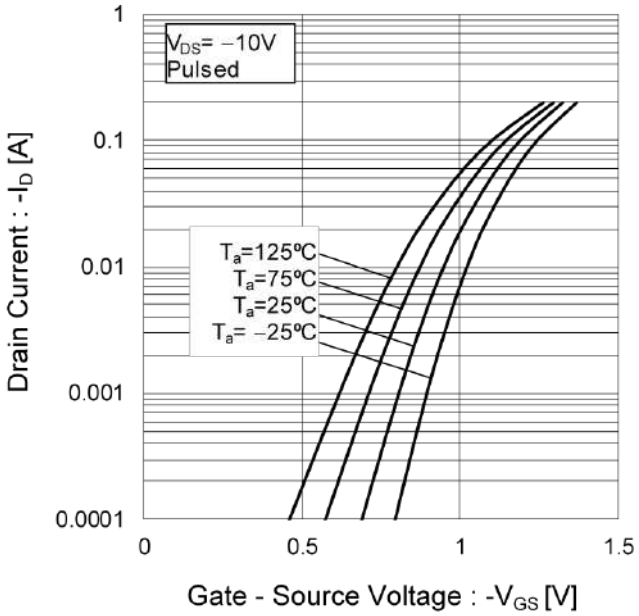

Fig.7 Gate Threshold Voltage vs. Junction Temperature

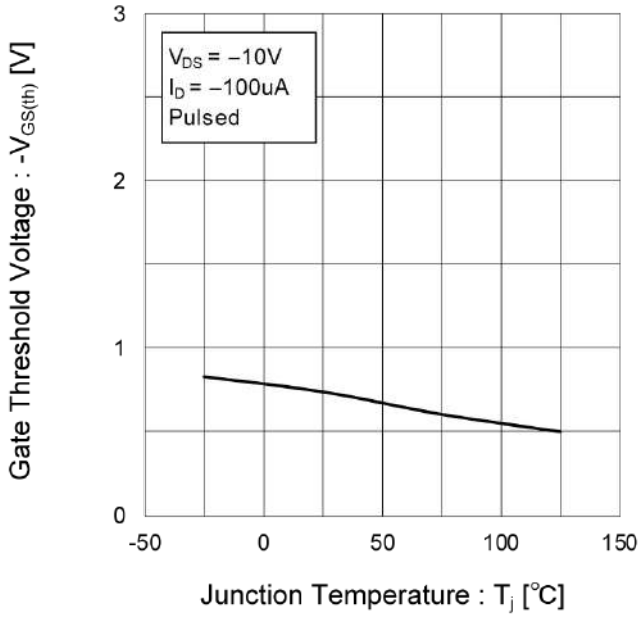

Fig.8 Forward Transfer Admittance vs. Drain Current

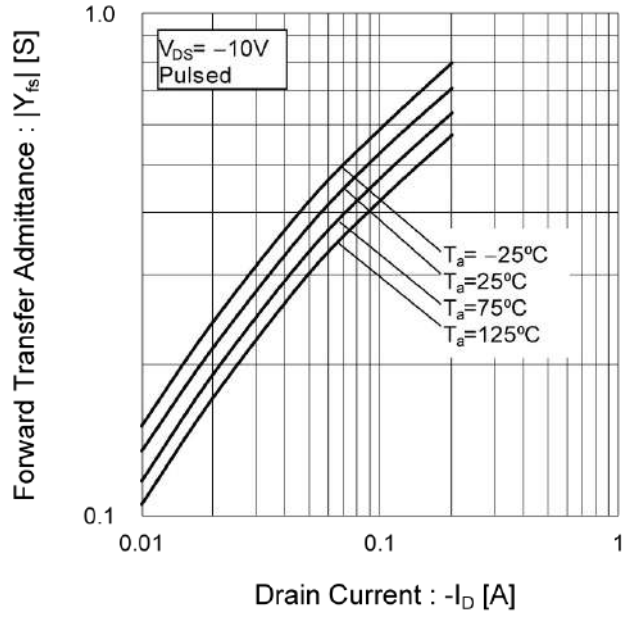

●Electrical characteristic curves

Fig.9 Static Drain - Source On - State Resistance vs. Gate Source Voltage

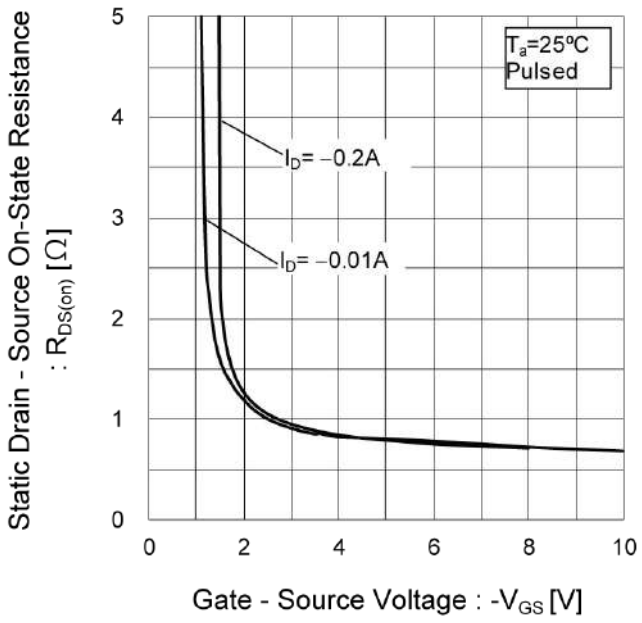

Fig.10 Static Drain - Source On - State Resistance vs. Junction Temperature

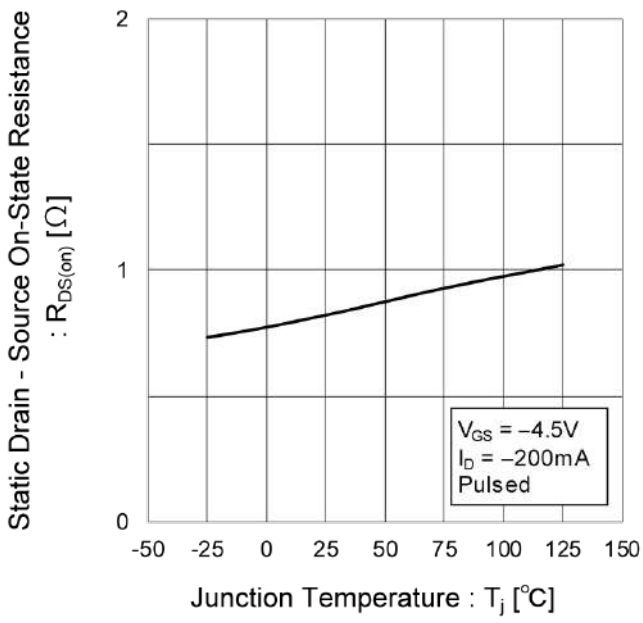

Fig.11 Static Drain - Source On - State Resistance vs. Drain Current (I)

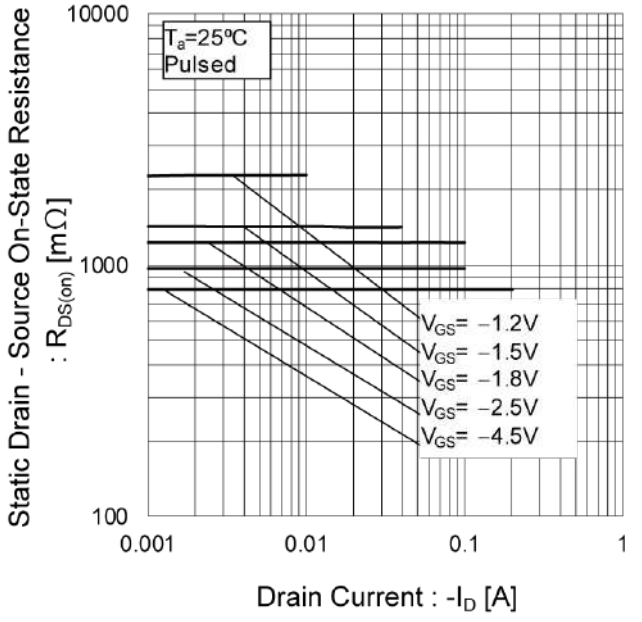

Fig.12 Static Drain - Source On - State Resistance vs. Drain Current (II)

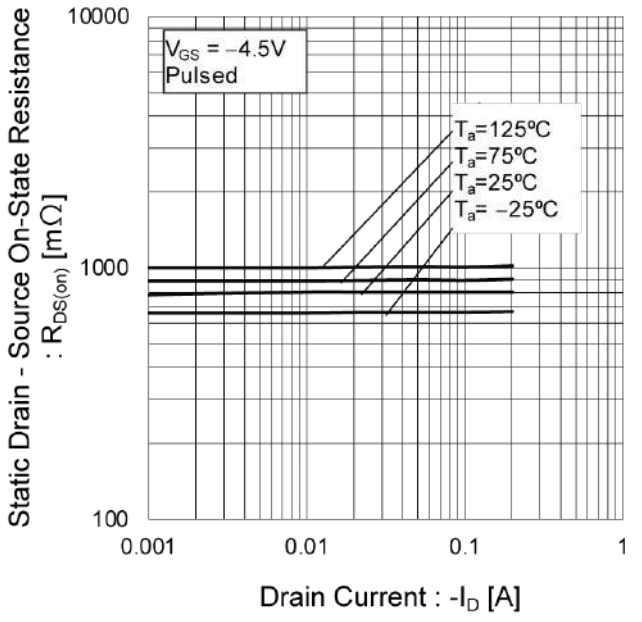

●Electrical characteristic curves

Fig.13 Static Drain - Source On - State Resistance vs. Drain Current (III)

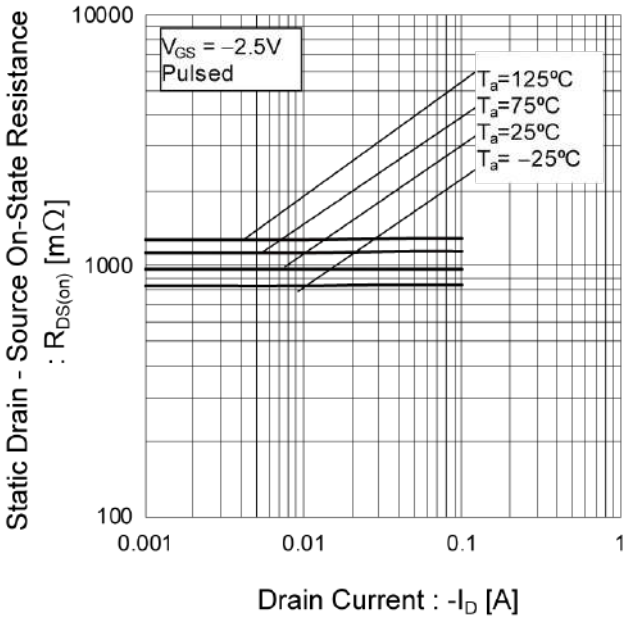

Fig.14 Static Drain - Source On - State Resistance vs. Drain Current (IV)

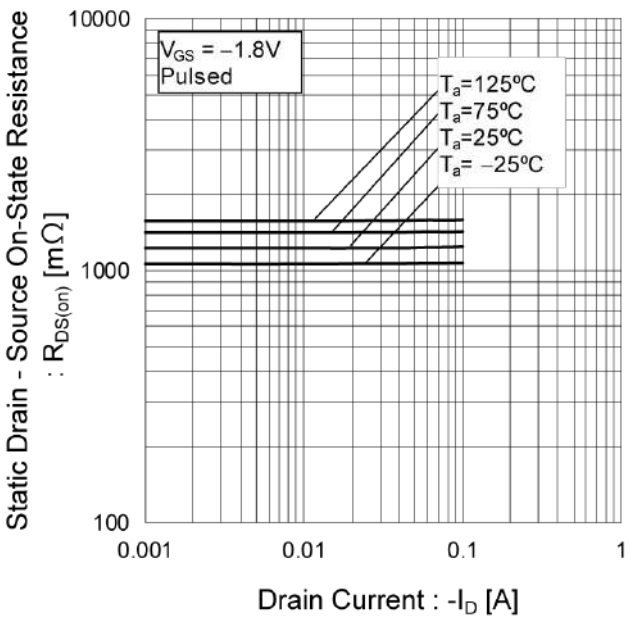

Fig.15 Static Drain - Source On - State Resistance vs. Drain Current (V)

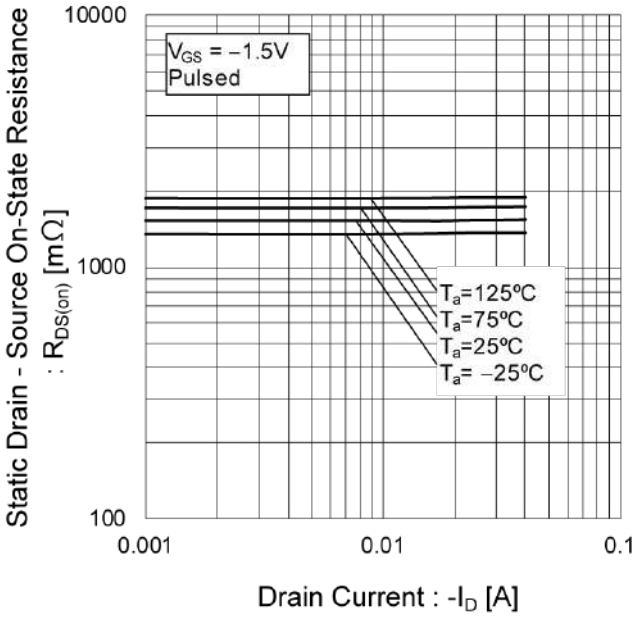

Fig.16 Static Drain - Source On - State Resistance vs. Drain Current (VI)

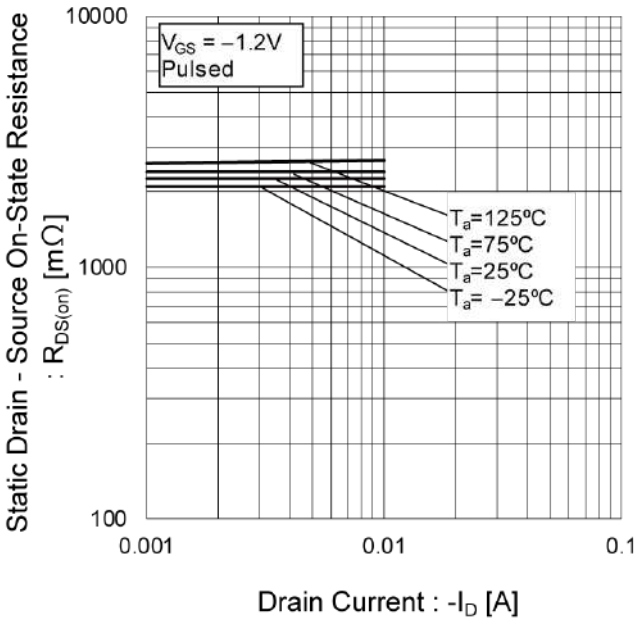

●Electrical characteristic curves

Fig.17 Typical Capacitance vs. Drain - Source Voltage

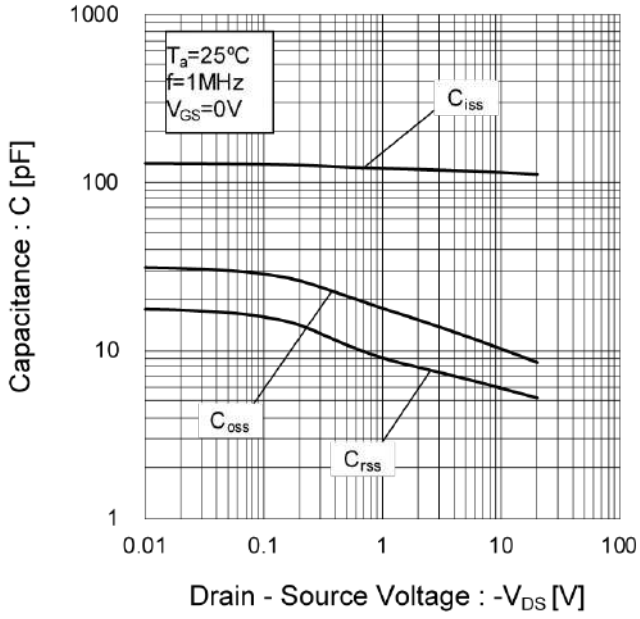

Fig.18 Switching Characteristics

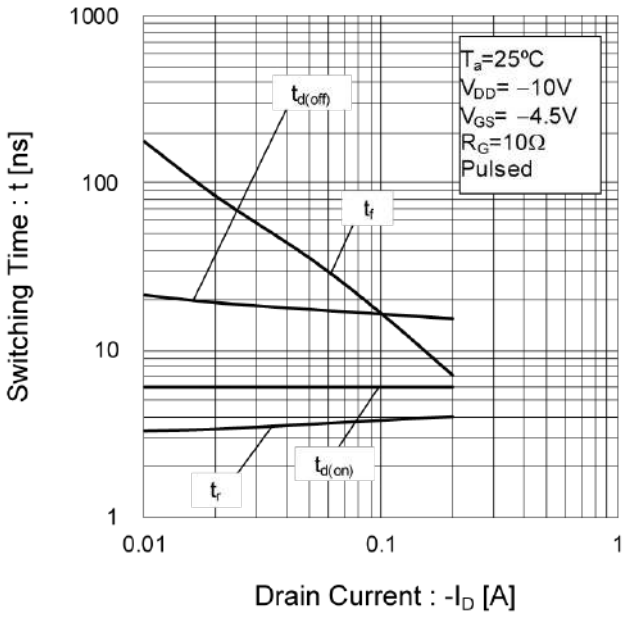

Fig.19 Source Current vs. Source Drain Voltage

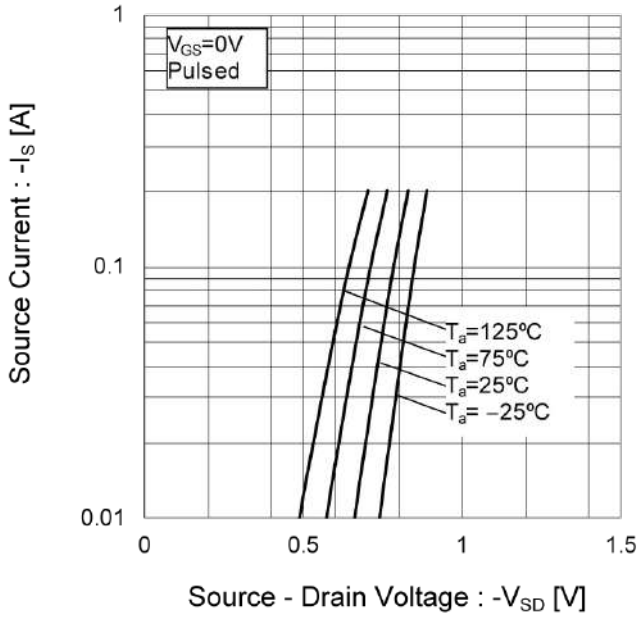

●Measurement circuits

Fig. 1-1 SWITCHING TIME MEASUREMENT CIRCUIT

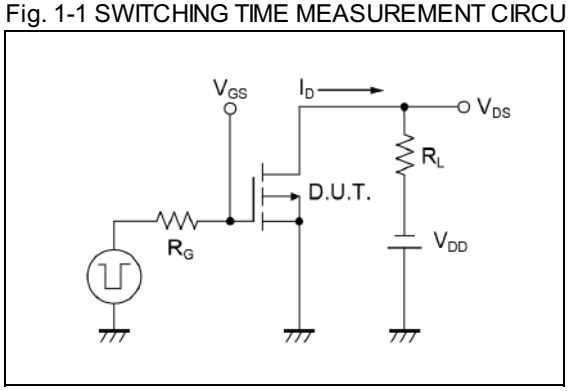

Fig. 1-2 SWITCHING WAVEFORMS

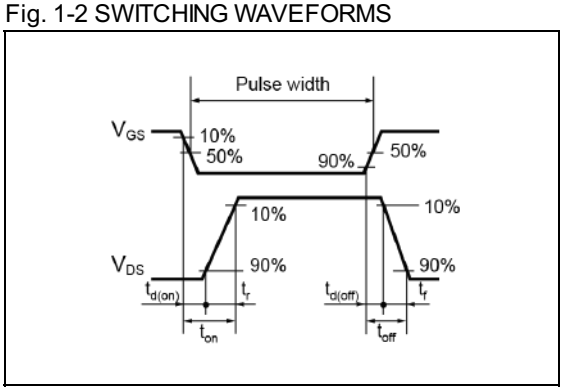

Fig. 2-1 GATE CHARGE MEASUREMENT CIRCUIT

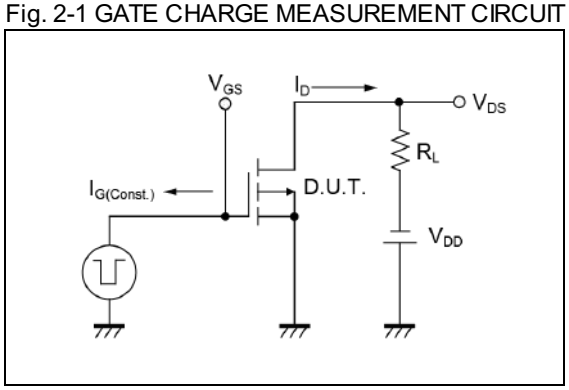

Fig. 2-2 GATE CHARGE WAVEFORM

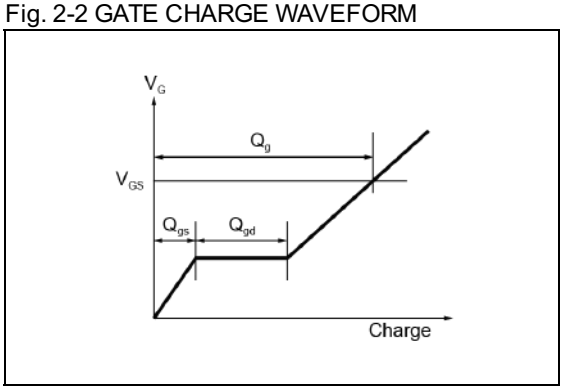

●Dimensions

SOT-723
SC-105AA
(VMT3)

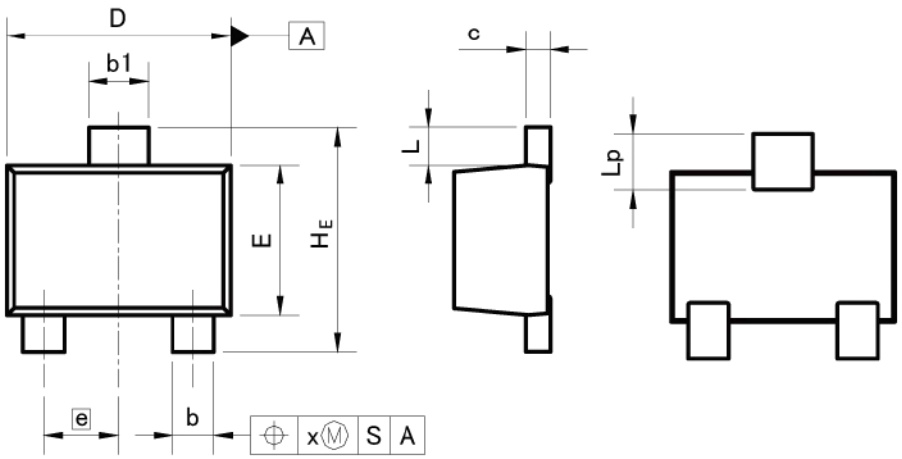

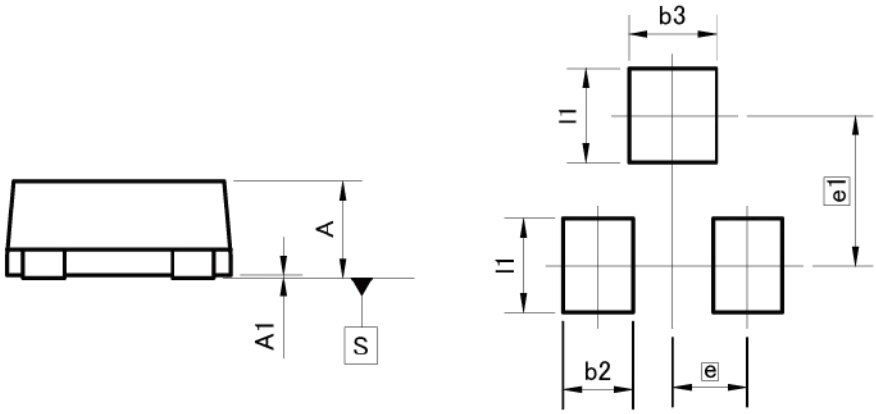

Pattern of terminal position areas
[Not a pattern of soldering pads]

DIM	MILIMETERS		INCHES	
	MIN	MAX	MIN	MAX
A	0.45	0.55	0.018	0.022
A1	0.00	0.10	0.000	0.004
b	0.17	0.27	0.007	0.011
b1	0.27	0.37	0.011	0.015
c	0.08	0.18	0.003	0.007
D	1.10	1.30	0.043	0.051
E	0.70	0.90	0.028	0.035
e	0.40		0.02	
HE	1.10	1.30	0.043	0.051
L	0.10	0.30	0.004	0.012
Lp	0.20	0.40	0.008	0.016
x	–	0.10	–	0.004

DIM	MILIMETERS		INCHES	
	MIN	MAX	MIN	MAX
b2	–	0.37	–	0.015
b3	–	0.47	–	0.019
e1	0.80		0.031	
l1	–	0.50	–	0.020

Dimension in mm/inches

ENTEGRECİ

Bu belge www.entegreci.com üzerinden sunulmaktadır.

Elektronik komponent tedarikinde Entegreci

Entegreci, Eskişehir merkezli, Türkiye geneline satış yapan bir elektronik komponent mağazasıdır. Entegreler (IC), mikrodenetleyiciler, transistörler, diyotlar, pasif elemanlar, konnektörler, modüller ve geliştirme kartları tek adetten seri üretim adetlerine kadar satılır. Ürün sayfalarında güncel stok durumunu, fiyatı ve datasheet bağlantısını bulabilirsiniz.

Parça koduyla arama

Üretici parça numarasını yazın; stok ve fiyatı hemen görün.

www.entegreci.com

Ürün kategorileri

Entegreden kapasitöre tüm elektronik komponent kategorileri.

Kategorilere göz atın

Üreticiler

Aradığınız üreticinin ürünlerini tek sayfada inceleyin.

Üreticileri görün

Toplu alım ve teklif

Listede olmayan ya da yüksek adetli parçalar için teklif isteyin.

Teklif isteyin

www.entegreci.com | **destek@entegreci.com** | **0850 305 90 34**

Entegreci is an online electronic components store based in Türkiye. Search by manufacturer part number to see stock, prices and datasheets for integrated circuits, microcontrollers, transistors, passive components and connectors, or request a quote for parts that are not listed.

Bu sayfa Entegreci tarafından eklenmiştir. Belgenin önceki sayfaları asıl yayıncısına aittir ve içeriği değiştirilmemiştir; en güncel sürüm için belgenin yayıncısına başvurun.