SK3414

20V N-Channel MOSFET

General Description

The SK3414 uses advanced trench technology to provide excellent $R_{DS(ON)}$, low gate charge and operation with gate voltages as low as 1.8V. This device is suitable for use as a load switch or in PWM applications.

BV_{DSS}	$R_{DS(ON),typ.}$	I_D
20V	51mΩ	3A

Features

- V_{DS} = 20V
- I_D = 3A (V_{GS} = 4.5V)
- $R_{DS(ON)}$ < 62mΩ (V_{GS} = 4.5V)
- $R_{DS(ON)}$ < 70mΩ (V_{GS} = 2.5V)
- $R_{DS(ON)}$ < 85mΩ (V_{GS} = 1.8V)

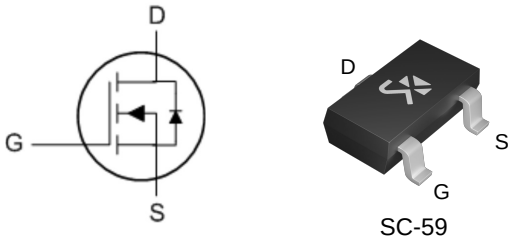

SC-59

Package No to Scale

Ordering Information

Part Number	Package
SK3414	SC-59

Absolute Maximum Ratings

T_A=25℃ unless otherwise specified

Symbol	Parameter		SK3414	Unit
V_{DSS}	Drain-to-Source Voltage		20	V
V_{GSS}	Gate-to-Source Voltage		±8	V
I_D	Continuous Drain Current [1]	T_A= 25℃	3	A
		T_A= 70℃	2.5	A
I_{DM}	Pulsed Drain Current [2]		16	A
P_D	Power Dissipation [1]	T_A= 25℃	1.4	W
	Power Dissipation	T_A= 70℃	0.9	W
T_J & T_{STG}	Operating and Storage Temperature Range		-55 to +150	℃

Caution: Stresses greater than those listed in the "Absolute Maximum Ratings" may cause permanent damage to the device.

Thermal Characteristics

Symbol	Parameter		Typ	Max	Unit
$R_{\theta JA}$	Maximum Junction-to-Ambient [1]	t ≤ 10s	70	90	℃/W
	Maximum Junction-to-Ambient [1]	Steady-State	100	125	
$R_{\theta JL}$	Maximum Junction-to-Lead [3]	Steady-State	63	80	

Electrical Characteristics

OFF Characteristics

T_J =25℃ unless otherwise specified

Symbol	Parameter	Min.	Typ.	Max.	Unit	Test Conditions
BV_{DSS}	Drain-to-Source Breakdown Voltage	20	--	--	V	V_{GS}=0V, I_D=250μA
I_{DSS}	Drain-to-Source Leakage Current	--	--	1	μA	V_{DS}=20V, V_{GS}=0V
		--	--	5	μA	T_J=55°C
I_{GSS}	Gate-to-Source Leakage Current	--	--	+100	nA	V_{GS}=+8V, V_{DS}=0V
		--	--	-100		V_{GS}=-8V, V_{DS}=0V

ON Characteristics

T_J =25℃ unless otherwise specified

Symbol	Parameter	Min.	Typ.	Max.	Unit	Test Conditions
$R_{DS(ON)}$	Static Drain-to-Source On-Resistance	--	51	62	mΩ	V_{GS}=4.5V, I_D=3A
		--	68	85	mΩ	T_J=125°C
		--	58	70	mΩ	V_{GS}=2.5V, I_D=2.8A
		--	68	85	mΩ	V_{GS}=1.8V, I_D=2.5A
$V_{GS(TH)}$	Gate Threshold Voltage	0.4	0.7	1.0	V	V_{DS}=V_{GS}, I_D=250μA
$I_{D(ON)}$	On state drain current	16	--	--	A	V_{GS}=4.5V, V_{DS}=5V
gfs	Forward Transconductance	--	11	--	S	V_{DS}=5V,I_D=3A

Dynamic Characteristics

Essentially independent of operating temperature

Symbol	Parameter	Min.	Typ.	Max.	Unit	Test Conditions
Rg	Gate Resistance	--	3	4.5	Ω	V_{GS}=0V, V_{DS}=0V, f=1MHz
C_{iss}	Input Capacitance	--	260	320	pF	V_{GS}=0V, V_{DS}=10V, f=1MHz
C_{rss}	Reverse Transfer Capacitance	--	27	--		
C_{oss}	Output Capacitance	--	48	--		
Q_g	Total Gate Charge	--	2.9	3.8	nC	V_{DS}=10V, I_D=3A, V_{GS}=4.5V
Q_{gs}	Gate-to-Source Charge	--	0.4	--		
Q_{gd}	Gate-to-Drain (Miller) Charge	--	0.6	--		

Resistive Switching Characteristics

Essentially independent of operating temperature

Symbol	Parameter	Min.	Typ.	Max.	Unit	Test Conditions
$t_{d(ON)}$	Turn-on Delay Time	--	2.5	--	ns	V_{GS}=5V, V_{DS}=10V, R_L=3.3Ω, R_{GEN}=6Ω
t_{rise}	Rise Time	--	3.2	--		
$t_{d(OFF)}$	Turn-Off Delay Time	--	21	--		
t_{fall}	Fall Time	--	3	--		

Source-Drain Body Diode Characteristics

T_J=25℃ unless otherwise specified

Symbol	Parameter	Min	Typ.	Max.	Unit	Test Conditions
I_{SD}	Continuous Source Current	--	--	2	A	Integral pn-diode in MOSFET
V_{SD}	Diode Forward Voltage	--	0.7	1	V	T_J=25℃, I_S=1A, V_{GS}=0V
t_{rr}	Reverse Recovery Time	--	14	19	ns	T_J=25℃ I_F=3A, di/dt=100A/μs
Q_{rr}	Reverse Recovery Charge	--	3.8	--	nC	T_J=25℃ I_F=3A, di/dt=100A/μs

Note: [1]The value of $R_{\theta JA}$ is measured with the device mounted on 1 in ^{2} FR-4 board with 2oz. copper, in a still air environment with T_A=25℃. The value in any given application depends on the user's specific board design. The current rating is based on the t ≤ 10s thermal resistance rating.

[2]Repetitive rating, pulse width limited by junction temperature.

[3]The $R_{\theta JA}$ is the sum of the thermal impedence from junction to lead $R_{\theta JL}$ and lead to ambient.

[4]The static characteristics in Figures 1 to 6 are obtained using <300 μs pulses, duty cycle 0.5% max.

[5]These tests are performed with the device mounted on 1 in ^{2} FR-4 board with 2oz. Copper, in a still air environment with T_A=25℃. The SOA curve provides a single pulse rating.

Typical Characteristics

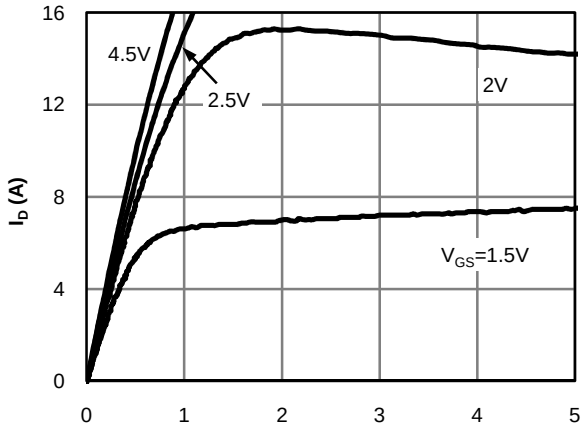

Figure 1: On-Region Characteristics

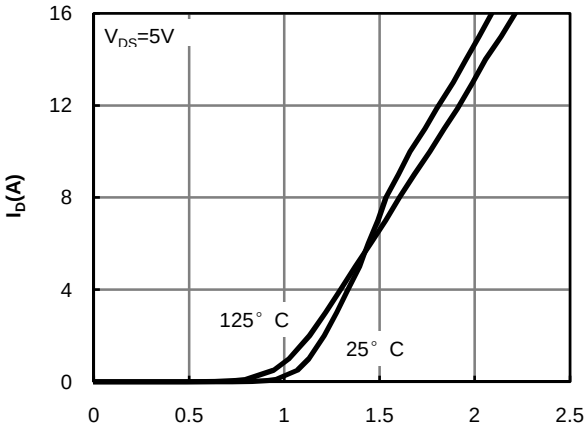

Figure 2: Transfer Characteristics

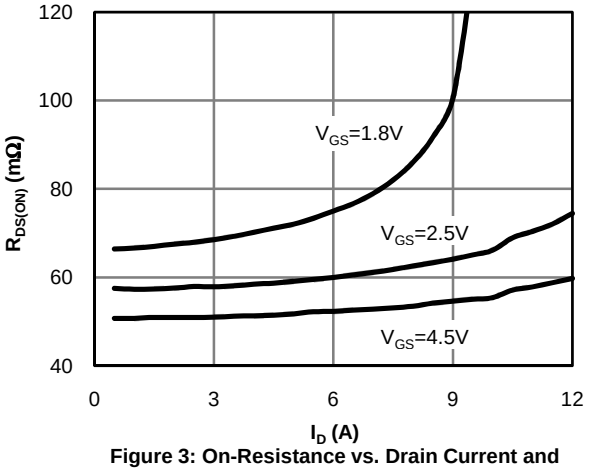

Figure 3: On-Resistance vs. Drain Current and Gate Voltage

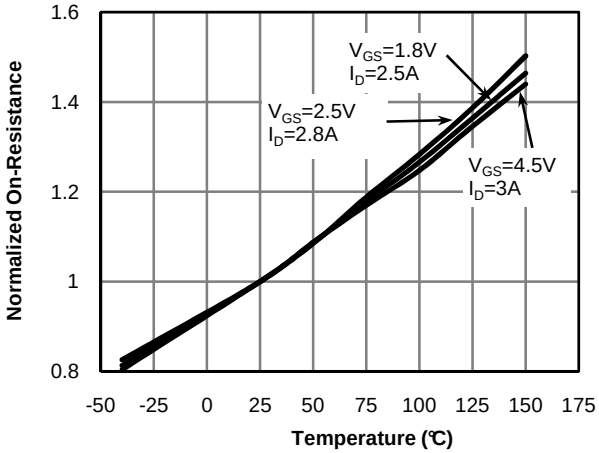

Figure 4: On-Resistance vs. Junction Temperature

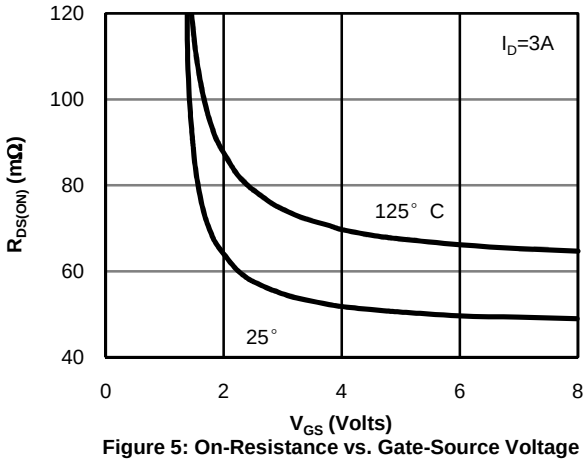

Figure 5: On-Resistance vs. Gate-Source Voltage

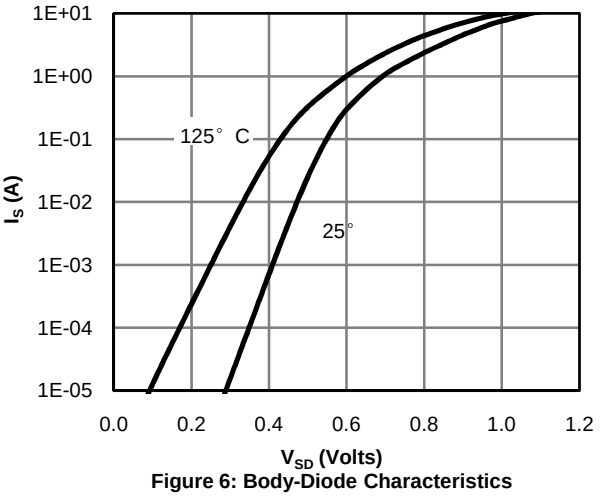

Figure 6: Body-Diode Characteristics

Typical Characteristics

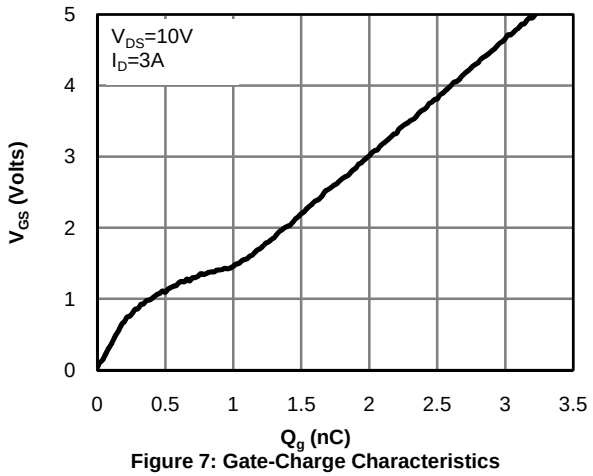

Figure 7: Gate-Charge Characteristics

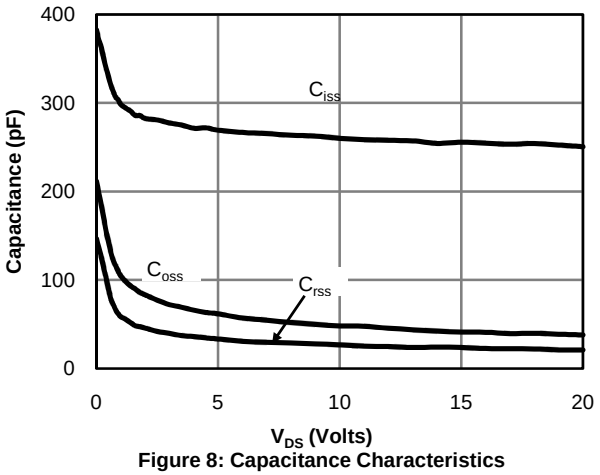

Figure 8: Capacitance Characteristics

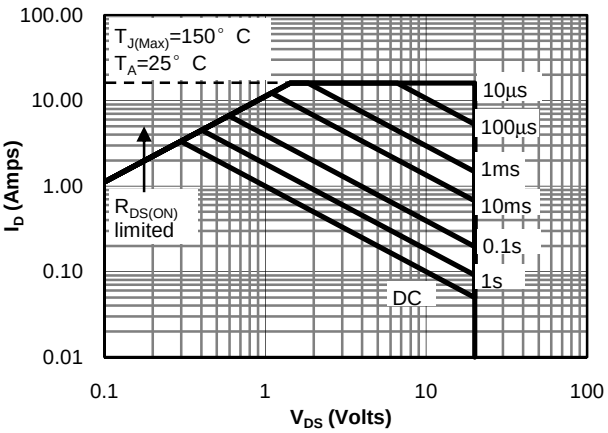

Figure 9: Maximum Forward Biased Safe Operating Area (Note E)

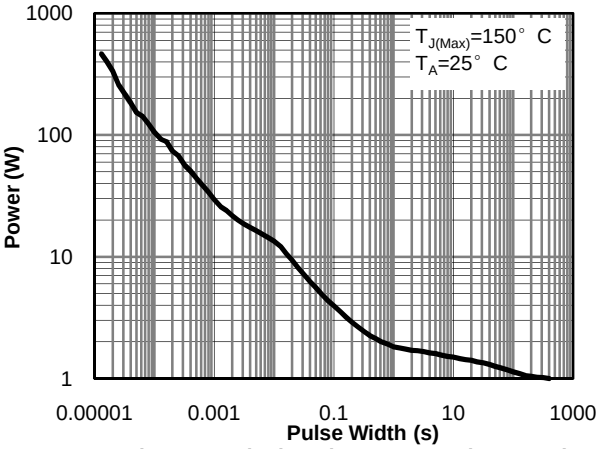

Figure 10: Single Pulse Power Rating Junction-to-Ambient (Note E)

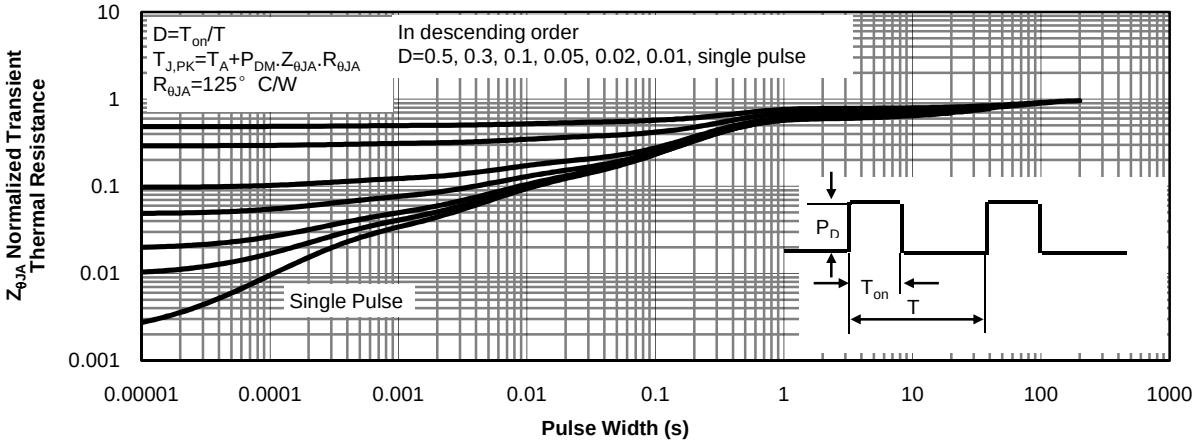

Figure 11: Normalized Maximum Transient Thermal Impedance (Note E)

Typical Characteristics

Gate Charge Test Circuit & Waveform

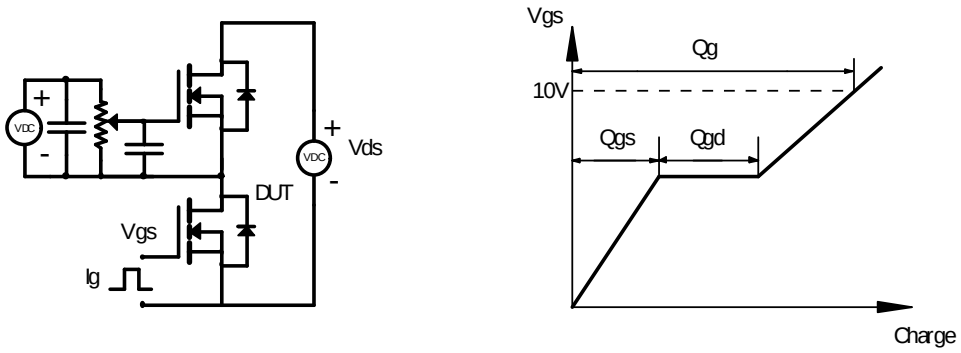

Resistive Switching Test Circuit & Waveforms

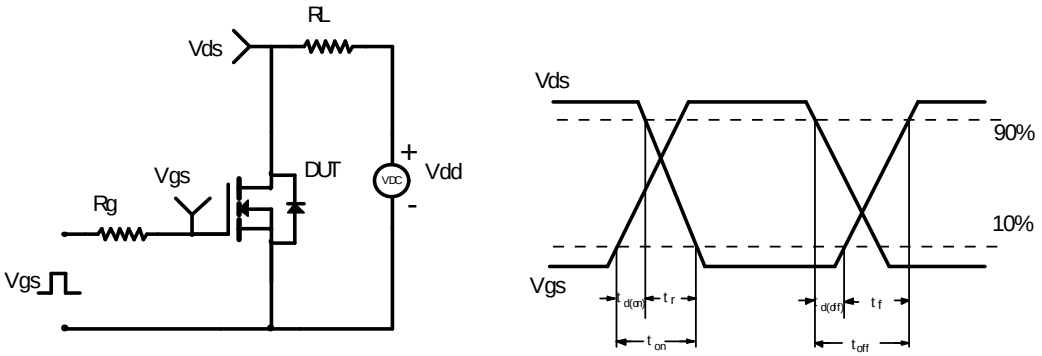

Unclamped Inductive Switching (UIS) Test Circuit & Waveforms

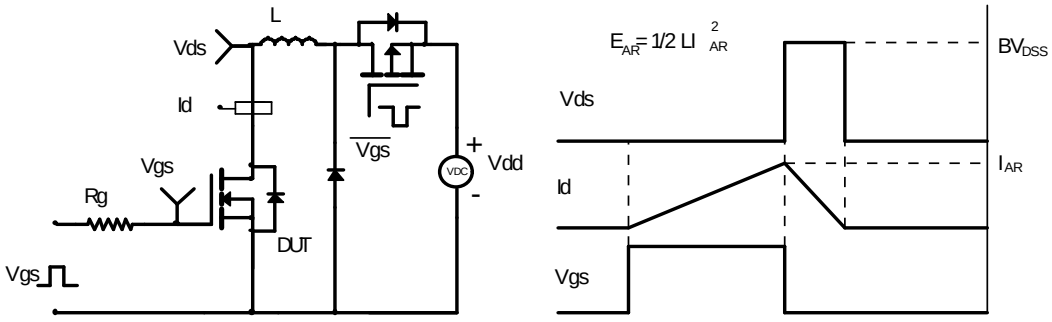

Diode Recovery Test Circuit & Waveforms

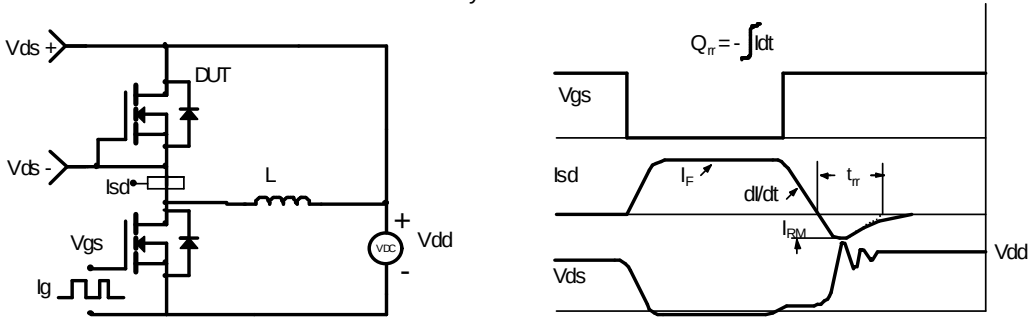

Package Outline

SC-59

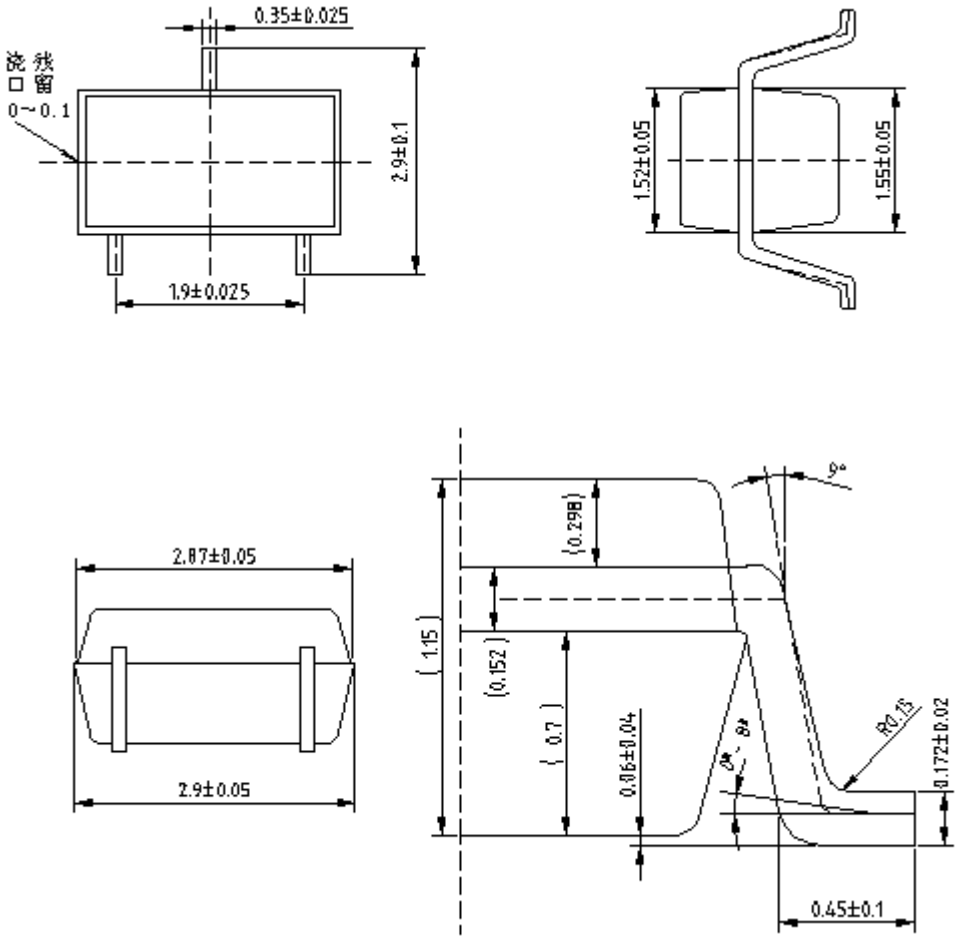

ENTEGRECİ

Bu belge www.entegreci.com üzerinden sunulmaktadır.

Elektronik komponent tedarikinde Entegreci

Entegreci, Eskişehir merkezli, Türkiye geneline satış yapan bir elektronik komponent mağazasıdır. Entegreler (IC), mikrodenetleyiciler, transistörler, diyotlar, pasif elemanlar, konnektörler, modüller ve geliştirme kartları tek adetten seri üretim adetlerine kadar satılır. Ürün sayfalarında güncel stok durumunu, fiyatı ve datasheet bağlantısını bulabilirsiniz.

Parça koduyla arama

Üretici parça numarasını yazın; stok ve fiyatı hemen görün.

www.entegreci.com

Ürün kategorileri

Entegreden kapasitöre tüm elektronik komponent kategorileri.

Kategorilere göz atın

Üreticiler

Aradığınız üreticinin ürünlerini tek sayfada inceleyin.

Üreticileri görün

Toplu alım ve teklif

Listede olmayan ya da yüksek adetli parçalar için teklif isteyin.

Teklif isteyin

www.entegreci.com | **destek@entegreci.com** | **0850 305 90 34**

Entegreci is an online electronic components store based in Türkiye. Search by manufacturer part number to see stock, prices and datasheets for integrated circuits, microcontrollers, transistors, passive components and connectors, or request a quote for parts that are not listed.

Bu sayfa Entegreci tarafından eklenmiştir. Belgenin önceki sayfaları asıl yayıncısına aittir ve içeriği değiştirilmemiştir; en güncel sürüm için belgenin yayıncısına başvurun.