SK05N10A

N-Channel MOSFET

BV_{DSS},T_A=25℃	$R_{DS(ON)}$,typ@10V	I_D,T_A=25℃
100V	135mΩ	5A

Features

- High density cell design for ultra low $R_{DS(ON)}$
- Fully characterized avalanche voltage and current
- Excellent package for good heat dissipation



SC-59

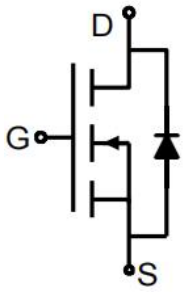

Applications

- Power switching application
- Hard switched and high frequency circuits
- Uninterruptible power supply

Description

The SK05N10A uses advanced trench technology and design to provide excellent $R_{DS(ON)}$ with low gate charge. It can be used in a wide variety of applications.

Absolute Maximum Ratings(T_A=25℃,unless otherwise noted.)

Parameter	Symbol	Limit	Unit
Drain-source Voltage	V_{DS}	100	V
Gate-source Voltage	V_{GS}	±20	V
Drain Current-Continuous	I_D	5	A
Drain Current-Pulsed(1)	I_{DM}	20	A
Maximum Power Dissipation	P_D	3	W
Operating Junction and Storage Temperature Range	T_J,T_{STG}	-55~+150	℃
Thermal Resistance,Junction-to-Ambient(2)	$R_{\theta JA}$	41.7	℃/W

Electrical Characteristics(T_A=25℃,unless otherwise noted.)

Parameter	Symbol	Condition	Min	Typ	Max	Unit
Off Characteristics						
Drain-source breakdown voltage	BV_{DSS}	V_{GS}=0V,I_D=250μA	100	105		V
Drain-source leakage current	I_{DSS}	V_{DS}=80V,V_{GS}=0V			800	nA

Gate-source leakage current	I_{GSS}	V_{DS}=0V,V_{GS}=±20V			±30	μA
On Characteristics(3)						
Gate Threshold voltage	$V_{GS(th)}$	V_{DS}=V_{GS},I_D=250μA	1	2	3	V
Drain-source on resistance	$R_{DS(on)}$	V_{GS}=10V,I_D=5A		135	150	mΩ
Forward Trans conductance	g_{FS}	V_{DS}=5V,I_D=2.9A		8		S
Dynamic Characteristics(4)						
Input Capacitance	C_{iss}	V_{DS}=25V,V_{GS}=0V, F=1.0MHz		690		pF
Output capacitance	C_{oss}			120		pF
Revers Transfer capacitance	C_{rss}			90		pF
Switching Characteristics(4)						
Turn-on Delay Time	$t_{d(on)}$	V_{DS}=30V,V_{GS}=10V, R_L=15Ω,R_G=2.5Ω, I_D=2A		11		nS
Turn-on Rise Time	t_r			7.4		nS
Turn-off Delay Time	$t_{d(off)}$			35		nS
Turn-off Fall Time	t_f			9.1		nS
Total Gate Charge	Q_g	V_{DS}=30V,I_D=3A, V_{GS}=10V		15.5		nC
Gate-Source Charge	Q_{gs}			3.2		nC
Gate-Drain Charge	Q_{gd}			4.7		nC
Drain-Source Diode Characteristics						
Diode Forward Voltage(3)	V_{SD}	V_{GS}=0V,I_D=6A			1.2	V
Diode Forward Current(2)	I_S				6	A

Notes:

1.Repetitive Rating: Pulse width limited by maximum junction temperature.

2.Surface Mounted on FR4 Board, t ≤ 10 sec.

3.Pulse Test: Pulse Width ≤ 300μs, Duty Cycle ≤ 2%.

4.Guaranteed by design, not subject to production

Test Circuit

1) E_{AS} test circuit

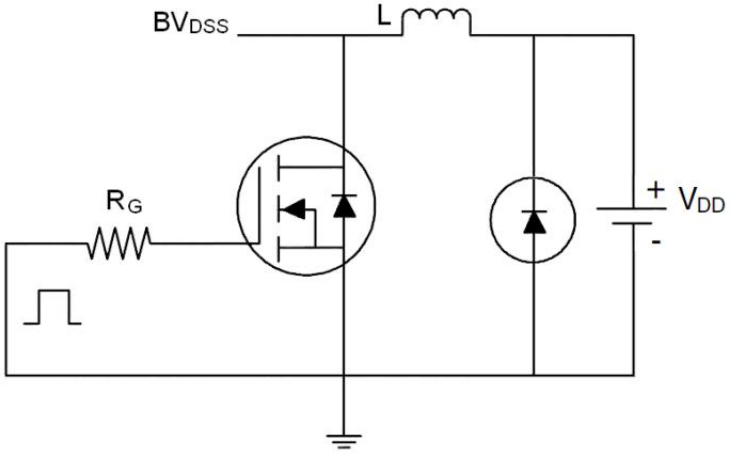

2) Gate charge test circuit

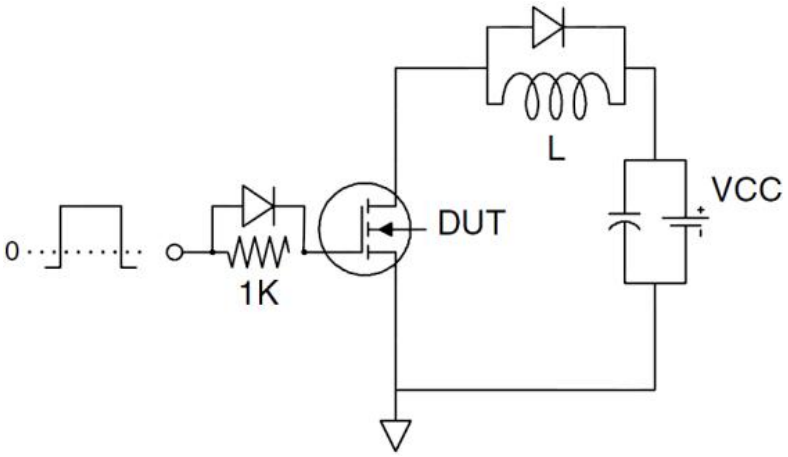

3) Switch time test circuit

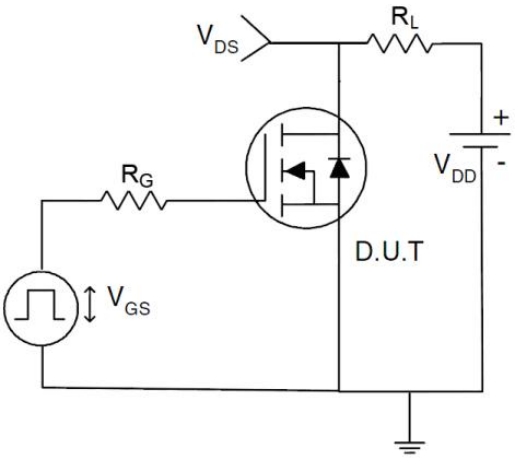

Typical Characteristics

Figure1. Source-Drain Diode Forward Voltage

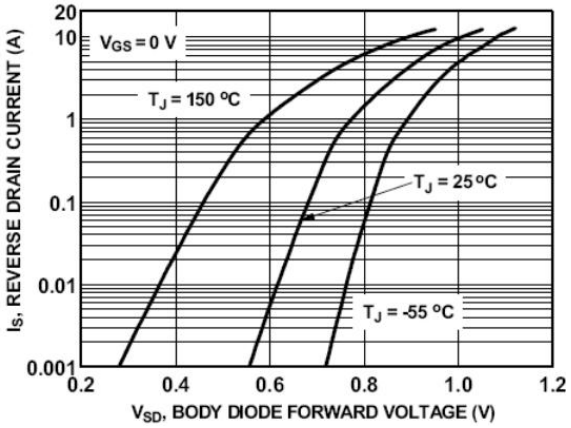

Figure2. Safe operating area

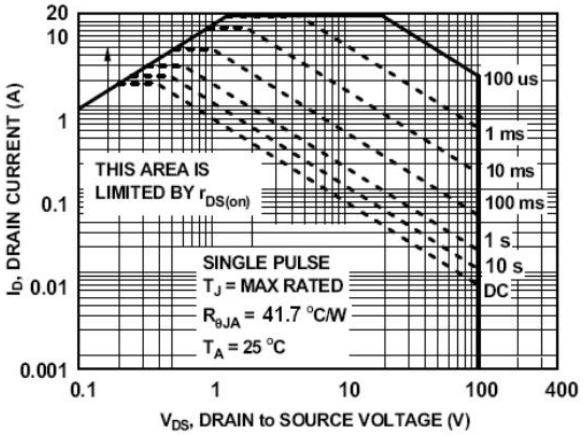

Figure3. Output characteristics

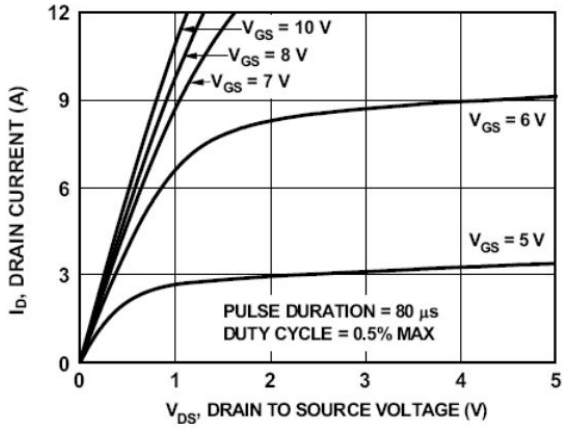

Figure4. Transfer characteristics

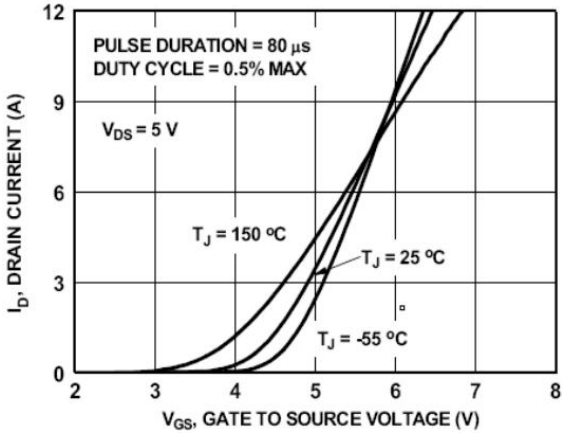

Figure5. Static drain-source on resistance

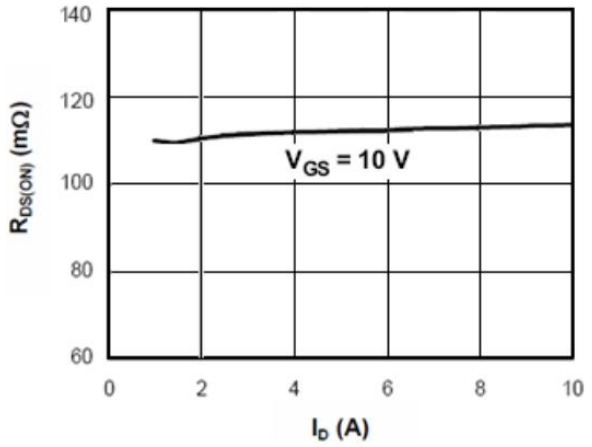

Figure6. $R_{DS(ON)}$ vs Junction Temperature

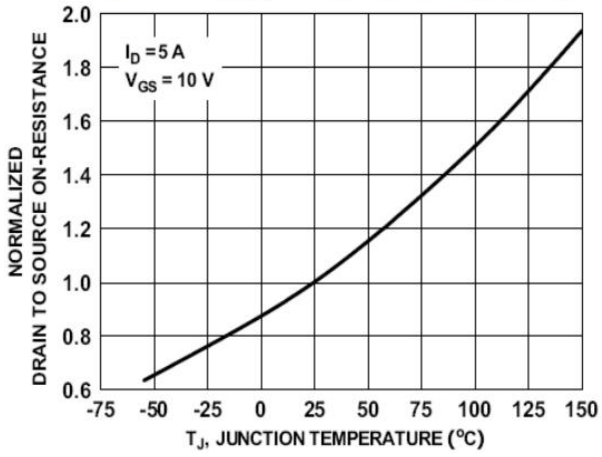

Figure7. BV_{DSS} vs Junction Temperature

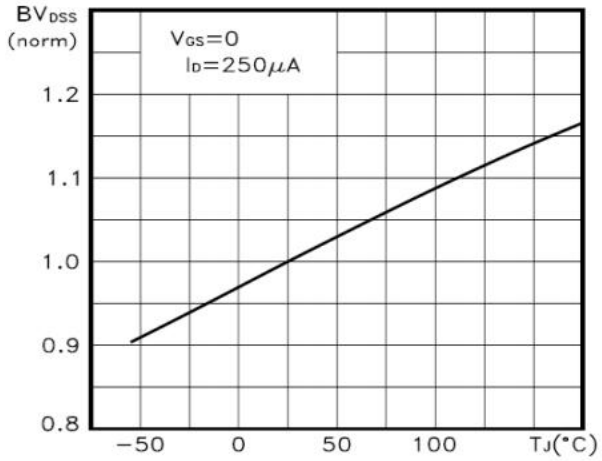

Figure8. $V_{GS(th)}$ vs Junction Temperature

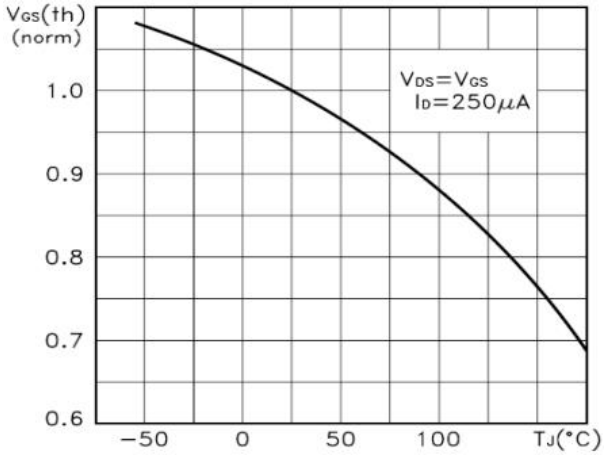

Figure9. Gate charge waveforms

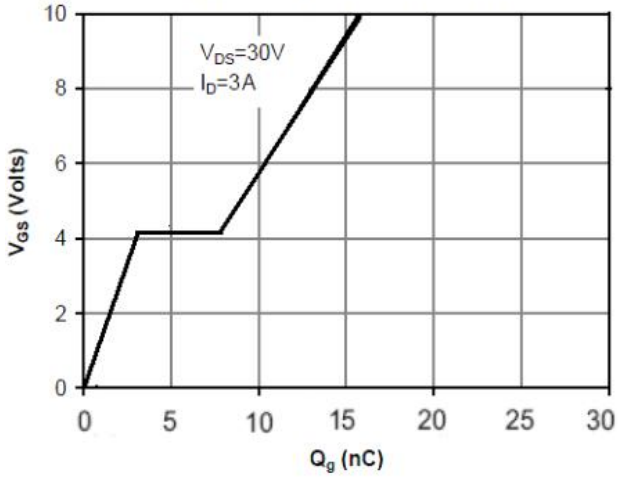

Figure10. Capacitance

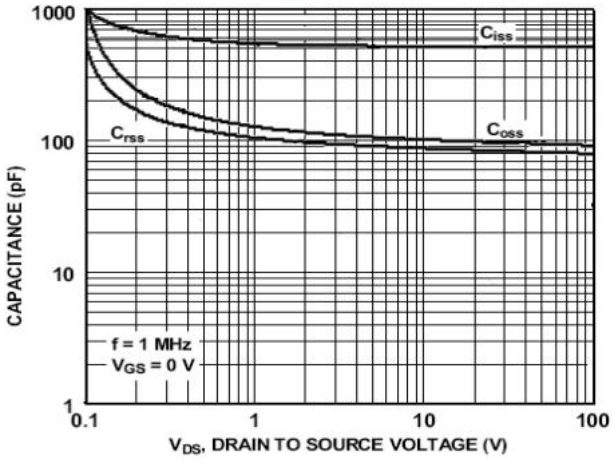

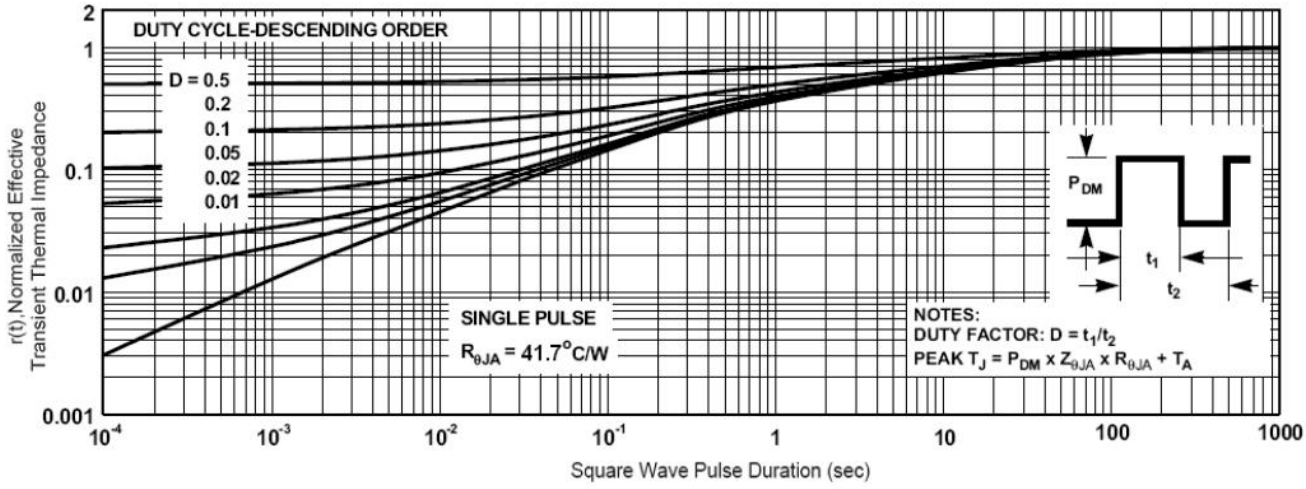

Figure11. Normalized Maximum Transient Thermal Impedance

Package Information

SC-59

Dimensions in mm

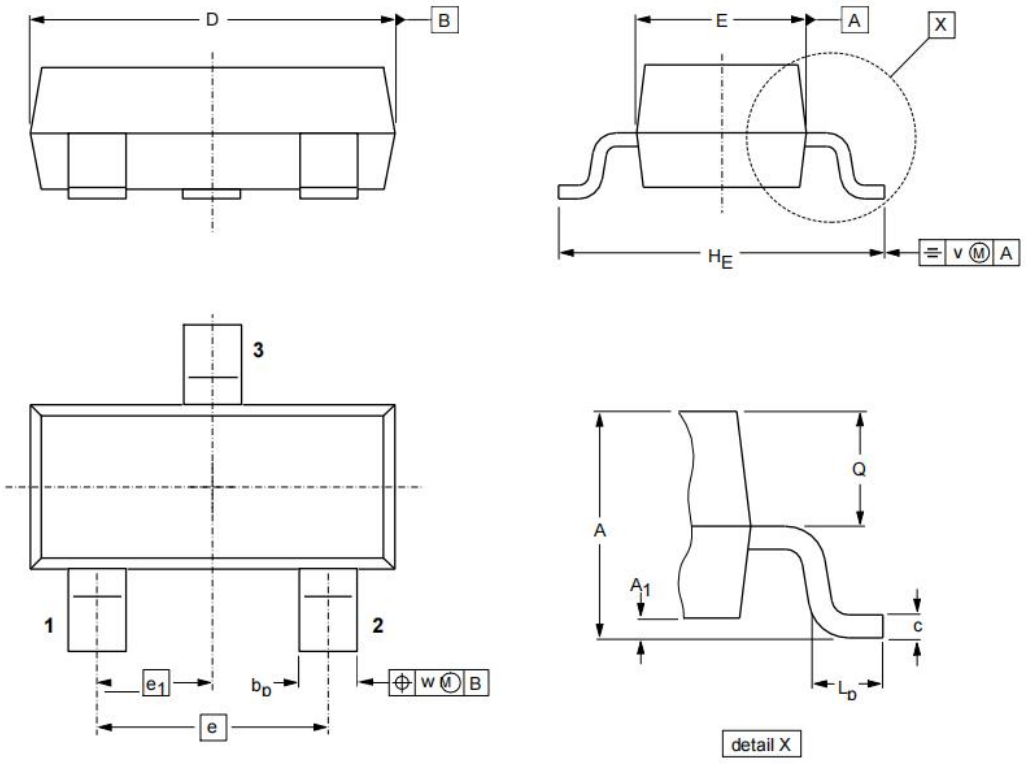

DIMENSIONS

Unit	A	A1 Max.	b_p	c	D	E	e	e_1	H_E	L_p	Q	v	w
mm	1.1 0.9	0.1	0.48 0.38	0.15 0.09	3.0 2.8	1.7 1.5	1.9	0.95	3.00 2.65	0.45 0.15	0.55 0.45	0.2	0.1

Shikues Disclaimer

1.Accuracy of Information and Right to Modify

The information provided in this document is for reference only. Shikues reserves the right to make changes to this document and to the specifications of the products described herein at any time, without prior notice, for the purpose of improving reliability, function, design, or for any other reason. It is the customer's responsibility to obtain and verify the latest product information and specifications before making any final design, procurement, or usage decisions.

2.No Warranty

Shikues makes no express or implied warranties, representations, or guarantees regarding the suitability of its products for any particular purpose.

Shikues assumes no liability for any assistance provided or for the design of customer products. All products are supplied "as is."

3.Intended Use and Limitation of Liability

The products described in this document are intended for use in general-purpose electronic devices. They are neither designed nor tested nor authorized for use in transportation equipment or applications requiring high reliability. Unless expressly authorized in writing by Shikues, these products must not be used as critical components in life-support systems or any applications where failure could directly pose a risk to human life (including, but not limited to, medical devices, transportation systems, aerospace equipment, nuclear facilities, and safety-critical systems).

Shikues assumes no responsibility or liability for any consequences arising from the use of its products in unauthorized or unintended applications.

Neither Shikues nor its representatives shall be held liable for any resulting damages.

4.Intellectual Property

This document does not grant any express or implied license—whether by estoppel, implication, or otherwise—to use any intellectual property rights of Shikues.

ENTEGRECİ

Bu belge www.entegreci.com üzerinden sunulmaktadır.

Elektronik komponent tedarikinde Entegreci

Entegreci, Eskişehir merkezli, Türkiye geneline satış yapan bir elektronik komponent mağazasıdır. Entegreler (IC), mikrodenetleyiciler, transistörler, diyotlar, pasif elemanlar, konnektörler, modüller ve geliştirme kartları tek adetten seri üretim adetlerine kadar satılır. Ürün sayfalarında güncel stok durumunu, fiyatı ve datasheet bağlantısını bulabilirsiniz.

Parça koduyla arama

Üretici parça numarasını yazın; stok ve fiyatı hemen görün.

www.entegreci.com

Ürün kategorileri

Entegreden kapasitöre tüm elektronik komponent kategorileri.

Kategorilere göz atın

Üreticiler

Aradığınız üreticinin ürünlerini tek sayfada inceleyin.

Üreticileri görün

Toplu alım ve teklif

Listede olmayan ya da yüksek adetli parçalar için teklif isteyin.

Teklif isteyin

www.entegreci.com | **destek@entegreci.com** | **0850 305 90 34**

Entegreci is an online electronic components store based in Türkiye. Search by manufacturer part number to see stock, prices and datasheets for integrated circuits, microcontrollers, transistors, passive components and connectors, or request a quote for parts that are not listed.

Bu sayfa Entegreci tarafından eklenmiştir. Belgenin önceki sayfaları asıl yayıncısına aittir ve içeriği değiştirilmemiştir; en güncel sürüm için belgenin yayıncısına başvurun.