Micro Commercial Components

Micro Commercial Components
20736 Marilla Street Chatsworth
CA 91311
Phone: (818) 701-4933
Fax: (818) 701-4939

SI3420

N-Channel Enhancement Mode Field Effect Transistor

Features

- High dense cell design for extremely low $R_{DS(ON)}$
- Rugged and reliable
- Lead free product is acquired
- SOT-23 Package
- Marking Code: R20
- Epoxy meets UL 94 V-0 flammability rating
- Moisture Sensitivity Level 1
- Halogen free available upon request by adding suffix "-HF"

Maximum Ratings @ 25°C Unless Otherwise Specified

Symbol	Parameter	Rating	Unit
V_{DS}	Drain-source Voltage	20	V
I_D	Drain Current-Continuous	6	A
I_{DM}	Drain Current-Pulsed [a]	25	A
V_{GS}	Gate-source Voltage	±12	V
P_D	Total Power Dissipation	0.35	W
$R_{\theta JA}$	Thermal Resistance Junction to Ambient[b]	357	℃/W
T_J	Operating Junction Temperature	-55 to +150	℃
T_{STG}	Storage Temperature	-55 to +150	℃

Internal Structure and Marking Code

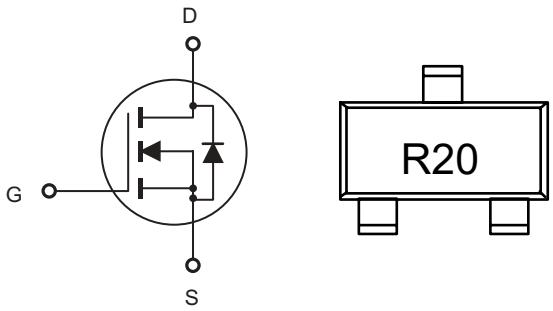

SOT-23

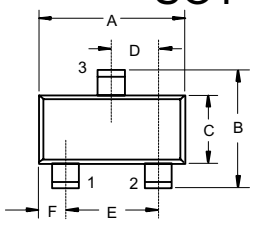

1.GATE
2. SOURCE
3. DRAIN

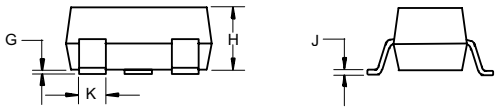

DIMENSIONS					
	INCHES		MM		
DIM	MIN	MAX	MIN	MAX	NOTE
A	.110	.120	2.80	3.04	
B	.083	.104	2.10	2.64	
C	.047	.055	1.20	1.40	
D	.035	.041	.89	1.03	
E	.070	.081	1.78	2.05	
F	.018	.024	.45	.60	
G	.0005	.0039	.013	.100	
H	.035	.044	.89	1.12	
J	.003	.007	.085	.180	
K	.015	.020	.37	.51	

Suggested Solder Pad Layout

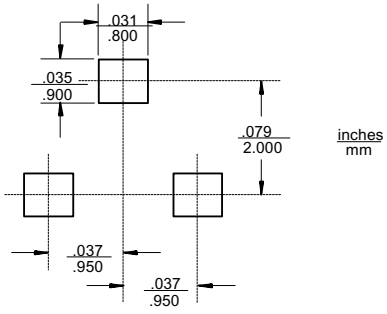

Electrical Characteristics T_A = 25°C unless otherwise noted

Parameter	Symbol	Test Condition	Min	Typ	Max	Units
STATIC PARAMETERS						
Drain-source breakdown voltage	$V_{(BR)DSS}$	V_{GS} = 0V, I_D =250μA	20			V
Zero gate voltage drain current	I_{DSS}	V_{DS} =16V,V_{GS} = 0V			1	u A
Gate-body leakage current	I_{GSS}	V_{GS} =±12V, V_{DS} = 0V			±100	nA
Gate threshold voltage	$V_{GS(th)}$	V_{DS} =V_{GS}, I_D =250μA	0.5	0.7	3	V
Drain-source on-state resistance	$R_{DS(on)}$	V_{GS} =10V, I_D =6.0A		19	24	mΩ
		V_{GS} =4.5V, I_D =5.0A		22	27	mΩ
		V_{GS} =2.5V, I_D =4.0A		35	42	mΩ
		V_{GS} =1.8V, I_D =2.0A			74	mΩ
Forward tranconductance	g_{FS}	V_{DS} =5V, I_D =3.8A	4			S
Diode forward voltage	V_{SD}	V_{GS} =0 V, I_S =1.0A		0.75	1	V
DYNAMIC PARAMETERS*						
Input capacitance	C_{iss}	V_{DS} =10V,V_{GS} =0V,f =1MHz		630		pF
Output capacitance	C_{oss}			164		pF
Reverse transfer capacitance	C_{rss}			137		pF
Gate resistance	R_g	V_{DS} =0V,V_{GS} =0V,f =1MHz		1.5		Ω
SWITCHING PARAMETERS*						
Turn-on delay time	$t_{d(on)}$	V_{GS}=5V,V_{DS}=10V, R_L=1.7Ω,R_{GEN}=6Ω		5.5		ns
Turn-on rise time	t_r			14		ns
Turn-off delay time	$t_{d(off)}$			29		ns
Turn-off fall time	t_f			10.2		ns

* These parameters have no way to verify.

Output Characteristics

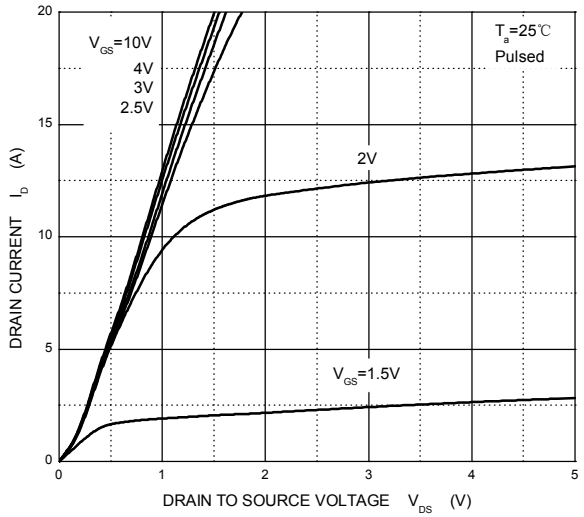

Transfer Characteristics

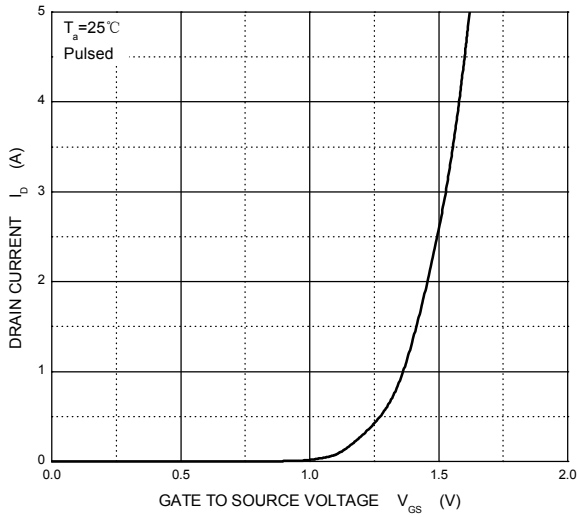

$R_{DS(ON)}$ — I_D

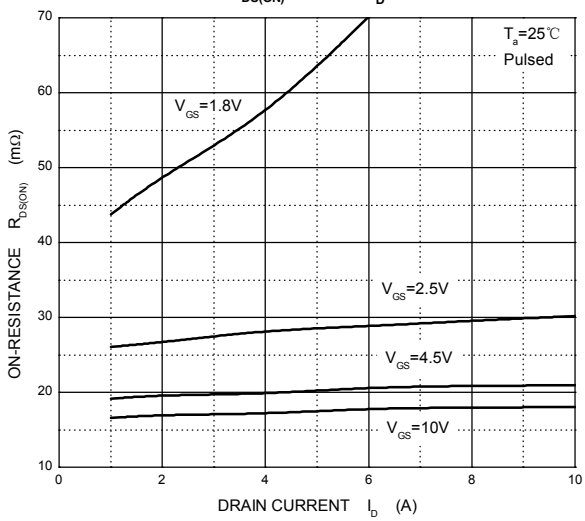

$R_{DS(ON)}$ — V_{GS}

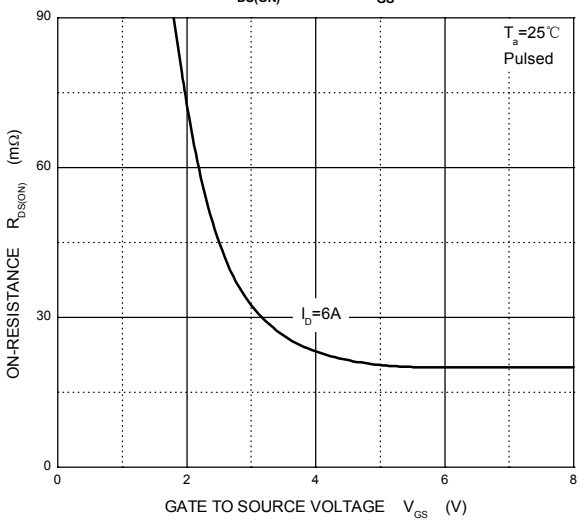

I_S — V_{SD}

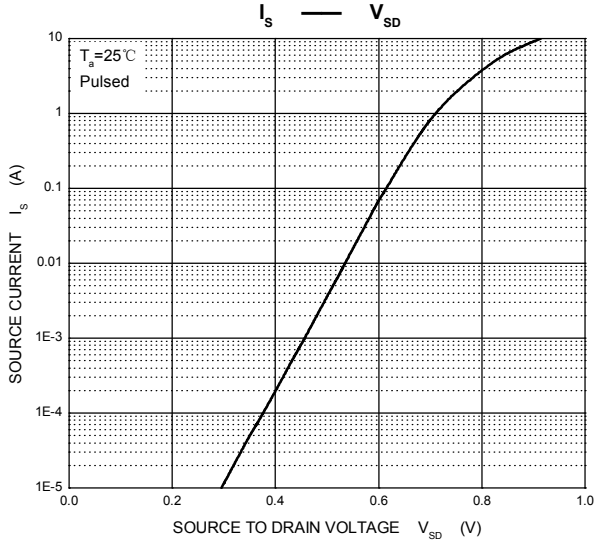

Micro Commercial Components

Ordering Information :

Device	Packing
Part Number-TP	Tape&Reel: 3Kpcs/Reel

Note : Adding "-HF" suffix for halogen free, eg. Part Number-TP-HF

*****IMPORTANT NOTICE*****

Micro Commercial Components Corp. reserves the right to make changes without further notice to any product herein to make corrections, modifications , enhancements , improvements , or other changes . ***Micro Commercial Components Corp .*** does not assume any liability arising out of the application or use of any product described herein; neither does it convey any license under its patent rights ,nor the rights of others . The user of products in such applications shall assume all risks of such use and will agree to hold ***Micro Commercial Components Corp .*** and all the companies whose products are represented on our website, harmless against all damages.

*****LIFE SUPPORT*****

MCC's products are not authorized for use as critical components in life support devices or systems without the express written approval of Micro Commercial Components Corporation.

*****CUSTOMER AWARENESS*****

Counterfeiting of semiconductor parts is a growing problem in the industry. Micro Commercial Components (MCC) is taking strong measures to protect ourselves and our customers from the proliferation of counterfeit parts. MCC strongly encourages customers to purchase MCC parts either directly from MCC or from Authorized MCC Distributors who are listed by country on our web page cited below. Products customers buy either from MCC directly or from Authorized MCC Distributors are genuine parts, have full traceability, meet MCC's quality standards for handling and storage. **MCC will not provide any warranty coverage or other assistance for parts bought from Unauthorized Sources.** MCC is committed to combat this global problem and encourage our customers to do their part in stopping this practice by buying direct or from authorized distributors.

ENTEGRECİ

Bu belge www.entegreci.com üzerinden sunulmaktadır.

Elektronik komponent tedarikinde Entegreci

Entegreci, Eskişehir merkezli, Türkiye geneline satış yapan bir elektronik komponent mağazasıdır. Entegreler (IC), mikrodenetleyiciler, transistörler, diyotlar, pasif elemanlar, konnektörler, modüller ve geliştirme kartları tek adetten seri üretim adetlerine kadar satılır. Ürün sayfalarında güncel stok durumunu, fiyatı ve datasheet bağlantısını bulabilirsiniz.

Parça koduyla arama

Üretici parça numarasını yazın; stok ve fiyatı hemen görün.

www.entegreci.com

Ürün kategorileri

Entegreden kapasitöre tüm elektronik komponent kategorileri.

Kategorilere göz atın

Üreticiler

Aradığınız üreticinin ürünlerini tek sayfada inceleyin.

Üreticileri görün

Toplu alım ve teklif

Listede olmayan ya da yüksek adetli parçalar için teklif isteyin.

Teklif isteyin

www.entegreci.com | **destek@entegreci.com** | **0850 305 90 34**

Entegreci is an online electronic components store based in Türkiye. Search by manufacturer part number to see stock, prices and datasheets for integrated circuits, microcontrollers, transistors, passive components and connectors, or request a quote for parts that are not listed.

Bu sayfa Entegreci tarafından eklenmiştir. Belgenin önceki sayfaları asıl yayıncısına aittir ve içeriği değiştirilmemiştir; en güncel sürüm için belgenin yayıncısına başvurun.