www.ablic.com

BATTERY MONITORING IC FOR 1-CELL PACK

© ABLIC Inc., 2015-2019

Rev.1.1_02

The S-8259A Series is an IC including high-accuracy voltage detection circuits and delay circuits.
The S-8259A Series is suitable for monitoring overcharge and overdischarge for 1-cell lithium-ion / lithium polymer rechargeable battery packs.

■ Features

- High-accuracy voltage detection circuit

Overcharge detection voltage	3.500 V to 4.600 V (5 mV step)	Accuracy ±20 mV
Overcharge release voltage	3.100 V to 4.600 V*1	Accuracy ±50 mV
Overdischarge detection voltage	2.000 V to 3.400 V (10 mV step)	Accuracy ±50 mV
Overdischarge release voltage	2.000 V to 3.400 V*2	Accuracy ±100 mV

- Detection delay times are generated only by an internal circuit (external capacitors are unnecessary).
- CO pin output logic: Active "H", active "L"
- Wide operation temperature range: Ta = −40°C to +85°C
- Low current consumption
  - During operation: 1.5 µA typ., 3.0 µA max. (Ta = +25°C)
  - During overdischarge: 2.0 µA max. (Ta = +25°C)
- Lead-free (Sn 100%), halogen-free

***1.** Overcharge release voltage = Overcharge detection voltage − Overcharge hysteresis voltage
(Overcharge hysteresis voltage can be selected from a range of 0 V to 0.4 V in 50 mV step.)
***2.** Overdischarge release voltage = Overdischarge detection voltage + Overdischarge hysteresis voltage
(Overdischarge hysteresis voltage can be selected from a range of 0.1 V to 0.7 V in 100 mV step.)

■ Applications

- Lithium-ion rechargeable battery pack
- Lithium polymer rechargeable battery pack

■ Package

- SOT-23-6

■ Block Diagram

1. CO pin output logic active "H"

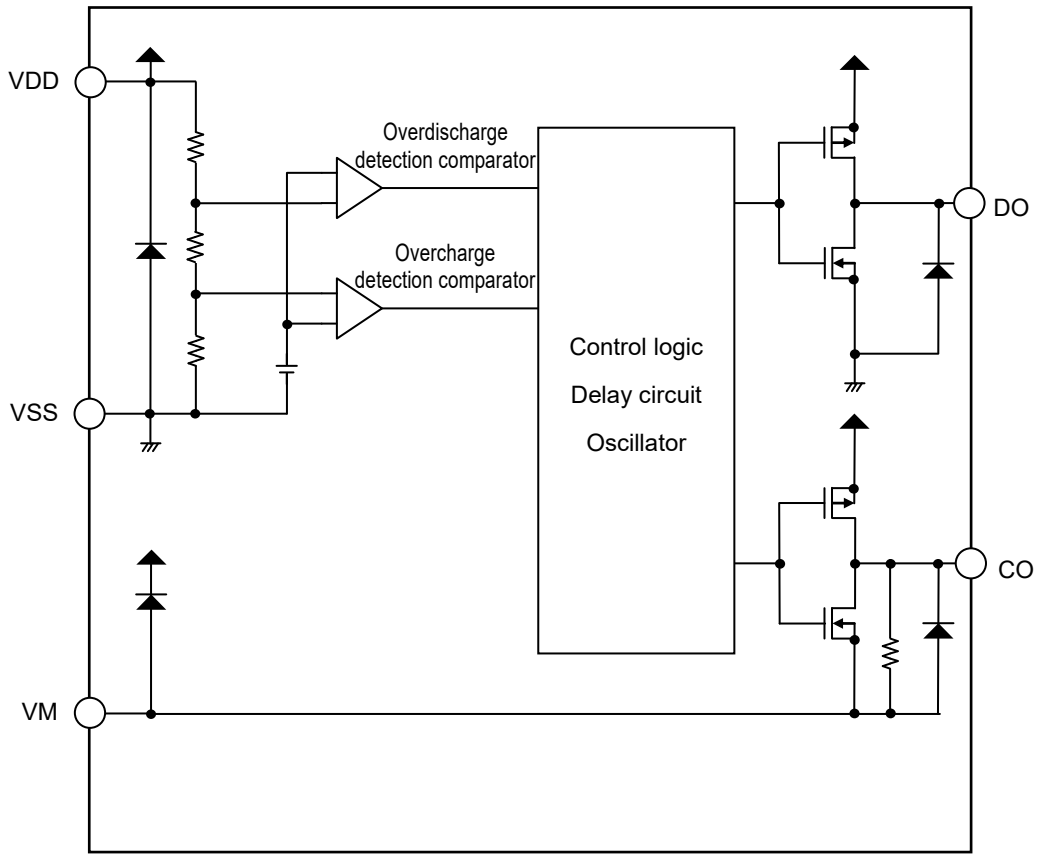

Figure 1

2. CO pin output logic active "L"

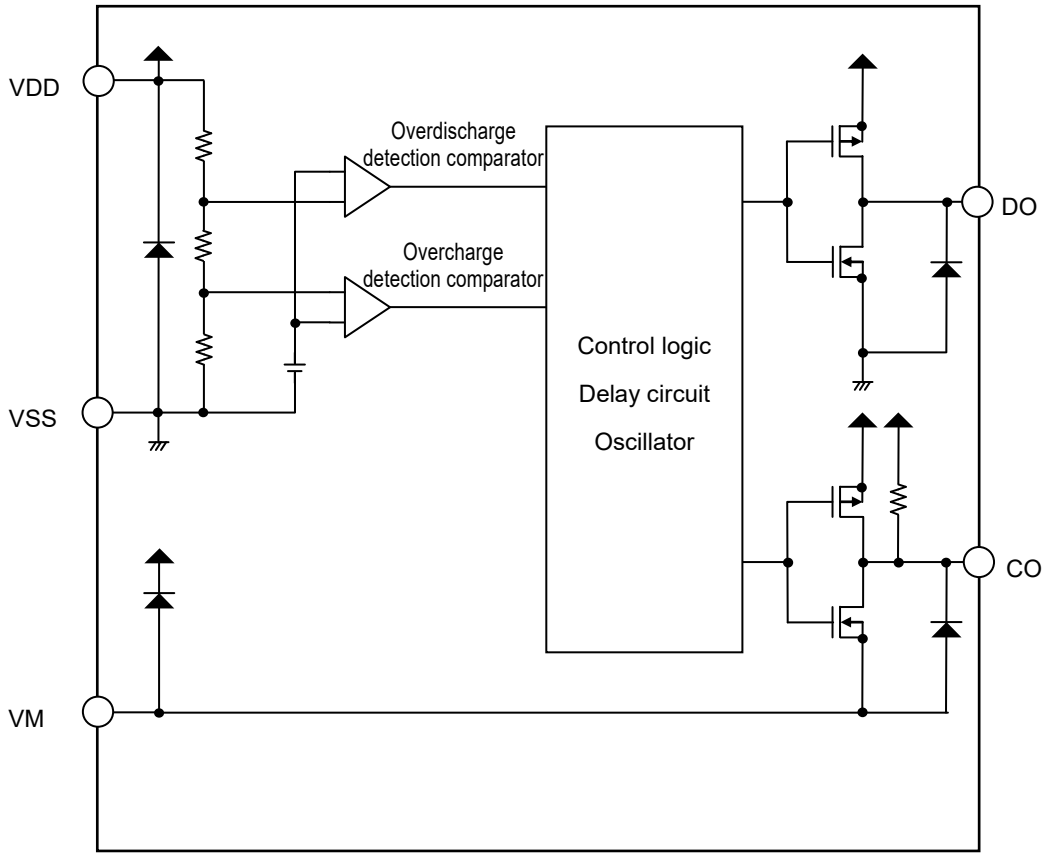

Figure 2

■ Product Name Structure

1. Product name

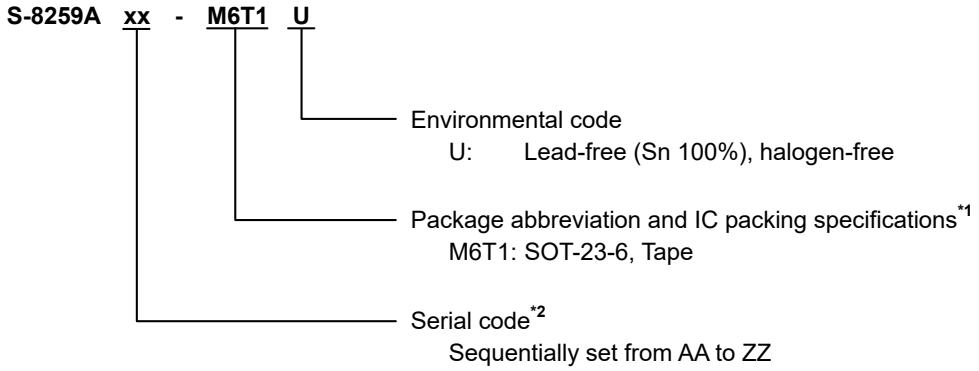

***1.** Refer to the tape drawing.
***2.** Refer to "**3. Product name list**".

2. Package

Table 1 Package Drawing Codes

Package Name	Dimension	Tape	Reel
SOT-23-6	MP006-A-P-SD	MP006-A-C-SD	MP006-A-R-SD

3. Product name list

Table 2

Product Name	Overcharge Detection Voltage [V_{CU}]	Overcharge Release Voltage [V_{CL}]	Overdischarge Detection Voltage [V_{DL}]	Overdischarge Release Voltage [V_{DU}]	Overcharge Detection Delay Time [t_{CU}]	Overcharge Release Delay Time [t_{CL}]	Overdischarge Detection Delay Time [t_{DL}]	CO Pin Output Logic*1
S-8259AAA-M6T1U	4.275 V	4.175 V	2.300 V	2.600 V	1.0 s	32 ms	128 ms	Active "L"
S-8259AAB-M6T1U	4.250 V	4.100 V	2.500 V	3.000 V	1.0 s	128 ms	256 ms	Active "L"
S-8259AAC-M6T1U	3.900 V	3.800 V	2.000 V	2.300 V	1.0 s	32 ms	128 ms	Active "L"
S-8259AAD-M6T1U	4.200 V	4.100 V	2.500 V	3.000 V	256 ms	2.0 s	32 ms	Active "L"
S-8259AAE-M6T1U	4.200 V	4.200 V	2.800 V	3.000 V	1.0 s	4.0 s	256 ms	Active "L"
S-8259AAG-M6T1U	3.650 V	3.650 V	2.500 V	3.000 V	1.0 s	4.0 s	1.0 s	Active "L"
S-8259AAH-M6T1U	4.425 V	4.325 V	2.600 V	2.900 V	1.0 s	32 ms	128 ms	Active "L"
S-8259AAI-M6T1U	4.350 V	4.350 V	2.600 V	3.000 V	1.0 s	4.0 s	128 ms	Active "L"
S-8259AAJ-M6T1U	4.250 V	4.250 V	2.300 V	2.600 V	1.0 s	4.0 s	1.0 s	Active "L"
S-8259AAK-M6T1U	4.375 V	4.375 V	2.800 V	3.000 V	1.0 s	4.0 s	1.0 s	Active "L"
S-8259AAL-M6T1U	3.475 V	3.475 V	2.800 V	2.880 V	256 ms	64 ms	32 ms	Active "H"
S-8259AAM-M6T1U	4.050 V	4.050 V	2.500 V	3.000 V	128 ms	32 ms	128 ms	Active "L"
S-8259AAN-M6T1U	3.600 V	3.600 V	2.900 V	2.980 V	256 ms	64 ms	32 ms	Active "H"
S-8259AAO-M6T1U	4.200 V	4.200 V	3.300 V	3.400 V	256 ms	64 ms	32 ms	Active "H"
S-8259AAP-M6T1U	4.250 V	4.150 V	2.800 V	3.000 V	1.0 s	128 ms	128 ms	Active "L"
S-8259AAQ-M6T1U	4.170 V	3.770 V	2.800 V	3.400 V	1.0 s	1.0 s	256 ms	Active "L"

***1.** CO pin output logic: Active "H", active "L"

Remark 1. Please contact our sales representatives for products other than the above.
2. The delay times can be changed within the range listed in **Table 3**. For details, please contact our sales representatives.

Table 3

Delay Time	Symbol	Selection Range						Remark
Overcharge detection delay time	t_{CU}	128 ms	256 ms	512 ms	1.0 s	2.0 s	4.0 s	Select a value from the left.
Overcharge release delay time	t_{CL}	32 ms	64 ms	128 ms	1.0 s	2.0 s	4.0 s	Select a value from the left.
overdischarge detection delay time	t_{DL}	32 ms	64 ms	128 ms	256 ms	–	–	Select a value from the left.

■ Pin Configuration

1. SOT-23-6

Top view

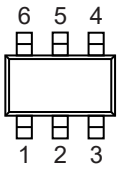

Figure 3

Table 4

Pin No.	Symbol	Description
1	DO	Output pin for overdischarge detection (CMOS output)
2	VM	Negative power supply input pin for CO pin
3	CO	Output pin for overcharge detection (CMOS output)
4	NC*1	No connection
5	VDD	Input pin for positive power supply
6	VSS	Input pin for negative power supply

***1.** The NC pin is electrically open.
The NC pin can be connected to VDD pin or VSS pin.

■ Absolute Maximum Ratings

Table 5

(Ta = +25°C unless otherwise specified)

Item	Symbol	Applied Pin	Absolute Maximum Rating	Unit
Input voltage between VDD pin and VSS pin	V_{DS}	VDD	V_{SS} – 0.3 to V_{SS} + 6	V
VM pin input voltage	V_{VM}	VM	V_{DD} – 28 to V_{DD} + 0.3	V
DO pin output voltage	V_{DO}	DO	V_{SS} – 0.3 to V_{DD} + 0.3	V
CO pin output voltage	V_{CO}	CO	V_{VM} – 0.3 to V_{DD} + 0.3	V
Power dissipation	P_D	–	650*1	mW
Operation ambient temperature	T_{opr}	–	–40 to +85	°C
Storage temperature	T_{stg}	–	–55 to +125	°C

***1.** When mounted on board
[Mounted board]
(1) Board size: 114.3 mm × 76.2 mm × t1.6 mm
(2) Board name: JEDEC STANDARD51-7

Caution The absolute maximum ratings are rated values exceeding which the product could suffer physical damage. These values must therefore not be exceeded under any conditions.

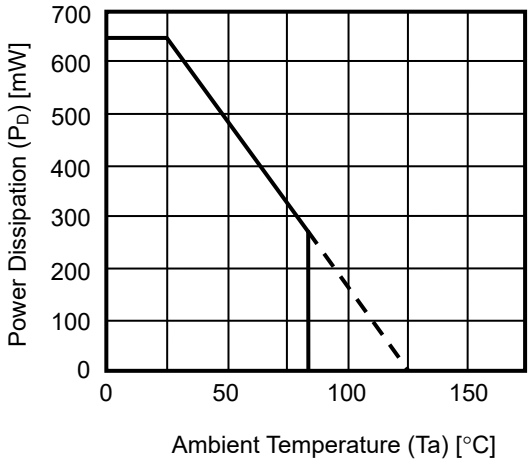

Figure 4 Power Dissipation of Package (When Mounted on Board)

■ Electrical Characteristics

1. Ta = +25°C

Table 6

(Ta = +25°C unless otherwise specified)

Item	Symbol	Condition	Min.	Typ.	Max.	Unit	Test Circuit
Detection Voltage							
Overcharge detection voltage	V_{CU}	–	$V_{CU}-0.020$	V_{CU}	$V_{CU}+0.020$	V	1
		Ta = −10°C ~ +60°C*1	$V_{CU}-0.025$	V_{CU}	$V_{CU}+0.025$	V	1
Overcharge release voltage	V_{CL}	$V_{CL} \neq V_{CU}$	$V_{CL}-0.050$	V_{CL}	$V_{CL}+0.050$	V	1
		$V_{CL} = V_{CU}$	$V_{CL}-0.025$	V_{CL}	$V_{CL}+0.020$	V	1
Overdischarge detection voltage	V_{DL}	–	$V_{DL}-0.050$	V_{DL}	$V_{DL}+0.050$	V	2
Overdischarge release voltage	V_{DU}	$V_{DL} \neq V_{DU}$	$V_{DU}-0.100$	V_{DU}	$V_{DU}+0.100$	V	2
Input Voltage							
Operation voltage between VDD pin and VSS pin	V_{DSOP}	–	1.5	–	6.0	V	–
Input Current							
Current consumption during operation	I_{OPE}	V_{DD} = 3.4 V, V_{VM} = 0 V	–	1.5	3.0	μA	3
Current consumption during overdischarge	I_{OPED}	V_{DD} = 1.5 V, V_{VM} = 0 V	–	–	2.0	μA	3
Output Resistance							
CO pin resistance "H" 1	R_{COH1}	–	5	10	20	kΩ	4
CO pin resistance "L" 1	R_{COL1}	–	5	10	20	kΩ	4
DO pin resistance "H"	R_{DOH}	–	5	10	20	kΩ	4
DO pin resistance "L"	R_{DOL}	–	5	10	20	kΩ	4
CO pin resistance "H" 2	R_{COH2}	Active "L"	1	4	–	MΩ	4
CO pin resistance "L" 2	R_{COL2}	Active "H"	1	4	–	MΩ	4
Delay Time							
Overcharge detection delay time	t_{CU}	–	$t_{CU} \times 0.7$	t_{CU}	$t_{CU} \times 1.3$	–	5
Overcharge release delay time	t_{CL}	–	$t_{CL} \times 0.7$	t_{CL}	$t_{CL} \times 1.3$	–	5
Overdischarge detection delay time	t_{DL}	–	$t_{DL} \times 0.7$	t_{DL}	$t_{DL} \times 1.3$	–	5

***1.** Since products are not screened at high and low temperature, the specification for this temperature range is guaranteed by design, not tested in production.

2. Ta = –40°C to +85°C*1

Table 7

(Ta = –40°C to +85°C*1 unless otherwise specified)

Item	Symbol	Condition	Min.	Typ.	Max.	Unit	Test Circuit
Detection Voltage							
Overcharge detection voltage	V_{CU}	–	$V_{CU}-0.045$	V_{CU}	$V_{CU}+0.030$	V	1
Overcharge release voltage	V_{CL}	$V_{CL} \neq V_{CU}$	$V_{CL}-0.080$	V_{CL}	$V_{CL}+0.060$	V	1
		$V_{CL} = V_{CU}$	$V_{CL}-0.050$	V_{CL}	$V_{CL}+0.030$	V	1
Overdischarge detection voltage	V_{DL}	–	$V_{DL}-0.080$	V_{DL}	$V_{DL}+0.060$	V	2
Overdischarge release voltage	V_{DU}	$V_{DL} \neq V_{DU}$	$V_{DU}-0.130$	V_{DU}	$V_{DU}+0.110$	V	2
Input Voltage							
Operation voltage between VDD pin and VSS pin	V_{DSOP}	–	1.5	–	6.0	V	–
Input Current							
Current consumption during operation	I_{OPE}	V_{DD} = 3.4 V, V_{VM} = 0 V	–	1.5	4.0	µA	3
Current consumption during overdischarge	I_{OPED}	V_{DD} = 1.5 V, V_{VM} = 0 V	–	–	3.0	µA	3
Output Resistance							
CO pin resistance "H" 1	R_{COH1}	–	2.5	10	30	kΩ	4
CO pin resistance "L" 1	R_{COL1}	–	2.5	10	30	kΩ	4
DO pin resistance "H"	R_{DOH}	–	2.5	10	30	kΩ	4
DO pin resistance "L"	R_{DOL}	–	2.5	10	30	kΩ	4
CO pin resistance "H" 2	R_{COH2}	Active "L"	0.5	4	–	MΩ	4
CO pin resistance "L" 2	R_{COL2}	Active "H"	0.5	4	–	MΩ	4
Delay Time							
Overcharge detection delay time	t_{CU}	–	$t_{CU} \times 0.5$	t_{CU}	$t_{CU} \times 2.5$	–	5
Overcharge release delay time	t_{CL}	–	$t_{CL} \times 0.5$	t_{CL}	$t_{CL} \times 2.5$	–	5
Overdischarge detection delay time	t_{DL}	–	$t_{DL} \times 0.5$	t_{DL}	$t_{DL} \times 2.5$	–	5

***1.** Since products are not screened at high and low temperature, the specification for this temperature range is guaranteed by design, not tested in production.

■ Test Circuits

Caution Unless otherwise specified, the output voltage levels "H" and "L" at CO pin (V_{CO}) are judged by V_{VM} + 1.0 V, and the output voltage levels "H" and "L" at DO pin (V_{DO}) are judged by V_{SS} + 1.0 V. Judge the CO pin level with respect to V_{VM} and the DO pin level with respect to V_{SS}.

1. Overcharge detection voltage, overcharge release voltage (Test circuit 1)

1. 1 Active "H"

Overcharge detection voltage (V_{CU}) is defined as the voltage V1 at which V_{CO} goes from "L" to "H" when the voltage V1 is gradually increased from the starting condition of V1 = 3.4 V. Overcharge release voltage (V_{CL}) is defined as the voltage V1 at which V_{CO} goes from "H" to "L" when the voltage V1 is then gradually decreased. Overcharge hysteresis voltage (V_{HC}) is defined as the difference between V_{CU} and V_{CL}.

1. 2 Active "L"

Overcharge detection voltage (V_{CU}) is defined as the voltage V1 at which V_{CO} goes from "H" to "L" when the voltage V1 is gradually increased from the starting condition of V1 = 3.4 V. Overcharge release voltage (V_{CL}) is defined as the voltage V1 at which V_{CO} goes from "L" to "H" when the voltage V1 is then gradually decreased. Overcharge hysteresis voltage (V_{HC}) is defined as the difference between V_{CU} and V_{CL}.

2. Overdischarge detection voltage, overdischarge release voltage (Test circuit 2)

Overdischarge detection voltage (V_{DL}) is defined as the voltage V1 at which V_{DO} goes from "H" to "L" when the voltage V1 is gradually decreased from the starting condition of V1 = 3.4 V. Overdischarge release voltage (V_{DU}) is defined as the voltage V1 at which V_{DO} goes from "L" to "H" when the voltage V1 is then gradually increased. Overdischarge hysteresis voltage (V_{HD}) is defined as the difference between V_{DU} and V_{DL}.

3. Current consumption during operation (Test circuit 3)

The current consumption during operation (I_{OPE}) is the current that flows through VDD pin (I_{DD}) under the set condition of V1 = 3.4 V.

4. Current consumption during overdischarge (Test circuit 3)

The current consumption during overdischarge (I_{OPED}) is I_{DD} under the set condition of V1 = 1.5 V.

5. CO pin resistance "H" 1 (Test circuit 4)

5. 1 Active "H"

The CO pin resistance "H" 1 (R_{COH1}) is the resistance between VDD pin and CO pin under the set conditions of V1 = 4.7 V, V2 = 4.3 V.

5. 2 Active "L"

The CO pin resistance "H" 1 (R_{COH1}) is the resistance between VDD pin and CO pin under the set conditions of V1 = 3.4 V, V2 = 3.0 V.

6. CO pin resistance "L" 1 (Test circuit 4)

6. 1 Active "H"

The CO pin resistance "L" 1 (R_{COL1}) is the resistance between VM pin and CO pin under the set conditions of V1 = 3.4 V, V2 = 0.4 V.

6. 2 Active "L"

The CO pin resistance "L" 1 (R_{COL1}) is the resistance between VM pin and CO pin under the set conditions of V1 = 4.7 V, V2 = 0.4 V.

7. DO pin resistance "H" (Test circuit 4)

The DO pin resistance "H" (R_{DOH}) is the resistance between VDD pin and DO pin under the set conditions of V1 = 3.4 V, V3 = 3.0 V.

8. DO pin resistance "L" (Test circuit 4)

The DO pin resistance "L" (R_{DOL}) is the resistance between VSS pin and DO pin under the set conditions of V1 = 1.8 V, V3 = 0.4 V.

9. CO pin resistance "H" 2 (Active "L") (Test circuit 4)

The CO pin resistance "H" 2 (R_{COH2}) is the resistance between VDD pin and CO pin under the set conditions of V1 = 4.7 V, V2 = 0 V.

10. CO pin resistance "L" 2 (Active "H") (Test circuit 4)

The CO pin resistance "L" 2 (R_{COL2}) is the resistance between VDD pin and CO pin under the set conditions of V1 = 4.7 V, V2 = 4.7 V.

11. Overcharge detection delay time (Test circuit 5)

11. 1 Active "H"

The overcharge detection delay time (t_{CU}) is the time needed for V_{CO} to go to "H" just after the voltage V1 increases and exceeds V_{CU} under the set condition of V1 = 3.4 V.

11. 2 Active "L"

The overcharge detection delay time (t_{CU}) is the time needed for V_{CO} to go to "L" just after the voltage V1 increases and exceeds V_{CU} under the set condition of V1 = 3.4 V.

12. Overcharge release delay time (Test circuit 5)

12. 1 Active "H"

The overcharge release delay time (t_{CL}) is the time needed for V_{CO} to go to "L" just after the voltage V1 decreases and falls below V_{CL} under the set condition of V1 = 4.7 V.

12. 2 Active "L"

The overcharge release delay time (t_{CL}) is the time needed for V_{CO} to go to "H" just after the voltage V1 decreases and falls below V_{CL} under the set condition of V1 = 4.7 V.

13. Overdischarge detection delay time (Test circuit 5)

The overdischarge detection delay time (t_{DL}) is the time needed for V_{DO} to go to "L" after the voltage V1 decreases and falls below V_{DL} under the set condition of V1 = 3.4 V.

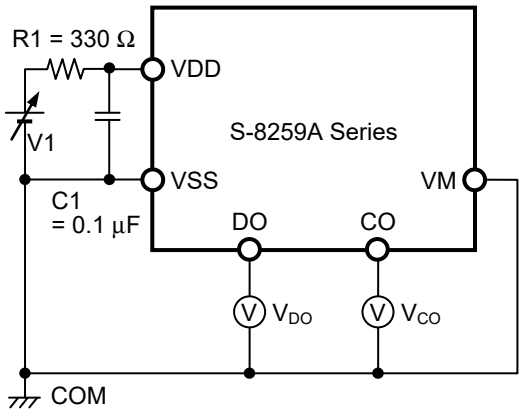

Figure 5 Test Circuit 1

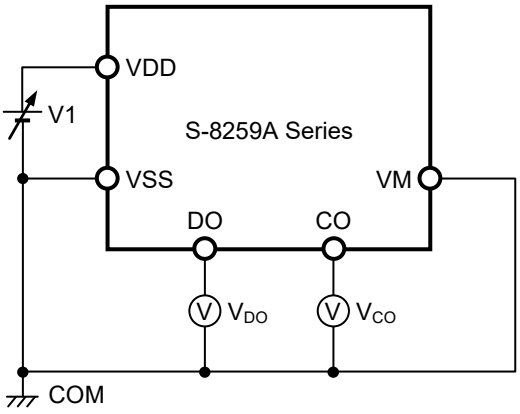

Figure 6 Test Circuit 2

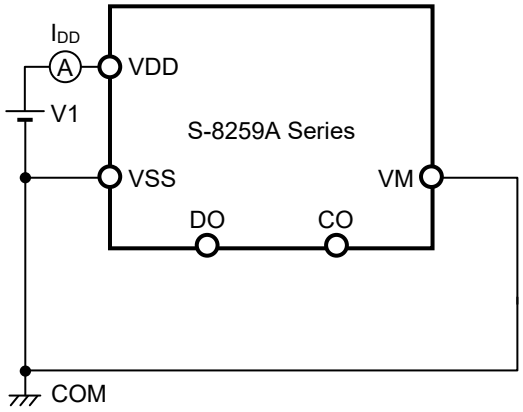

Figure 7 Test Circuit 3

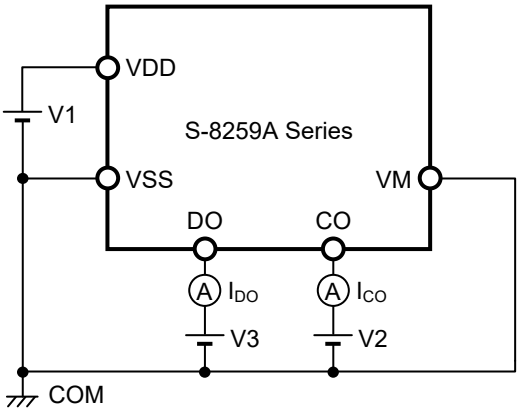

Figure 8 Test Circuit 4

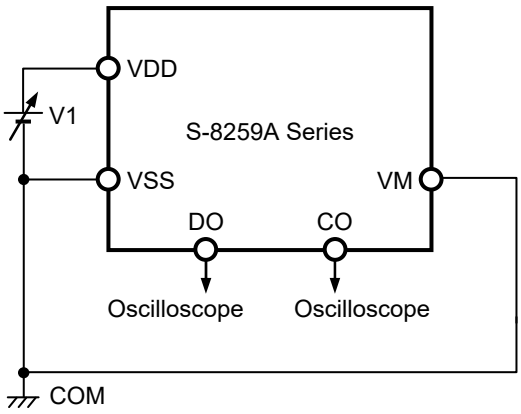

Figure 9 Test Circuit 5

■ Operation

Remark Refer to "■ **Connection Example**".

1. Normal status

The S-8259A Series monitors the voltage of the battery connected between VDD pin and VSS pin to control charging and discharging. When the battery voltage is in the range from overdischarge detection voltage (V_{DL}) to overcharge detection voltage (V_{CU}), CO pin and DO pin both output the release signals. This condition is called the normal status.

2. Overcharge status

When the battery voltage becomes higher than V_{CU} during charging in the normal status and the condition continues for the overcharge detection delay time (t_{CU}) or longer, CO pin outputs the overcharge detection signal. This condition is called the overcharge status.

When the battery voltage falls below the overcharge release voltage (V_{CL}) and the condition continues for the overcharge release delay time (t_{CL}) or longer, the S-8259A Series releases the overcharge status.

3. Overdischarge status

When the battery voltage falls below V_{DL} during discharging in the normal status and the condition continues for the overdischarge detection delay time (t_{DL}) or longer, DO pin outputs the overdischarge detection signal. This condition is called the overdischarge status.

When the battery voltage exceeds the overdischarge release voltage (V_{DU}), the S-8259A Series releases the overdischarge status.

■ Timing Chart

1. Overcharge detection, overdischarge detection

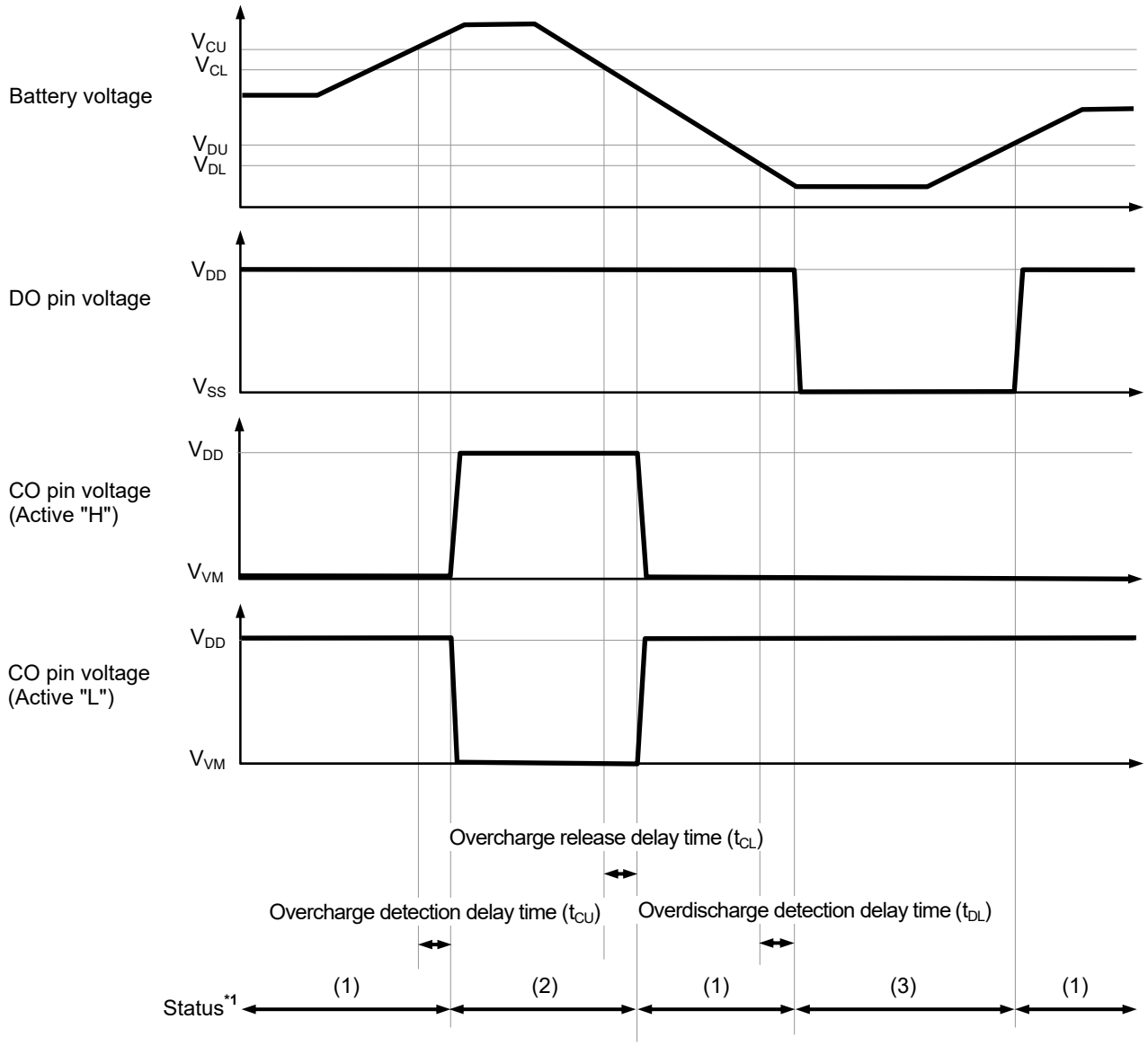

***1.** (1): Normal status
(2): Overcharge status
(3): Overdischarge status

Figure 10

■ Connection Example

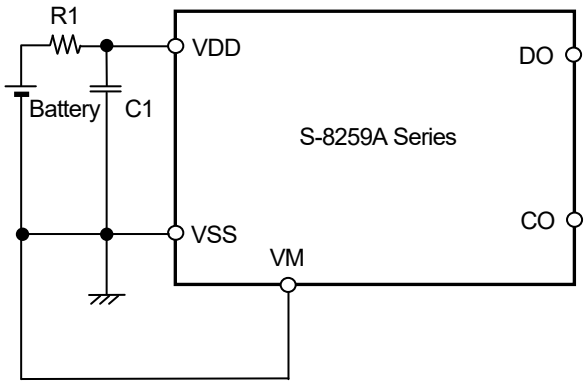

Figure 11

Table 8 Constants for External Components

Symbol	Part	Purpose	Min.	Typ.	Max.	Remark
R1	Resistor	ESD protection, For power fluctuation	150 Ω	330 Ω	1 kΩ	–
C1	Capacitor	For power fluctuation	0.068 μF	0.1 μF	1.0 μF	–

Caution 1. The constants may be changed without notice.

2. It has not been confirmed whether the operation is normal or not in circuits other than the connection example. In addition, the connection example and the constants do not guarantee proper operation. Perform thorough evaluation using the actual application to set the constants.

■ Precautions

- The application conditions for the input voltage, output voltage, and load current should not exceed the package power dissipation.
- Do not apply an electrostatic discharge to this IC that exceeds the performance ratings of the built-in electrostatic protection circuit.
- ABLIC Inc. claims no responsibility for any and all disputes arising out of or in connection with any infringement by products including this IC of patents owned by a third party.

■ Characteristics (Typical Data)

1. Current consumption

1. 1 I_{OPE} vs. Ta

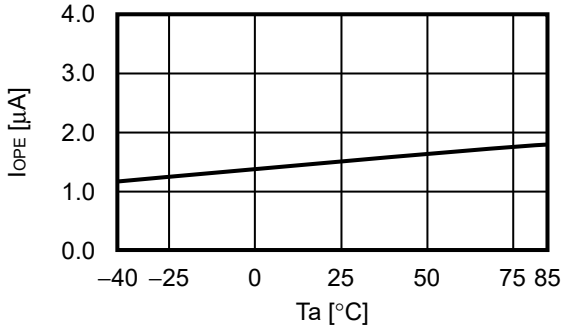

2. Detection voltage

2. 1 V_{CU} vs. Ta

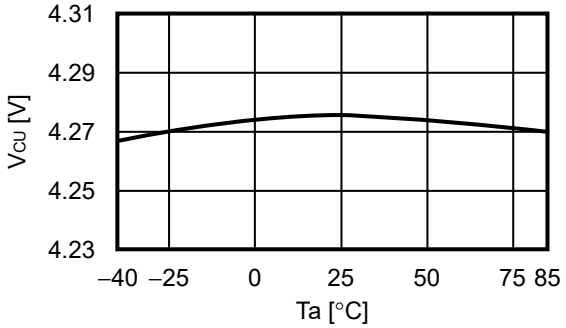

2. 2 V_{CL} vs. Ta

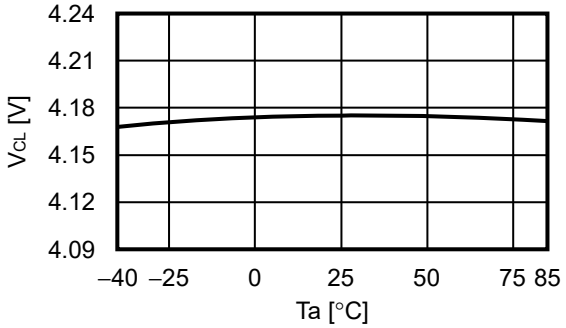

2. 3 V_{DL} vs. Ta

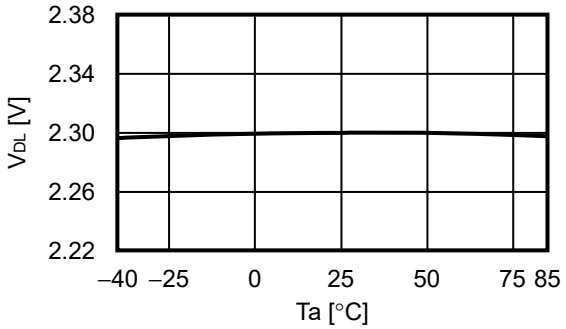

2. 4 V_{DU} vs. Ta

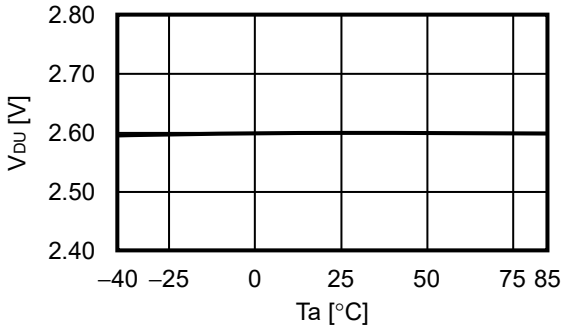

3. Delay time

3. 1 t_{CU} vs. Ta

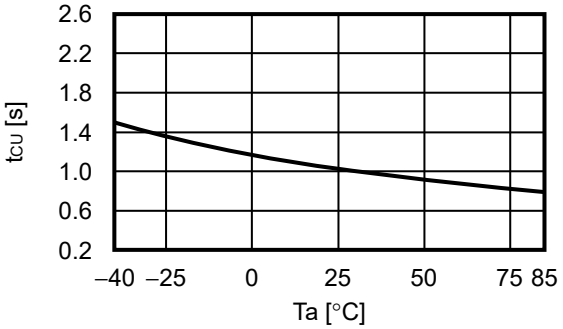

3. 2 t_{CL} vs. Ta

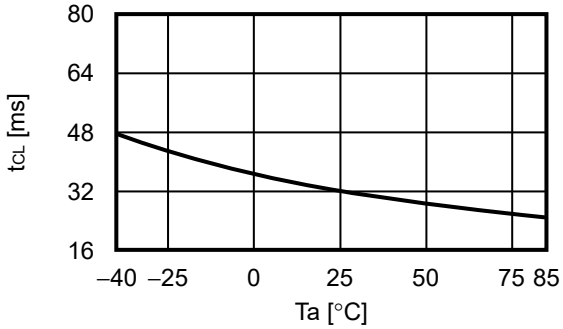

3. 3 t_{DL} vs. Ta

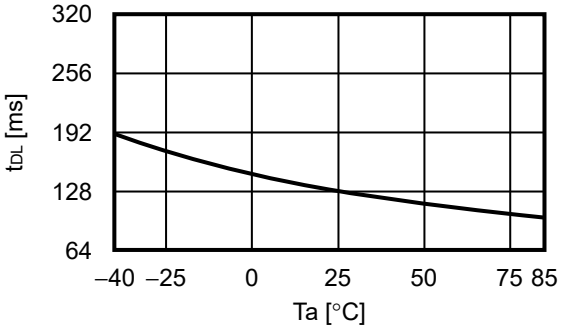

4. Output resistance

4. 1 R_{COH1} vs. V_{CO}

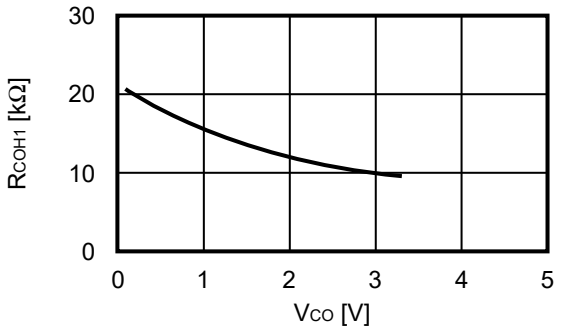

4. 2 R_{COL1} vs. V_{CO}

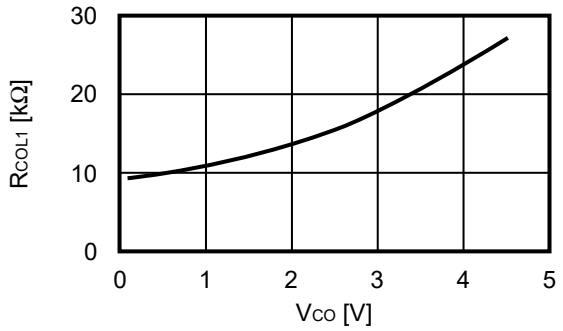

4. 3 R_{DOH} vs. V_{DO}

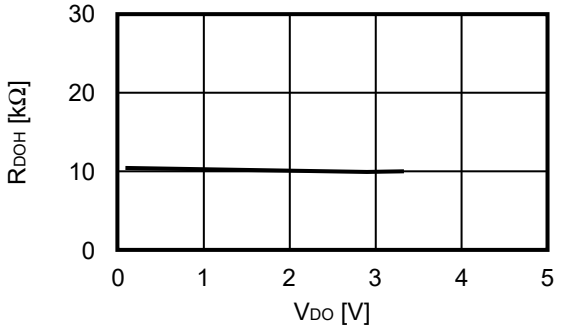

4. 4 R_{DOL} vs. V_{DO}

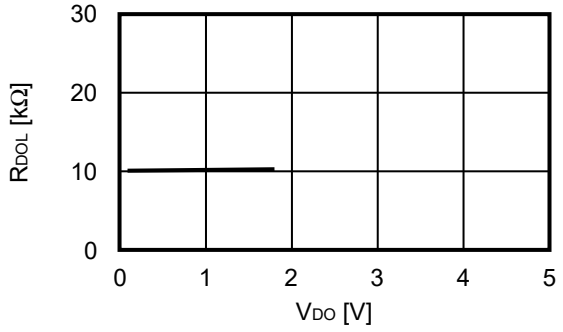

■ Marking Specifications

1. SOT-23-6

Top view

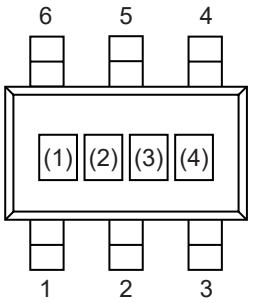

(1) to (3): Product code (Refer to **Product name vs. Product code**)
(4): Lot number

Product name vs. Product code

Product Name	Product Code		
	(1)	(2)	(3)
S-8259AAA-M6T1U	H	5	A
S-8259AAB-M6T1U	H	5	B
S-8259AAC-M6T1U	H	5	C
S-8259AAD-M6T1U	H	5	D
S-8259AAE-M6T1U	H	5	E
S-8259AAG-M6T1U	H	5	G
S-8259AAH-M6T1U	H	5	H
S-8259AAI-M6T1U	H	5	I
S-8259AAJ-M6T1U	H	5	J
S-8259AAK-M6T1U	H	5	K
S-8259AAL-M6T1U	H	5	L
S-8259AAM-M6T1U	H	5	M
S-8259AAN-M6T1U	H	5	N
S-8259AAO-M6T1U	H	5	O
S-8259AAP-M6T1U	H	5	P
S-8259AAQ-M6T1U	H	5	Q

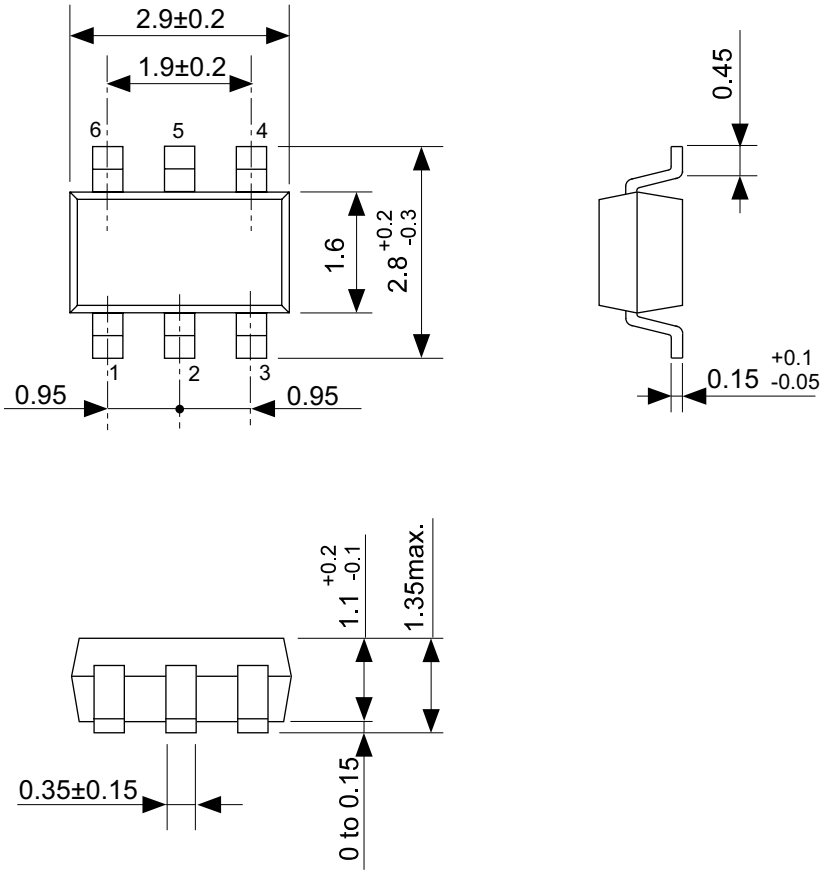

No. MP006-A-P-SD-2.1

TITLE	SOT236-A-PKG Dimensions
No.	MP006-A-P-SD-2.1
ANGLE	
UNIT	mm

ABLIC Inc.

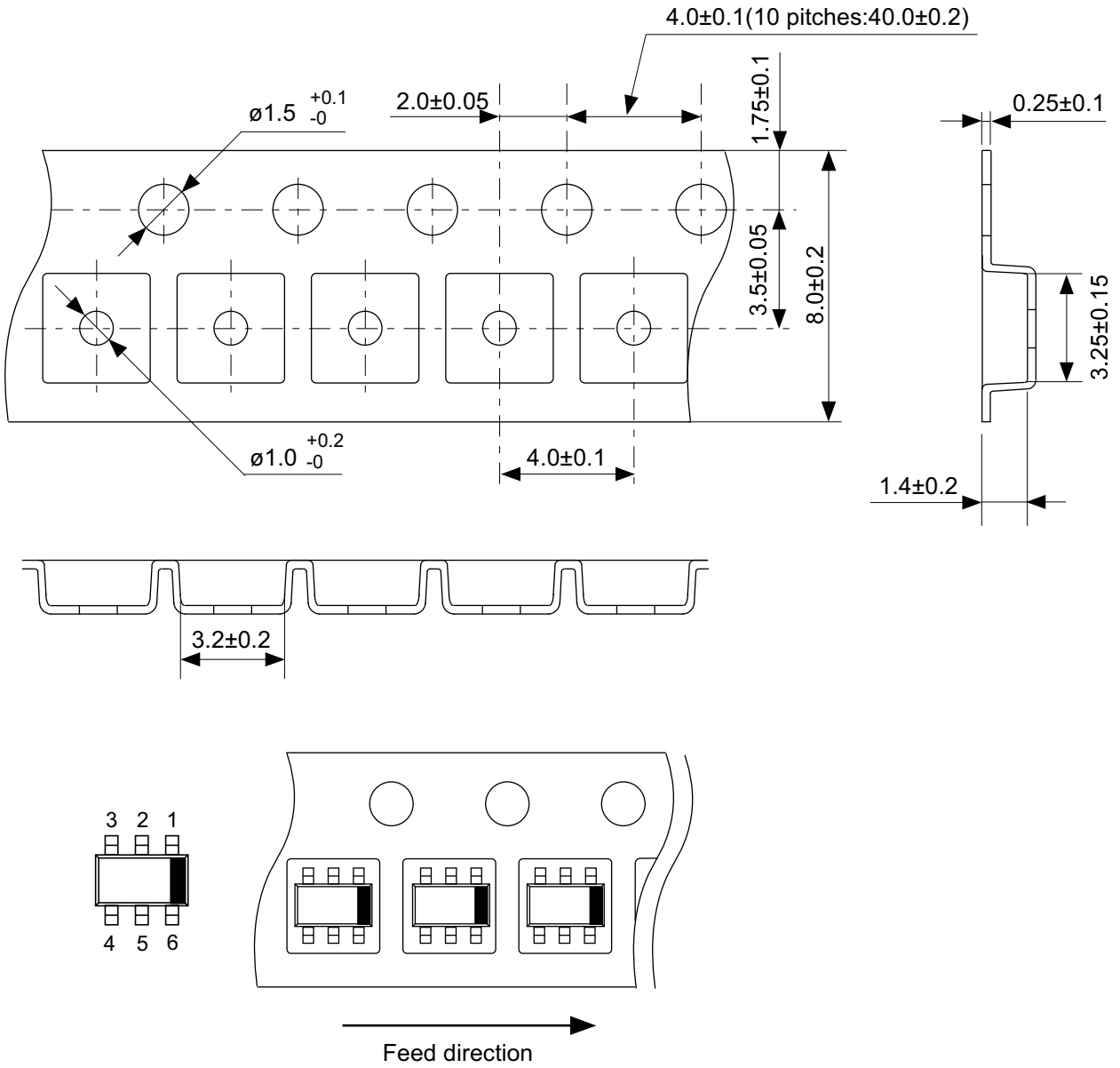

No. MP006-A-C-SD-3.1

TITLE	SOT236-A-Carrier Tape
No.	MP006-A-C-SD-3.1
ANGLE	
UNIT	mm
ABLIC Inc.	

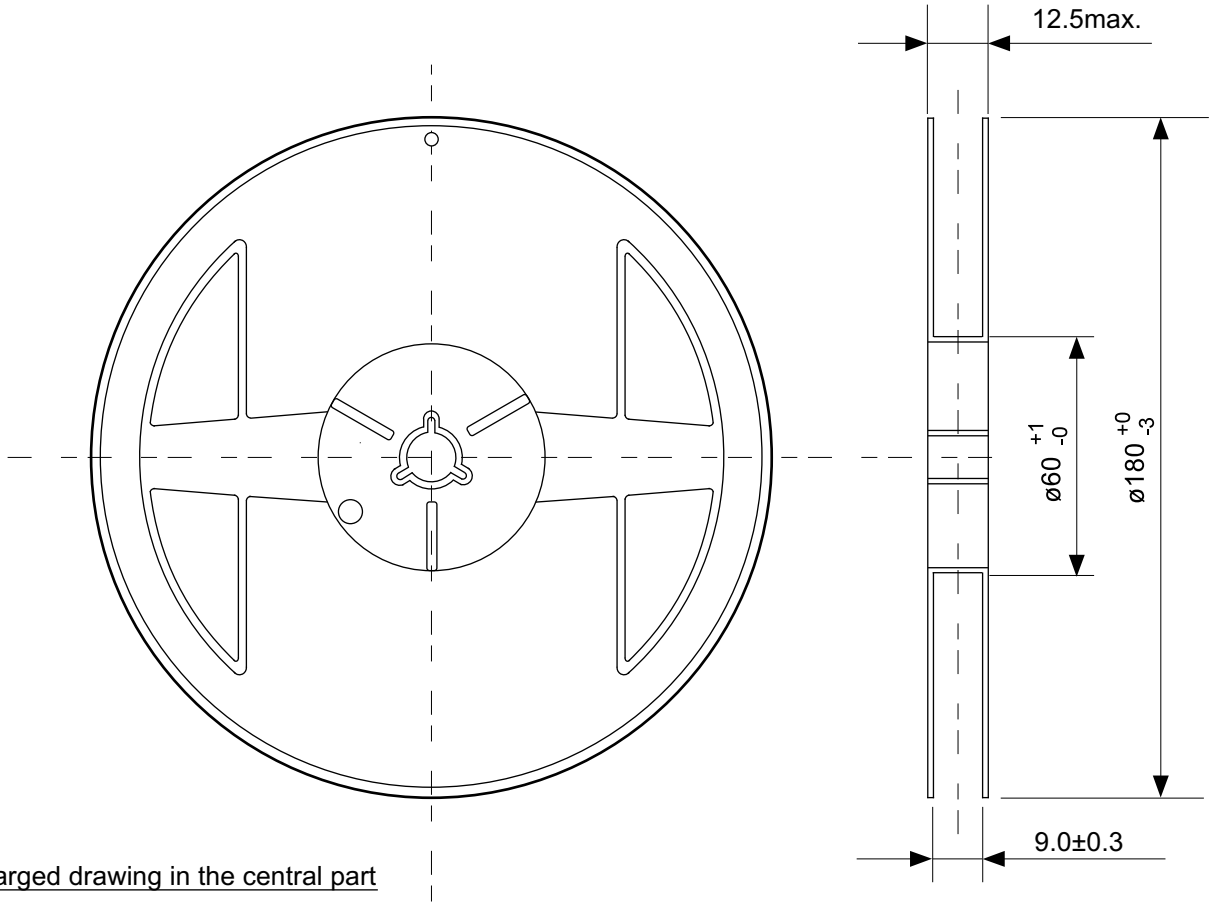

Enlarged drawing in the central part

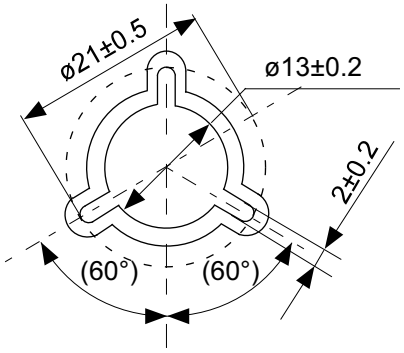

No. MP006-A-R-SD-2.1

TITLE	SOT236-A-Reel		
No.	MP006-A-R-SD-2.1		
ANGLE		QTY	3,000
UNIT	mm		
ABLIC Inc.			

Disclaimers (Handling Precautions)

1. All the information described herein (product data, specifications, figures, tables, programs, algorithms and application circuit examples, etc.) is current as of publishing date of this document and is subject to change without notice.
2. The circuit examples and the usages described herein are for reference only, and do not guarantee the success of any specific mass-production design.
   ABLIC Inc. is not liable for any losses, damages, claims or demands caused by the reasons other than the products described herein (hereinafter "the products") or infringement of third-party intellectual property right and any other right due to the use of the information described herein.
3. ABLIC Inc. is not liable for any losses, damages, claims or demands caused by the incorrect information described herein.
4. Be careful to use the products within their ranges described herein. Pay special attention for use to the absolute maximum ratings, operation voltage range and electrical characteristics, etc.
   ABLIC Inc. is not liable for any losses, damages, claims or demands caused by failures and / or accidents, etc. due to the use of the products outside their specified ranges.
5. Before using the products, confirm their applications, and the laws and regulations of the region or country where they are used and verify suitability, safety and other factors for the intended use.
6. When exporting the products, comply with the Foreign Exchange and Foreign Trade Act and all other export-related laws, and follow the required procedures.
7. The products are strictly prohibited from using, providing or exporting for the purposes of the development of weapons of mass destruction or military use. ABLIC Inc. is not liable for any losses, damages, claims or demands caused by any provision or export to the person or entity who intends to develop, manufacture, use or store nuclear, biological or chemical weapons or missiles, or use any other military purposes.
8. The products are not designed to be used as part of any device or equipment that may affect the human body, human life, or assets (such as medical equipment, disaster prevention systems, security systems, combustion control systems, infrastructure control systems, vehicle equipment, traffic systems, in-vehicle equipment, aviation equipment, aerospace equipment, and nuclear-related equipment), excluding when specified for in-vehicle use or other uses by ABLIC, Inc. Do not apply the products to the above listed devices and equipments.
   ABLIC Inc. is not liable for any losses, damages, claims or demands caused by unauthorized or unspecified use of the products.
9. In general, semiconductor products may fail or malfunction with some probability. The user of the products should therefore take responsibility to give thorough consideration to safety design including redundancy, fire spread prevention measures, and malfunction prevention to prevent accidents causing injury or death, fires and social damage, etc. that may ensue from the products' failure or malfunction.
   The entire system in which the products are used must be sufficiently evaluated and judged whether the products are allowed to apply for the system on customer's own responsibility.
10. The products are not designed to be radiation-proof. The necessary radiation measures should be taken in the product design by the customer depending on the intended use.
11. The products do not affect human health under normal use. However, they contain chemical substances and heavy metals and should therefore not be put in the mouth. The fracture surfaces of wafers and chips may be sharp. Be careful when handling these with the bare hands to prevent injuries, etc.
12. When disposing of the products, comply with the laws and ordinances of the country or region where they are used.
13. The information described herein contains copyright information and know-how of ABLIC Inc. The information described herein does not convey any license under any intellectual property rights or any other rights belonging to ABLIC Inc. or a third party. Reproduction or copying of the information from this document or any part of this document described herein for the purpose of disclosing it to a third-party is strictly prohibited without the express permission of ABLIC Inc.
14. For more details on the information described herein or any other questions, please contact ABLIC Inc.'s sales representative.
15. This Disclaimers have been delivered in a text using the Japanese language, which text, despite any translations into the English language and the Chinese language, shall be controlling.

2.4-2019.07

ENTEGRECİ

Bu belge www.entegreci.com üzerinden sunulmaktadır.

Elektronik komponent tedarikinde Entegreci

Entegreci, Eskişehir merkezli, Türkiye geneline satış yapan bir elektronik komponent mağazasıdır. Entegreler (IC), mikrodenetleyiciler, transistörler, diyotlar, pasif elemanlar, konnektörler, modüller ve geliştirme kartları tek adetten seri üretim adetlerine kadar satılır. Ürün sayfalarında güncel stok durumunu, fiyatı ve datasheet bağlantısını bulabilirsiniz.

Parça koduyla arama

Üretici parça numarasını yazın; stok ve fiyatı hemen görün.

www.entegreci.com

Ürün kategorileri

Entegreden kapasitöre tüm elektronik komponent kategorileri.

Kategorilere göz atın

Üreticiler

Aradığınız üreticinin ürünlerini tek sayfada inceleyin.

Üreticileri görün

Toplu alım ve teklif

Listede olmayan ya da yüksek adetli parçalar için teklif isteyin.

Teklif isteyin

www.entegreci.com | **destek@entegreci.com** | **0850 305 90 34**

Entegreci is an online electronic components store based in Türkiye. Search by manufacturer part number to see stock, prices and datasheets for integrated circuits, microcontrollers, transistors, passive components and connectors, or request a quote for parts that are not listed.

Bu sayfa Entegreci tarafından eklenmiştir. Belgenin önceki sayfaları asıl yayıncısına aittir ve içeriği değiştirilmemiştir; en güncel sürüm için belgenin yayıncısına başvurun.