S-8253C/D Series

BATTERY PROTECTION IC FOR 2-SERIES OR 3-SERIES-CELL PACK

www.ablic.com

© ABLIC Inc., 2008-2018

Rev.2.5_00

The S-8253C/D Series is a protection ICs for 2-series or 3-series cell lithium-ion rechargeable battery and includes high-accuracy voltage detector and delay circuit.
This IC is suitable for protecting lithium-ion battery packs from overcharge, overdischarge and overcurrent.

■ Features

(1) High-accuracy voltage detection for each cell

• Overcharge detection voltage n (n = 1 to 3)	3.900 V to 4.400 V (50 mV step)	Accuracy ±25 mV
• Overcharge release voltage n (n = 1 to 3)	3.800 V to 4.400 V *1	Accuracy ±50 mV
• Overdischarge detection voltage n (n = 1 to 3)	2.000 V to 3.000 V (100 mV step)	Accuracy ±80 mV
• Overdischarge release voltage n (n = 1 to 3)	2.000 V to 3.400 V *2	Accuracy ±100 mV

(2) Three-level overcurrent detection (Including load short circuiting detection)

• Overcurrent detection voltage 1	0.050 V to 0.300 V (50 mV step)	Accuracy ±25 mV
• Overcurrent detection voltage 2	0.500 V (Fixed)	
• Overcurrent detection voltage 3	1.200 V (Fixed)	

(3) Delay time (Overcharge, overdischarge, overcurrent) is available by only using an internal circuit. (External capacitors are unnecessary).
(4) Charge / discharge operation can be inhibited by the control pin.
(5) 0 V battery charge function available / unavailable is selectable.
(6) High-withstand voltage Absolute maximum rating 26 V
(7) Wide range of operating voltage 2 V to 24 V
(8) Wide range of operating temperature −40°C to +85°C
(9) Low current consumption
- During operation 28 µA max. (+25°C)
- During power-down 0.1 µA max. (+25°C)

(10) Lead-free, Sn100%, halogen-free*3

***1.** Overcharge release voltage = Overcharge detection voltage − Overcharge hysteresis voltage
(Overcharge hysteresis voltage n (n = 1 to 3) can be selected in 0 V, or in 0.1 V to 0.4 V in 50 mV step.)
***2.** Overdischarge release voltage = Overdischarge detection voltage + Overdischarge hysteresis voltage
(Overdischarge hysteresis voltage n (n = 1 to 3) can be selected in 0 V, or in 0.2 V to 0.7 V in 100 mV step.)
***3.** Refer to "**Product Name Structure**" for details.

■ Applications

- Lithium-ion rechargeable battery packs
- Lithium polymer rechargeable battery packs

■ Package

- 8-Pin TSSOP

■ Block Diagrams

1. S-8253C Series

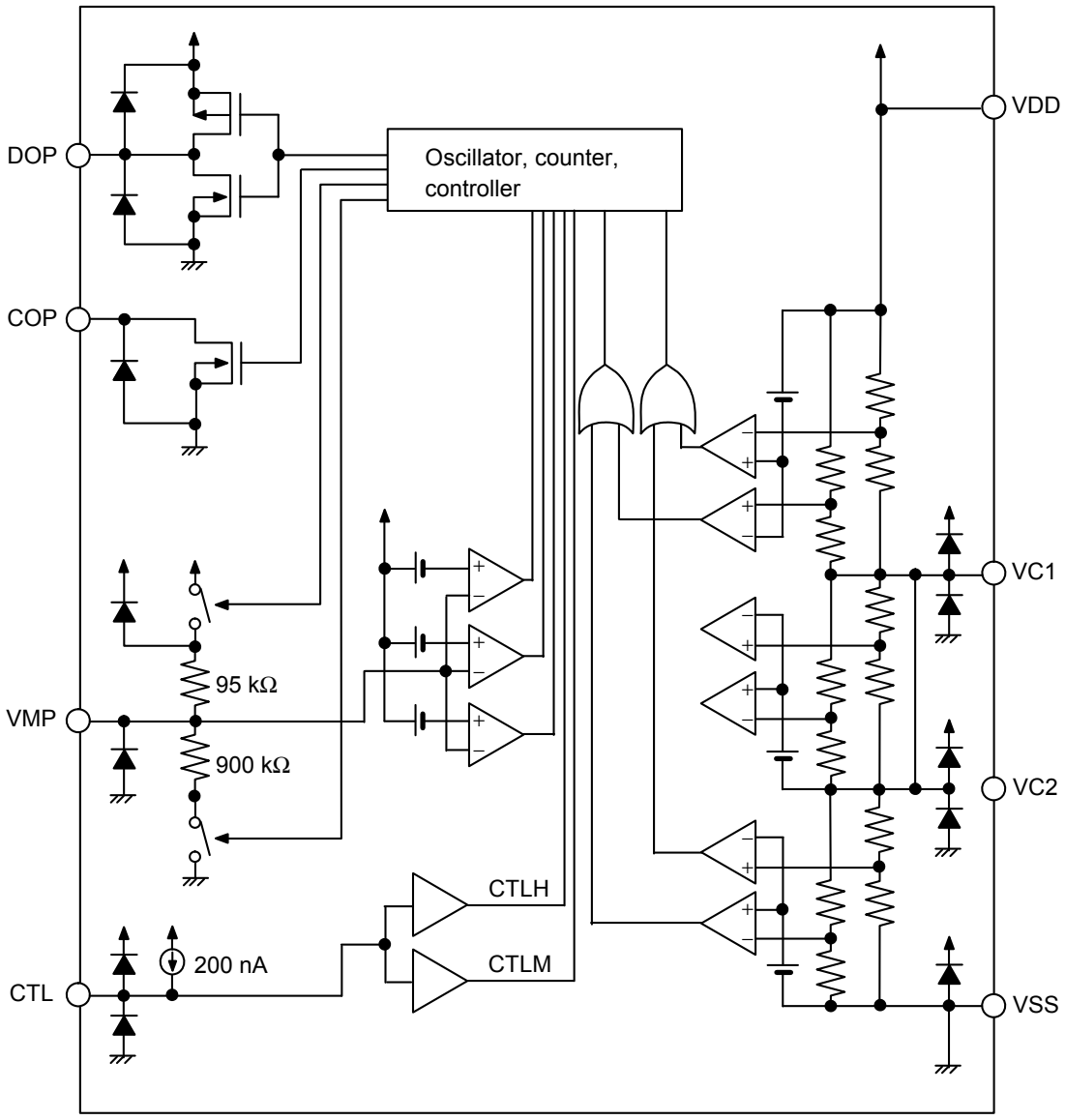

Remark All diodes shown in figure are parasitic diodes.

Figure 1

2. S-8253D Series

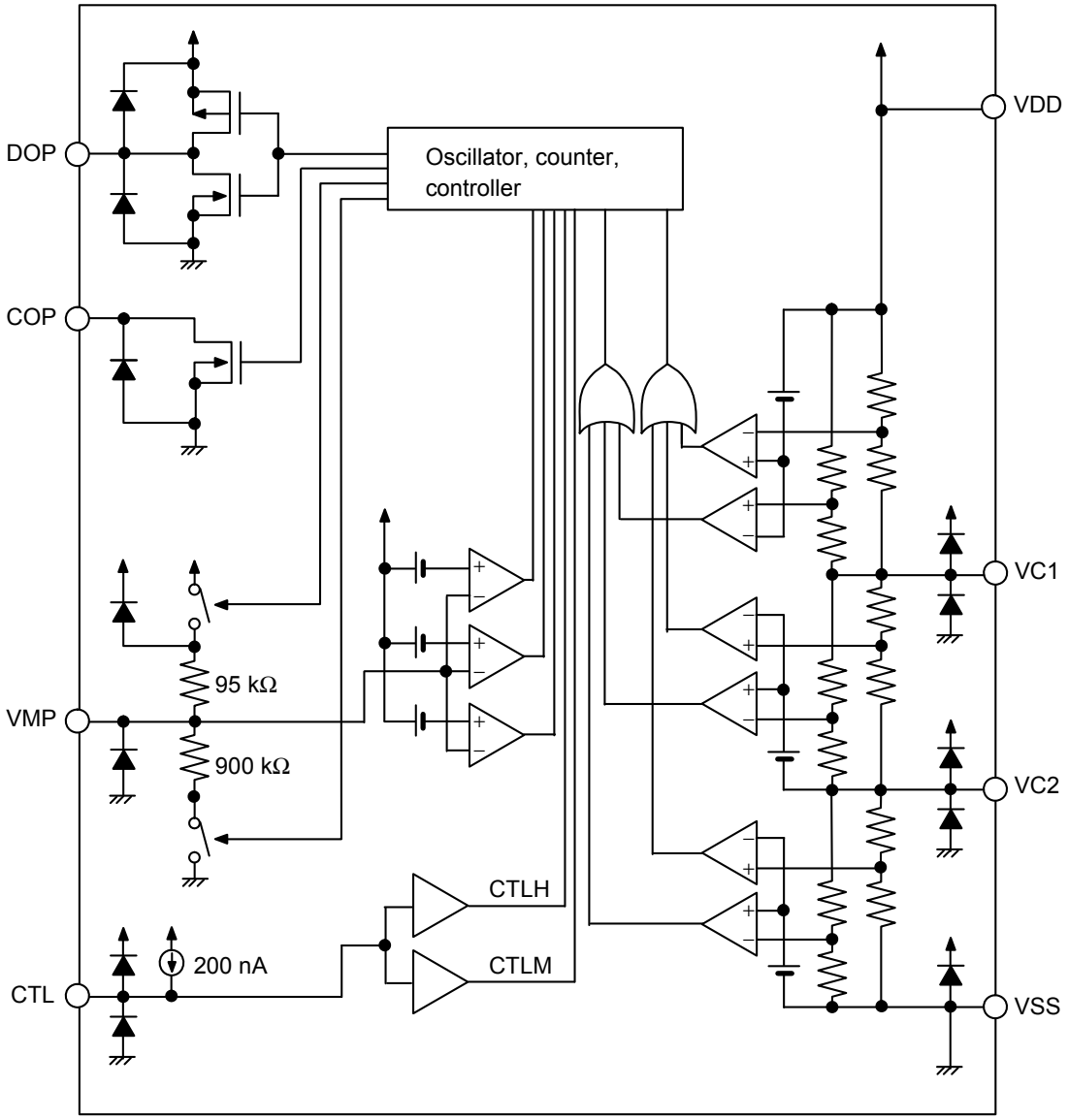

Remark All diodes shown in figure are parasitic diodes.

Figure 2

■ Product Name Structure

1. Product Name

1. 1 Environmental code = U, S

S-8253 x xx - T8T1 x

- Environmental code
  - U: Lead-free (Sn 100%), halogen-free
  - S: Lead-free, halogen-free
- Package abbreviation and IC packing specifications*1
  - T8T1: 8-Pin TSSOP, Tape
- Serial code*2
  - Sequentially set from AA to ZZ
- Product series name
  - C: 2-cell
  - D: 3-cell

***1.** Refer to the tape drawing.
***2.** Refer to "**3. Product Name List**".

1. 2 Environmental code = G

S-8253 x xx - T8T1 G Z

- Fixed
- Environmental code
  - G: Lead-free (for details, please contact our sales office)
- Package abbreviation and IC packing specifications*1
  - T8T1: 8-Pin TSSOP, Tape
- Serial code*2
  - Sequentially set from AA to ZZ
- Product series name
  - C: 2-cell
  - D: 3-cell

***1.** Refer to the tape drawing.
***2.** Refer to "**3. Product Name List**".

2. Package

Package Name		Drawing Code		
		Package	Tape	Reel
8-Pin TSSOP	Environmental code = G, S	FT008-A-P-SD	FT008-E-C-SD	FT008-E-R-SD
	Environmental code = U	FT008-A-P-SD	FT008-E-C-SD	FT008-E-R-S1

3. Product Name List

Table 1 S-8253C Series (For 2-Serial Cell)

Model No.	Overcharge detection voltage [V_{CU}]	Overcharge release voltage [V_{CL}]	Overdischarge detection voltage [V_{DL}]	Overdischarge release voltage [V_{DU}]	Overcurrent detection voltage 1 [V_{IOV1}]	0 V battery charge function
S-8253CAA-T8T1□□	4.350 ± 0.025 V	4.050 ± 0.050 V	2.400 ± 0.080 V	2.700 ± 0.100 V	0.300 ± 0.025 V	Available
S-8253CAC-T8T1y	4.350 ± 0.025 V	4.050 ± 0.050 V	2.400 ± 0.080 V	2.700 ± 0.100 V	0.080 ± 0.025 V	Available
S-8253CAD-T8T1□□	4.250 ± 0.025 V	4.050 ± 0.050 V	2.400 ± 0.080 V	2.700 ± 0.100 V	0.120 ± 0.025 V	Available
S-8253CAH-T8T1□□	4.350 ± 0.025 V	4.150 ± 0.050 V	2.300 ± 0.080 V	2.300 ± 0.080 V	0.090 ± 0.025 V	Available
S-8253CAI-T8T1□□	4.250 ± 0.025 V	4.050 ± 0.050 V	2.400 ± 0.080 V	2.700 ± 0.100 V	0.200 ± 0.025 V	Available
S-8253CAJ-T8T1□□	4.250 ± 0.025 V	4.050 ± 0.050 V	2.400 ± 0.080 V	2.700 ± 0.100 V	0.120 ± 0.025 V	Available
S-8253CAK-T8T1□□	4.250 ± 0.025 V	4.050 ± 0.050 V	2.400 ± 0.080 V	2.700 ± 0.100 V	0.300 ± 0.025 V	Available
S-8253CAL-T8T1y	4.400 ± 0.025 V	4.050 ± 0.050 V	2.400 ± 0.080 V	2.700 ± 0.100 V	0.120 ± 0.025 V	Available
S-8253CAM-T8T1y	4.225 ± 0.025 V	4.025 ± 0.050 V	2.600 ± 0.080 V	2.900 ± 0.100 V	0.200 ± 0.025 V	Available
S-8253CAN-T8T1U	4.400 ± 0.025 V	4.100 ± 0.050 V	2.800 ± 0.080 V	3.000 ± 0.100 V	0.300 ± 0.025 V	Available
S-8253CAO-T8T1U	4.400 ± 0.025 V	4.050 ± 0.050 V	2.400 ± 0.080 V	2.700 ± 0.100 V	0.150 ± 0.025 V	Available
S-8253CAP-T8T1U	4.350 ± 0.025 V	4.050 ± 0.050 V	2.400 ± 0.080 V	2.700 ± 0.100 V	0.300 ± 0.025 V	Unavailable
S-8253CAQ-T8T1U	3.800 ± 0.025 V	3.700 ± 0.050 V	2.200 ± 0.080 V	2.400 ± 0.100 V	0.100 ± 0.025 V	Unavailable
S-8253CAR-T8T1U	4.450 ± 0.025 V	4.200 ± 0.050 V	2.800 ± 0.080 V	3.000 ± 0.100 V	0.120 ± 0.025 V	Available

Remark 1. □□: GZ or U
y: S or U
2. Please select products of environmental code = U for Sn 100%, halogen-free products.

Table 2 S-8253D Series (For 3-Series Cell)

Model No.	Overcharge detection voltage [V_{CU}]	Overcharge release voltage [V_{CL}]	Overdischarge detection voltage [V_{DL}]	Overdischarge release voltage [V_{DU}]	Overcurrent detection voltage 1 [V_{IOV1}]	0 V battery charge function
S-8253DAA-T8T1□□	4.350 ± 0.025 V	4.050 ± 0.050 V	2.400 ± 0.080 V	2.700 ± 0.100 V	0.300 ± 0.025 V	Available
S-8253DAB-T8T1□□	4.300 ± 0.025 V	4.050 ± 0.050 V	2.700 ± 0.080 V	3.000 ± 0.100 V	0.200 ± 0.025 V	Unavailable
S-8253DAD-T8T1y	4.250 ± 0.025 V	4.050 ± 0.050 V	2.400 ± 0.080 V	2.700 ± 0.100 V	0.120 ± 0.025 V	Available
S-8253DAI-T8T1□□	4.350 ± 0.025 V	4.150 ± 0.050 V	2.200 ± 0.080 V	2.400 ± 0.100 V	0.160 ± 0.025 V	Available
S-8253DAK-T8T1y	4.350 ± 0.025 V	4.050 ± 0.050 V	2.400 ± 0.080 V	2.700 ± 0.100 V	0.300 ± 0.025 V	Available
S-8253DAL-T8T1U	4.250 ± 0.025 V	4.050 ± 0.050 V	2.600 ± 0.080 V	2.900 ± 0.100 V	0.120 ± 0.025 V	Available
S-8253DAM-T8T1U	3.800 ± 0.025 V	3.700 ± 0.050 V	2.200 ± 0.080 V	2.400 ± 0.100 V	0.100 ± 0.025 V	Unavailable
S-8253DAN-T8T1U	4.250 ± 0.025 V	4.050 ± 0.050 V	2.600 ± 0.080 V	2.900 ± 0.100 V	0.150 ± 0.025 V	Available

Remark 1. □□: GZ or U
y: S or U
2. Please select products of environmental code = U for Sn 100%, halogen-free products.

■ Pin Configuration

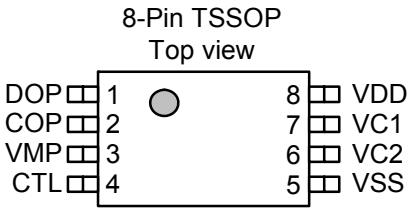

Figure 3

Table 3 S-8253C Series

Pin No.	Symbol	Description
1	DOP	Connection pin for discharge control FET gate (CMOS output)
2	COP	Connection pin for charge control FET gate (Nch open-drain output)
3	VMP	Pin for voltage detection between VDD and VMP (Detection pin for overcurrent)
4	CTL	Input pin for charge / discharge control signal, Pin for shortening test time (L : Normal operation, H : inhibit charge / discharge M ($V_{DD} \times 1 / 2$) : shorten test time)
5	VSS	Input pin for negative power supply, Connection pin for negative voltage of battery 2
6	VC2	No connection *1
7	VC1	Connection pin for negative voltage of battery 1, for positive voltage of battery 2
8	VDD	Input pin for positive power supply, Connection pin for positive voltage of battery 1

Table 4 S-8253D Series

Pin No.	Symbol	Description
1	DOP	Connection pin for discharge control FET gate (CMOS output)
2	COP	Connection pin for charge control FET gate (Nch open-drain output)
3	VMP	Pin for voltage detection between VDD and VMP (Detection pin for overcurrent)
4	CTL	Input pin for charge / discharge control signal, pin for shortening test time (L : Normal operation, H : inhibit charge / discharge, M ($V_{DD} \times 1 / 2$) : shorten test time)
5	VSS	Input pin for negative power supply, Connection pin for negative voltage of battery 3
6	VC2	Connection pin for negative voltage of battery 2, for positive voltage of battery 3
7	VC1	Connection pin for negative voltage of battery 1, for positive voltage of battery 2
8	VDD	Input pin for positive power supply, Connection pin for positive voltage of battery 1

***1.** No connection is electrically open. This pin can be connected to VDD or VSS.

■ Absolute Maximum Ratings

Table 5

(Ta = 25°C unless otherwise specified)

Item	Symbol	Applicable Pin	Absolute Maximum Rating	Unit
Input voltage between VDD and VSS	V_{DS}	—	V_{SS} − 0.3 to V_{SS} + 26	V
Input pin voltage	V_{IN}	VC1, VC2	V_{SS} − 0.3 to V_{DD} + 0.3	V
VMP pin input voltage	V_{VMP}	VMP	V_{SS} − 0.3 to V_{SS} + 26	V
DOP pin output voltage	V_{DOP}	DOP	V_{SS} − 0.3 to V_{DD} + 0.3	V
COP pin output voltage	V_{COP}	COP	V_{SS} − 0.3 to V_{VMP} + 0.3	V
CTL pin input voltage	V_{IN_CTL}	CTL	V_{SS} − 0.3 to V_{DD} + 0.3	V
Power dissipation	P_D	—	300 (When not mounted on board)	mW
			700[*1]	mW
Operating ambient temperature	T_{opr}	—	− 40 to + 85	°C
Storage temperature	T_{stg}	—	− 40 to + 125	°C

***1.** When mounted on board
[Mounted board]
(1) Board size : 114.3 mm × 76.2 mm × t1.6 mm
(2) Board name : JEDEC STANDARD51-7

Caution The absolute maximum ratings are rated values exceeding which the product could suffer physical damage. These values must therefore not be exceeded under any conditions.

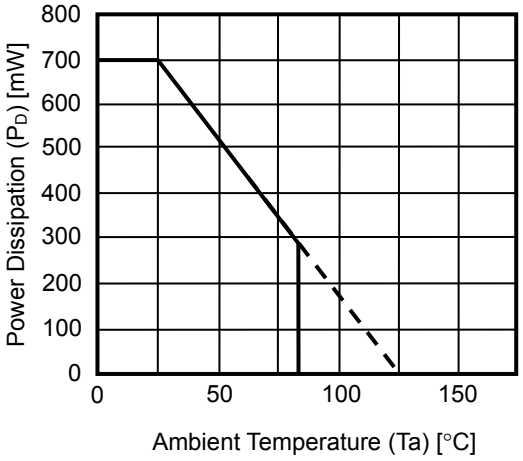

Figure 4 Power Dissipation of Package (When Mounted on Board)

■ Electrical Characteristics

1. Characteristics Other Than Detection Delay Time

Table 6 (1 / 2)

(Ta = 25°C unless otherwise specified)

Item	Symbol	Condition		Min.	Typ.	Max.	Unit	Test condition	Test circuit
DETECTION VOLTAGE									
Overcharge detection voltage n	V_{CUn}	3.900 V to 4.400 V, Adjustable		V_{CUn} −0.025	V_{CUn}	V_{CUn} +0.025	V	1	1
Overcharge release voltage n	V_{CLn}	3.800 V to 4.400 V, Adjustable	$V_{CL} \neq V_{CU}$	V_{CLn} −0.050	V_{CLn}	V_{CLn} +0.050	V	1	1
			$V_{CL} = V_{CU}$	V_{CLn} −0.025	V_{CLn}	V_{CLn} +0.025	V	1	1
Overdischarge detection voltage n	V_{DLn}	2.000 V to 3.000 V, Adjustable		V_{DLn} −0.080	V_{DLn}	V_{DLn} +0.080	V	1	1
Overdischarge release voltage n	V_{DUn}	2.000 V to 3.400 V, Adjustable	$V_{DL} \neq V_{DU}$	V_{DUn} −0.100	V_{DUn}	V_{DUn} +0.100	V	1	1
			$V_{DL} = V_{DU}$	V_{DUn} −0.080	V_{DUn}	V_{DUn} +0.080	V	1	1
Overcurrent detection voltage 1	V_{IOV1}	0.050 V to 0.300 V, Adjustable Based on V_{DD}		V_{IOV1} −0.025	V_{IOV1}	V_{IOV1} +0.025	V	2	1
Overcurrent detection voltage 2	V_{IOV2}	Based on V_{DD}		0.400	0.500	0.600	V	2	1
Overcurrent detection voltage 3	V_{IOV3}	Based on V_{DD}		0.900	1.200	1.500	V	2	1
Temperature coefficient 1 *1	T_{COE1}	Ta = 0°C to 50°C *3		−1.0	0	1.0	mV / °C	—	—
Temperature coefficient 2 *2	T_{COE2}	Ta = 0°C to 50°C *3		−0.5	0	0.5	mV / °C	—	—
0 V BATTERY CHARGE FUNCTION									
0 V battery charge starting charger voltage	V_{0CHA}	0 V battery charging; available		—	0.8	1.5	V	12	5
0 V battery charge inhibition battery voltage	V_{0INH}	0 V battery charging; unavailable		0.4	0.7	1.1	V	12	5
INTERNAL RESISTANCE									
Resistance between VMP and VDD	R_{VMD}	V1 = V2 = V3*4 = 3.5 V, $V_{VMP} = V_{SS}$		70	95	120	kΩ	6	2
Resistance between VMP and VSS	R_{VMS}	V1 = V2 = V3*4 = 1.8 V, $V_{VMP} = V_{DD}$		450	900	1800	kΩ	6	2

Table 6 (2 / 2)

(Ta = 25°C unless otherwise specified)

Item	Symbol	Condition	Min.	Typ.	Max.	Unit	Test condition	Test circuit
INPUT VOLTAGE								
Operating voltage between VDD and VSS	V_{DSOP}	Output voltage of DOP and COP fixed	2	—	24	V	—	—
CTL input voltage "H"	V_{CTLH}	—	V_{DD} −0.5	—	—	V	7	1
CTL input voltage "L"	V_{CTLL}	—	—	—	V_{SS} +0.5	V	7	1
INPUT CURRENT								
Current consumption during operation	I_{OPE}	V1 = V2 = V3[*4] = 3.5 V	—	14	28	µA	5	2
Current consumption during power-down	I_{PDN}	V1 = V2 = V3[*4] = 1.5 V	—	—	0.1	µA	5	2
VC1 pin current	I_{VC1}	V1 = V2 = V3[*4] = 3.5 V	−0.3	0	0.3	µA	9	3
VC2 pin current	I_{VC2}	V1 = V2 = V3[*4] = 3.5 V	−0.3	0	0.3	µA	9	3
CTL pin current "H"	I_{CTLH}	V1 = V2 = V3[*4] = 3.5 V, $V_{CTL1} = V_{DD}$	—	—	0.1	µA	8	3
CTL pin current "L"	I_{CTLL}	V1 = V2 = V3[*4] = 3.5 V, $V_{CTL1} = V_{SS}$	−0.4	−0.2	—	µA	8	3
OUTPUT CURRENT								
COP pin leakage current	I_{COH}	V_{COP} = 24 V	—	—	0.1	µA	10	4
COP pin sink current	I_{COL}	$V_{COP} = V_{SS}$ + 0.5 V	10	—	—	µA	10	4
DOP pin source current	I_{DOH}	$V_{DOP} = V_{DD}$ − 0.5 V	10	—	—	µA	11	4
DOP pin sink current	I_{DOL}	$V_{DOP} = V_{SS}$ + 0.5 V	10	—	—	µA	11	4

***1.** Voltage temperature coefficient 1 : Overcharge detection voltage

***2.** Voltage temperature coefficient 2 : Overcurrent detection voltage 1

***3.** Since products are not screened at high and low temperature, the specification for this temperature range is guaranteed by design, not tested in production.

***4.** The S-8253C Series does not have V3 because this IC is for 2-series cell battery protection.

2. Detection Delay Time

(1) S-8253CAA, S-8253CAC, S-8253CAD, S-8253CAI, S-8253CAJ, S-8253CAK, S-8253CAL, S-8253CAM, S-8253CAN, S-8253CAO, S-8253CAP, S-8253CAQ, S-8253CAR, S-8253DAA, S-8253DAB, S-8253DAD, S-8253DAK, S-8253DAL, S-8253DAM, S-8253DAN

Table 7

Item	Symbol	Condition	Min.	Typ.	Max.	Unit	Test Condition	Test Circuit
DELAY TIME (Ta = 25°C)								
Overcharge detection delay time	t_{CU}	—	0.92	1.15	1.38	s	3	1
Overdischarge detection delay time	t_{DL}	—	115	144	173	ms	3	1
Overcurrent detection delay time 1	t_{IOV1}	—	7.2	9	10.8	ms	4	1
Overcurrent detection delay time 2	t_{IOV2}	—	3.6	4.5	5.4	ms	4	1
Overcurrent detection delay time 3	t_{IOV3}	—	220	300	380	µs	4	1

(2) S-8253DAI

Table 8

Item	Symbol	Condition	Min.	Typ.	Max.	Unit	Test Condition	Test Circuit
DELAY TIME (Ta = 25°C)								
Overcharge detection delay time	t_{CU}	—	0.92	1.15	1.38	s	3	1
Overdischarge detection delay time	t_{DL}	—	115	144	173	ms	3	1
Overcurrent detection delay time 1	t_{IOV1}	—	3.6	4.5	5.4	ms	4	1
Overcurrent detection delay time 2	t_{IOV2}	—	0.89	1.1	1.4	ms	4	1
Overcurrent detection delay time 3	t_{IOV3}	—	220	300	380	µs	4	1

(3) S-8253CAH

Table 9

Item	Symbol	Condition	Min.	Typ.	Max.	Unit	Test Condition	Test Circuit
DELAY TIME (Ta = 25°C)								
Overcharge detection delay time	t_{CU}	—	0.92	1.15	1.38	s	3	1
Overdischarge detection delay time	t_{DL}	—	115	144	173	ms	3	1
Overcurrent detection delay time 1	t_{IOV1}	—	14.5	18	22	ms	4	1
Overcurrent detection delay time 2	t_{IOV2}	—	3.6	4.5	5.4	ms	4	1
Overcurrent detection delay time 3	t_{IOV3}	—	220	300	380	µs	4	1

■ Test Circuits

1. Overcharge Detection Voltage 1, Overcharge Release Voltage 1, Overdischarge Detection Voltage 1, Overdischarge Release Voltage 1 (Test Condition 1, Test Circuit 1)

Confirm that V1 = V2 = 3.5 V (S-8253C Series), V1 = V2 = V3 = 3.5 V (S-8253D Series), V4 = 0 V, V5 = 0 V, and the COP and DOP pins are "L" ($V_{DD} \times 0.1$ V or lower) (this status is referred to as the initial status).

1. 1 Overcharge Detection Voltage 1 (V_{CU1}), Overcharge Release Voltage 1 (V_{CL1})

Overcharge detection voltage 1 (V_{CU1}) is the voltage of V1 when the voltage of the COP pin is "H" ($V_{DD} \times 0.9$ V or more) after the V1 voltage has been gradually increased starting at the initial status. Overcharge release voltage 1 (V_{CL1}) is the voltage of V1 when the voltage at the COP pin is low after the V1 voltage has been gradually decreased.

1. 2 Overdischarge Detection Voltage 1 (V_{DL1}), Overdischarge Release Voltage 1 (V_{DU1})

Overdischarge detection voltage 1 (V_{DL1}) is the voltage of V1 when the voltage of the DOP pin is high after the V1 voltage has been gradually decreased starting at the initial status. Overdischarge release voltage 1 (V_{DU1}) is the voltage of V1 when the voltage at the DOP pin is low after the V1 voltage has been gradually increased.

By changing Vn (n = 2: S-8253C Series, n = 2, 3: S-8253D Series) the overcharge detection voltage (V_{CUn}), overcharge release voltage (V_{CLn}), overdischarge detection voltage (V_{DLn}), and overdischarge release voltage (V_{DUn}) can be measured in the same way as when n = 1.

2. Overcurrent Detection Voltage 1, Overcurrent Detection Voltage 2, Overcurrent Detection Voltage 3 (Test Condition 2, Test Circuit 1)

Confirm that V1 = V2 = 3.5 V (S-8253C Series), V1 = V2 = V3 = 3.5 V (S-8253D Series), V4 = 0 V, V5 = 0 V, and the COP pin and DOP pin are low (this status is referred to as the initial status).

2. 1 Overcurrent Detection Voltage 1 (V_{IOV1})

Overcurrent detection voltage 1 (V_{IOV1}) is the voltage of V5 when the voltages of the COP pin and DOP pin are high after the V5 voltage has been gradually increased starting at the initial status.

2. 2 Overcurrent Detection Voltage 2 (V_{IOV2})

Overcurrent detection voltage 2 (V_{IOV2}) is a voltage at V5 when; by increasing a voltage at V5 instantaneously (within 10 μs) from the initial state, the voltages of the COP and DOP pin are set to "H", and its delay time is in the range of minimum to maximum value of overcurrent detection delay time 2 (t_{IOV2}).

2. 3 Overcurrent Detection Voltage 3 (V_{IOV3})

Overcurrent detection voltage 3 (V_{IOV3}) is a voltage at V5 when; by increasing a voltage at V5 instantaneously (within 10 μs) from the initial state, the voltages of the COP and DOP pin are set to "H", and its delay time is in the range of minimum to maximum value of overcurrent detection delay time 3 (t_{IOV3}).

3. Overcharge Detection Delay Time, Overdischarge Detection Delay Time (Test Condition 3, Test Circuit 1)

Confirm that V1 = V2 = 3.5 V (in S-8253C Series), V1 = V2 = V3 = 3.5 V (in S-8253D Series), V4 = 0 V, V5 = 0 V, and the COP pin and DOP pin are low (this status is referred to as the initial status).

3. 1 Overcharge Detection Delay Time (t_{CU})

The overcharge detection delay time (t_{CU}) is the time it takes for the voltage of the COP pin to change from low to high after the voltage of V1 is instantaneously changed from overcharge detection voltage 1 (V_{CU1}) − 0.2 V to overcharge detection voltage 1 (V_{CU1}) + 0.2 V (within 10 μs) starting at the initial status.

3. 2 Overdischarge Detection Delay Time (t_{DL})

The overdischarge detection delay time (t_{DL}) is the time it takes for the voltage of the DOP pin to change from low to high after the voltage of V1 is instantaneously changed from overdischarge detection voltage 1 (V_{DL1}) + 0.2 V to overdischarge detection voltage 1 (V_{DL1}) − 0.2 V (within 10 μs) starting at the initial status.

4. Overcurrent Detection Delay Time 1, Overcurrent Detection Delay Time 2, Overcurrent Detection Delay Time 3 (Test Condition 4, Test Circuit 1)

Confirm that V1 = V2 = 3.5 V (S-8253C Series), V1 = V2 = V3 = 3.5 V (S-8253D Series), V4 = 0 V, V5 = 0 V, and the COP pin and DOP pin are low (this status is referred to as the initial status).

4. 1 Overcurrent Detection Delay Time 1 (t_{IOV1})

Overcurrent detection delay time 1 (t_{IOV1}) is the time it takes for the voltage of the DOP pin to change from low to high after the voltage of V5 is instantaneously changed to 0.35 V (within 10 μs) starting at the initial status.

4. 2 Overcurrent Detection Delay Time 2 (t_{IOV2})

Overcurrent detection delay time 2 (t_{IOV2}) is the time it takes for the voltage of the DOP pin to change from low to high after the voltage of V5 is instantaneously changed to 0.7 V (within 10 μs) starting at the initial status.

4. 3 Overcurrent Detection Delay Time 3 (t_{IOV3})

Overcurrent detection delay time 3 (t_{IOV3}) is the time it takes for the voltage of the DOP pin to change from low to high after the voltage of V5 is instantaneously changed to 1.6 V (within 10 μs) starting at the initial status.

5. Current Consumption during Operation, Current Consumption during Power-down (Test Condition 5, Test Circuit 2)

5. 1 Current Consumption during Operation (I_{OPE})

The current consumption during operation (I_{OPE}) is the current of the VSS pin (I_{SS}) when V1 = V2 = 3.5 V (S-8253C Series), V1 = V2 = V3 = 3.5 V (S-8253D Series), S1 = ON, and S2 = OFF.

5. 2 Current Consumption during Power-down (I_{PDN})

The current consumption during power-down (I_{PDN}) is the current of the VSS pin (I_{SS}) when V1 = V2 = 1.5 V (S-8253C Series), V1 = V2 = V3 = 1.5 V (S-8253D Series), S1 = OFF, and S2 = ON.

6. Resistance between VMP and VDD, Resistance between VMP and VSS (Test Condition 6, Test Circuit 2)

Confirm that V1 = V2 = 3.5 V (S-8253C Series), V1 = V2 = V3 = 3.5 V (S-8253D Series), S1 = ON, and S2 = OFF (this status is referred to as the initial status).

6. 1 Resistance between VMP and VDD (R_{VMD})

The resistance between VMP and VDD (R_{VMD}) is determined based on the current of the VMP pin (I_{VMD}) after S1 and S2 are switched to OFF and ON, respectively, starting at the initial status.

S-8253C Series : $R_{VMD} = (V1 + V2) / I_{VMD}$
S-8253D Series : $R_{VMD} = (V1 + V2 + V3) / I_{VMD}$

6. 2 Resistance between VMP and VSS (R_{VMS})

The resistance between VMP and VSS (R_{VMS}) is determined based on the current of the VMP pin (I_{VMS}) after V1 = V2 = 1.8 V (S-8253C Series) or V1 = V2 = V3 = 1.8 V (S-8253D Series) are set starting at the initial status.

S-8253C Series : $R_{VMS} = (V1 + V2) / I_{VMS}$
S-8253D Series : $R_{VMS} = (V1 + V2 + V3) / I_{VMS}$

7. CTL Pin Input Voltage “H” (Test Condition 7, Test Circuit 1)

Confirm that V1 = V2 = 3.5 V (S-8253C Series), V1 = V2 = V3 = 3.5 V (S-8253D Series), V4 = 0 V, V5 = 0 V, and the COP pin and DOP pin are low (this status is referred to as the initial status).

7. 1 CTL Pin Input Voltage “H” (V_{CTLH})

The CTL pin input voltage “H” (V_{CTLH}) is the voltage of V4 when the voltages of the COP pin and DOP pin are high after the voltage of V4 has been gradually increased starting at the initial status.

8. CTL Pin Input Voltage “L” (Test condition 7, Test circuit 1)

Confirm that V1 = V2 = 3.5 V (S-8253C Series), V1 = V2 = V3 = 3.5 V (S-8253D Series), V4 = 0 V, V5 = 0.35 V, and the COP pin and DOP pin are high (this status is referred to as the initial status).

8. 1 CTL Pin Input Voltage “L” (V_{CTLL})

The CTL pin input voltage “L” (V_{CTLL}) is the voltage of V4 when the voltages of the COP pin and DOP pin are low after the voltage of V4 has been gradually increased starting at the initial status.

9. CTL Pin Current “H”, CTL Pin Current “L” (Test Condition 8, Test Circuit 3)

9. 1 CTL Pin Current “H” (I_{CTLH}), CTL Pin Current “L” (I_{CTLL})

The CTL pin current “H” (I_{CTLH}) is the current that flows through the CTL pin when V1 = V2 = 3.5 V (S-8253C Series), V1 = V2 = V3 = 3.5 V (S-8253D Series), and S3 = ON, S4 = OFF. The CTL pin current “L” (I_{CTLL}) is the current that flows through the CTL pin when S3 = OFF and S4 = ON after that.

10. VC1 Pin Current, VC2 Pin Current (Test Condition 9, Test Circuit 3)

10. 1 VC1 Pin Current (I_{VC1}), VC2 Pin Current (I_{VC2})

The VC1 pin current (I_{VC1}) is the current that flows through the VC1 pin when V1 = V2 = 3.5 V (S-8253C Series), V1 = V2 = V3 = 3.5 V (S-8253D Series), and S3 = OFF, S4 = ON. Similarly, the VC2 pin current (I_{VC2}) is the current that flows through the VC2 pin under these conditions (S-8253D Series only).

11. COP Pin Leakage Current, COP Pin Sink Current (Test Condition 10, Test Circuit 4)

11. 1 COP Pin Leakage Current (I_{COH})

The COP pin leakage current (I_{COH}) is the current that flows through the COP pin when V1 = V2 = 12 V (S-8253C Series), V1 = V2 = V3 = 8 V (S-8253D Series), S6 = S7 = S8 = OFF, and S5 = ON.

11. 2 COP Pin Sink Current (I_{COL})

The COP pin sink current (I_{COL}) is the current that flows through the COP pin when V1 = V2 = 3.5 V (S-8253C Series), V1 = V2 = V3 = 3.5 V (S-8253D Series), V6 = 0.5 V, S5 = S7 = S8 = OFF, and S6 = ON.

12. DOP Pin Source Current, DOP Pin Sink Current (Test Condition 11, Test Circuit 4)

12. 1 DOP Pin Source Current (I_{DOH})

The DOP pin source current (I_{DOH}) is the current that flows through the DOP pin when V1 = V2 = 1.8 V (S-8253C Series), V1 = V2 = V3 = 1.8 V (S-8253D Series), V7 = 0.5 V, S5 = S6 = S8 = OFF, and S7 = ON.

12. 2 DOP Pin Sink Current (I_{DOL})

The DOP pin sink current (I_{DOL}) is the current that flows through the DOP pin when V1 = V2 = 3.5 V (S-8253C Series), V1 = V2 = V3 = 3.5 V (S-8253D Series), V8 = 0.5 V, S5 = S6 = S7 = OFF, and S8 = ON.

13. 0 V Battery Charge Starting Charger Voltage (Product with 0 V Battery Charge Function), 0 V Battery Charge Inhibition Battery Voltage (Product with 0 V Battery Charge Inhibition Function) (Test Condition 12, Test Circuit 5)

13. 1 0 V Battery Charge Starting Charger Voltage (V_{0CHA}) (Product with 0 V Battery Charge Function)

The COP pin voltage should be lower than V_{0CHA} max. – 1 V when V1 = V2 = 0 V (S-8253C Series), V1 = V2 = V3 = 0 V (S-8253D Series), and V9 = V_{VMP} = V_{0CHA} max.

13. 2 0 V Battery Charge Inhibition Battery Voltage (V_{0INH}) (Product with 0 V Battery Charge Inhibition Function)

The COP pin voltage should be higher than V_{VMP} – 1 V when V1 = V2 = V_{0INH} min. (S-8253C Series), V1 = V2 = V3 = V_{0INH} min. (S-8253D Series), and V9 = V_{VMP} = 24 V.

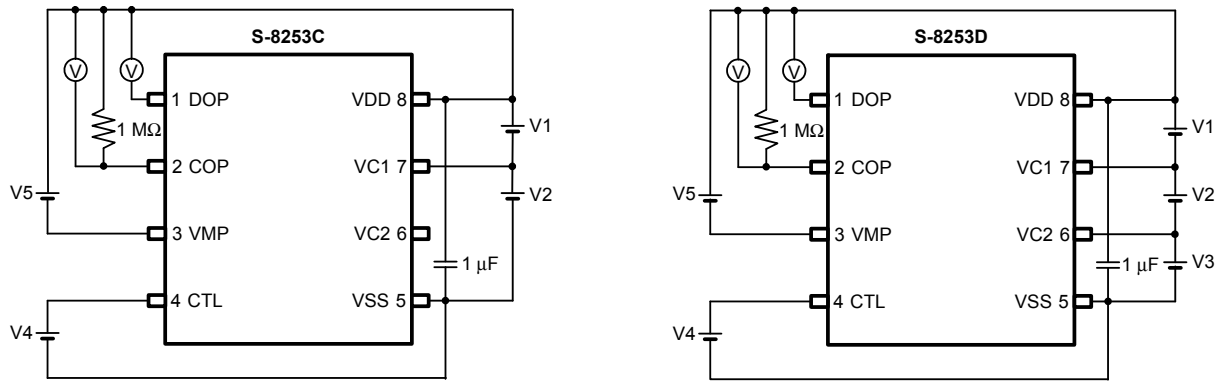

Figure 5 Test Circuit 1

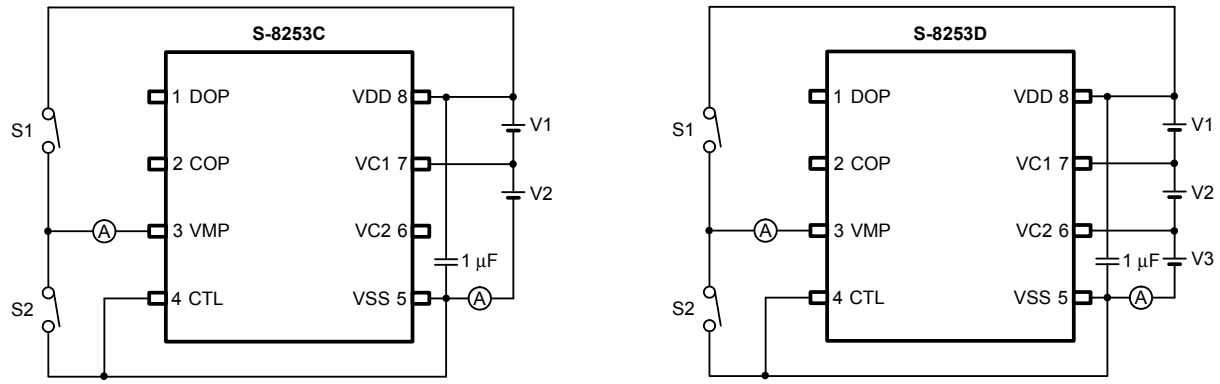

Figure 6 Test Circuit 2

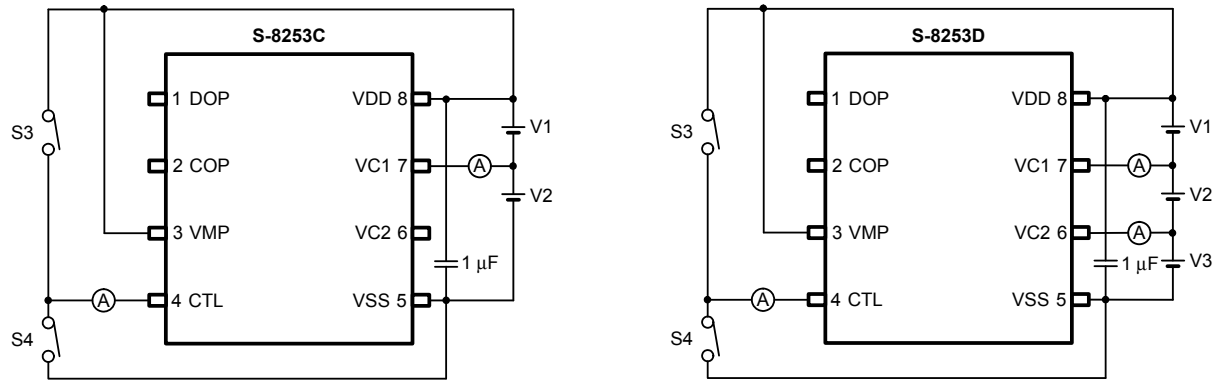

Figure 7 Test Circuit 3

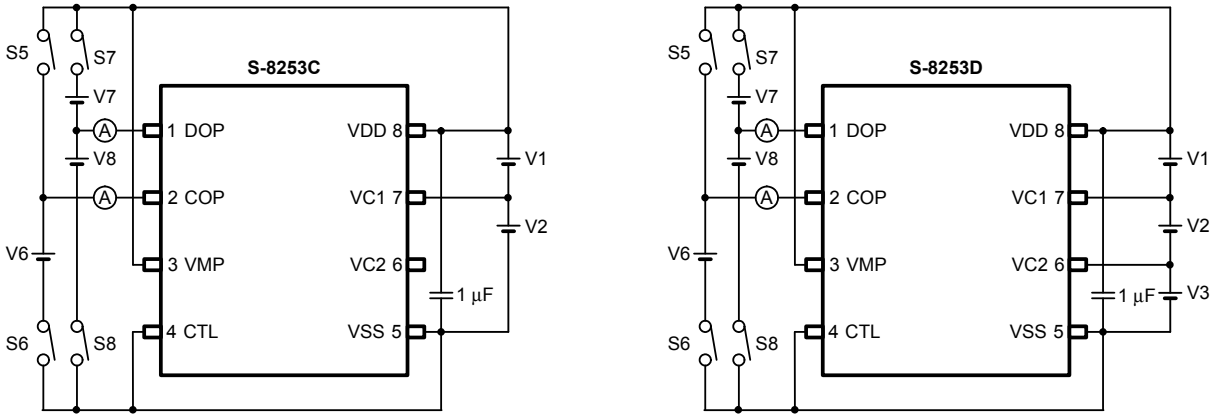

Figure 8 Test Circuit 4

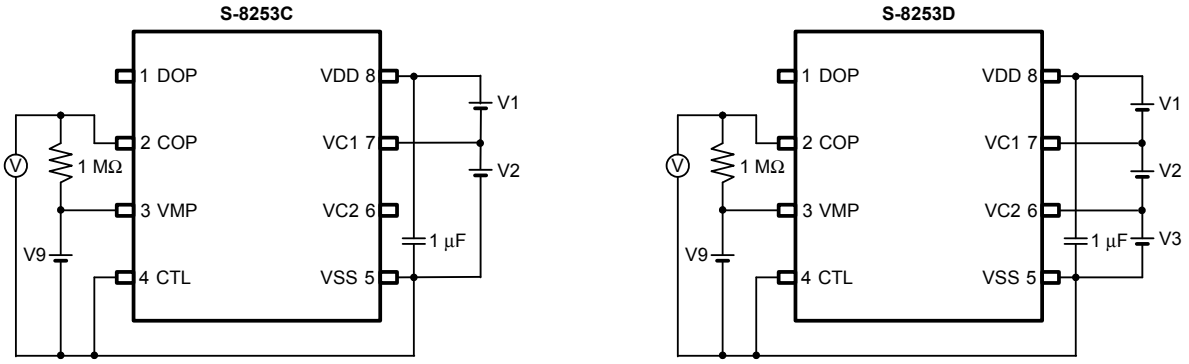

Figure 9 Test Circuit 5

■ Operation

Remark Refer to "■ **Battery Protection IC Connection Example**".

1. Normal Status

When the voltage of each of the batteries is in the range from V_{DLn} to V_{CUn} and the discharge current is lower than the specified value (the VMP pin voltage is higher than $V_{DD} - V_{IOV1}$), the charging and discharging FETs are turned on. This condition is called the normal status, and in this condition charging and discharging can be carried out freely.

Caution When the battery is connected for the first time, discharging may not be enabled. In this case, short the VMP pin and VDD pin or connect the charger to restore the normal status.

2. Overcharge Status

When the voltage of one of the batteries becomes higher than V_{CUn} and the state continues for t_{CU} or longer, the COP pin becomes high impedance. Because the COP pin is pulled up to the EB+ pin voltage by an external resistor, the charging FET is turned off to stop charging. This is called the overcharge status. The overcharge status is released when one of the following two conditions holds.

(1) The voltage of each of the batteries becomes V_{CLn} or lower.
(2) The voltage of each of the batteries is V_{CUn} or lower, and the VMP pin voltage is $V_{DD} - V_{IOV1}$ or lower (since the discharge current flows through the body diode of the charging FET immediately after discharging is started when the charger is removed and a load is connected, the VMP pin voltage momentarily decreases by approximately 0.6 V from the VDD pin voltage. The IC detects this voltage and releases the overcharging status).

3. Overdischarge Status

When the voltage of one of the batteries becomes lower than V_{DLn} and the state continues for t_{DL} or longer, the DOP pin voltage becomes V_{DD} level, and the discharging FET is turned off to stop discharging. This is called the overdischarge status.

3. 1 Power-down Function

When the overdischarge status is reached, the VMP pin is pulled down to the V_{SS} level by the internal R_{VMS} resistor of the IC. When the VMP pin voltage is 0.8 V typ. or lower, the power-down function starts to operate and almost every circuit in the S-8253C/D Series stops working. The conditions of each output pin are as follows.

(1) COP pin : High-Z
(2) DOP pin : V_{DD}

The power-down function is released when the following condition holds.

(1) The VMP pin voltage is 0.8 V typ. or higher.

The overdischarge status is released when the following two conditions hold.

(1) In case the VMP pin voltage is 0.8 V typ. or higher and the VMP pin voltage is lower than V_{DD}, the overdischarge status is released when the voltage of each of the batteries is V_{DUn} or higher.
(2) In case the VMP pin voltage is 0.8 V typ. or higher and the VMP pin voltage is V_{DD} or higher, the overdischarge status is released when the voltage of each of the batteries is V_{DLn} or higher (when a charger is connected and the VMP pin voltage is V_{DD} or higher, overdischarge hysteresis is released and discharge control FET is turned on at V_{DLn}).

4. Overcurrent Status

The S-8253C/D Series has three overcurrent detection levels (V_{IOV1}, V_{IOV2}, and V_{IOV3}) and three overcurrent detection delay times (t_{IOV1}, t_{IOV2}, and t_{IOV3}) corresponding to each overcurrent detection level. When the discharging current becomes higher than the specified value (the difference of the voltages of the VMP pin and VDD pin is greater than V_{IOV1}) and the state continues for t_{IOV1} or longer, the S-8253C/D Series enters the overcurrent status, in which the DOP pin voltage becomes V_{DD} level to turn off the discharging FET to stop discharging, the COP pin becomes high impedance and is pulled up to the EB+ pin voltage to turn off the charging FET to stop charging, and the VMP pin is pulled up to the V_{DD} voltage by the internal resistor (R_{VMD}). Operation of overcurrent detection levels 2, 3 (V_{IOV2}, V_{IOV3}) and overcurrent detection delay times 2, 3 (t_{IOV2}, t_{IOV3}) are the same as for V_{IOV1} and t_{IOV1}. The overcurrent status is released when the following condition holds.

(1) The VMP pin voltage is $V_{DD} - V_{IOV1}$ or higher because a charger is connected or the load is released.

Caution The impedance that enables automatic restoration varies depending on the battery voltage and set value of overcurrent detection voltage 1.

5. 0 V Battery Charge Function

Regarding the charging of a self-discharged battery (0 V battery), the S-8253C/D Series has two functions from which one should be selected.

(1) 0 V battery charging is allowed (0 V battery charging is available.)
When the charger voltage is higher than V_{0CHA}, the 0 V battery can be charged.

(2) 0 V battery charging is inhibited (0 V battery charging is unavailable.)
When the battery voltage is V_{0INH} or lower, the 0 V battery cannot be charged.

Caution When the VDD pin voltage is lower than the minimum value of V_{DSOP}, the operation of the S-8253C/D Series is not guaranteed.

6. Delay Circuit

The following detection delay times are determined by dividing a clock of approximately 3.57 kHz by the counter.

(Example) Oscillator clock cycle (T_{CLK}) : 280 μs
Overcharge detection delay time (t_{CU}) : 1.15 s
Overdischarge detection delay time (t_{DL}) : 144 ms
Overcurrent detection delay time 1 (t_{IOV1}) : 9 ms
Overcurrent detection delay time 2 (t_{IOV2}) : 4.5 ms

Remark The overcurrent detection delay time 2 (t_{IOV2}) and overcurrent detection delay time 3 (t_{IOV3}) start when the overcurrent detection voltage 1 (V_{IOV1}) is detected. As soon as the overcurrent detection voltage 2 (V_{IOV2}) or overcurrent detection voltage 3 (V_{IOV3}) is detected over the detection delay time for overcurrent 2 (t_{IOV2}) or overcurrent 3 (t_{IOV3}) after the detection of overcurrent 1 (V_{IOV1}), the S-8253C/D Series turns the discharging control FET off within t_{IOV2} or t_{IOV3} of each detection.

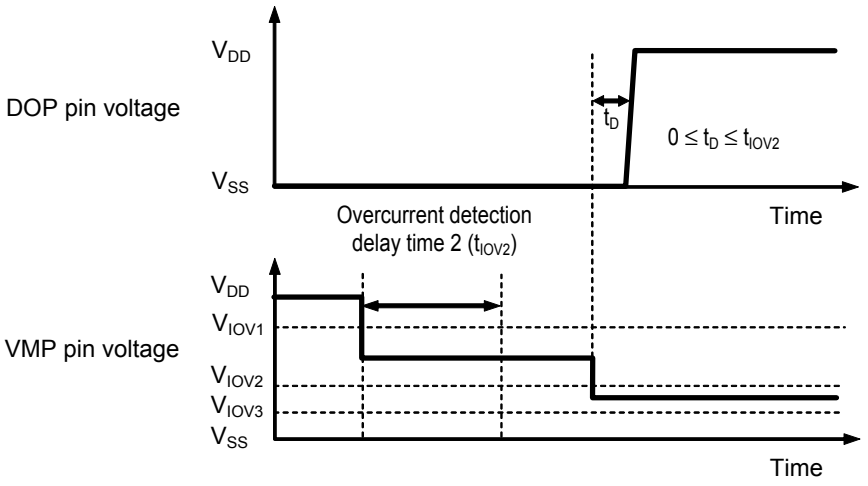

Figure 10

7. CTL Pin

The S-8253C/D Series has a control pin for charge / discharge control and shortening test time. The levels, "L", "H", and "M", of the voltage input to the CTL pin determine the status of the S-8253C/D Series: normal operation, charge / discharge inhibition, or test time reduction. The CTL pin takes precedence over the battery protection circuit. During normal use, short the CTL pin and VSS pin.

Table 10 Conditions Set by CTL Pin

CTL Pin Potential	Status of IC	COP Pin	DOP Pin
Open	Charge / discharge inhibited status	High-Z	V_{DD}
High ($V_{CTL} \geq V_{CTLH}$)	Charge / discharge inhibited status	High-Z	V_{DD}
Middle ($V_{CTLL} < V_{CTL} < V_{CTLH}$)	Status to shorten delay time *1	(*2)	(*2)
Low ($V_{CTLL} \geq V_{CTL}$)	Normal status	(*2)	(*2)

***1.** In this status that delay time is shortened, only the overcharge detection delay time is shortened in 1/60 to 1/30.
***2.** The pin status is controlled by the voltage detection circuit.

Caution 1. If the potential of the CTL pin is middle, overcurrent detection voltage 1 (V_{IOV1}) does not operate.
2. If you use the middle potential of the CTL pin, contact ABLIC Inc. marketing department.
3. Please note unexpected behavior might occur when electrical potential difference between the CTL pin ("L" level) and VSS is generated through the external filter (R_{VSS} and C_{VSS}) as a result of input voltage fluctuations.

■ Timing Charts

1. Overcharge Detection and Overdischarge Detection

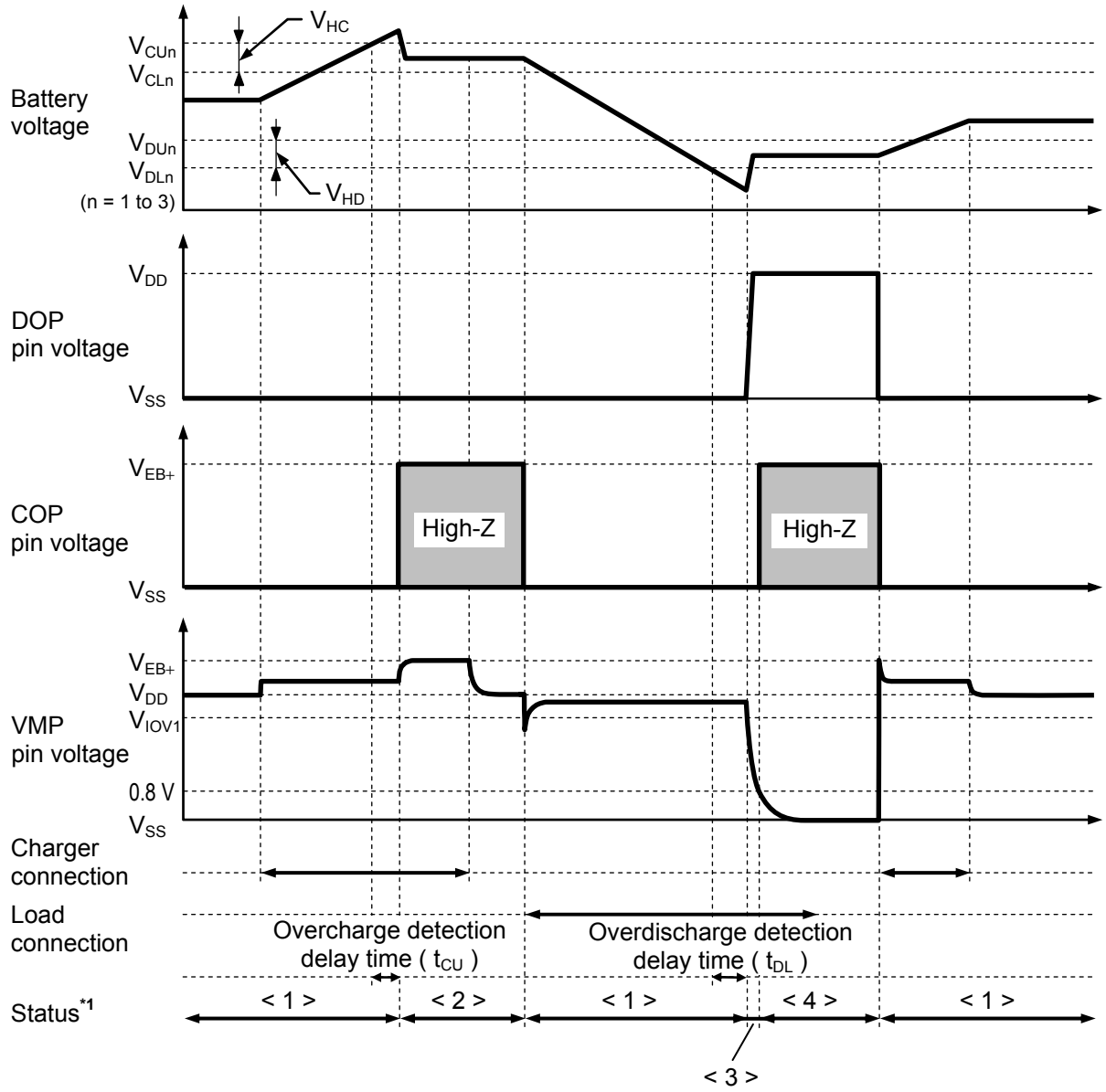

***1.** < 1 > : Normal status
< 2 > : Overcharge status
< 3 > : Overdischarge status
< 4 > : Power-down status

Remark The charger is assumed to charge with a constant current. V_{EB+} indicates the open voltage of the charger.

Figure 11

2. Overcurrent Detection

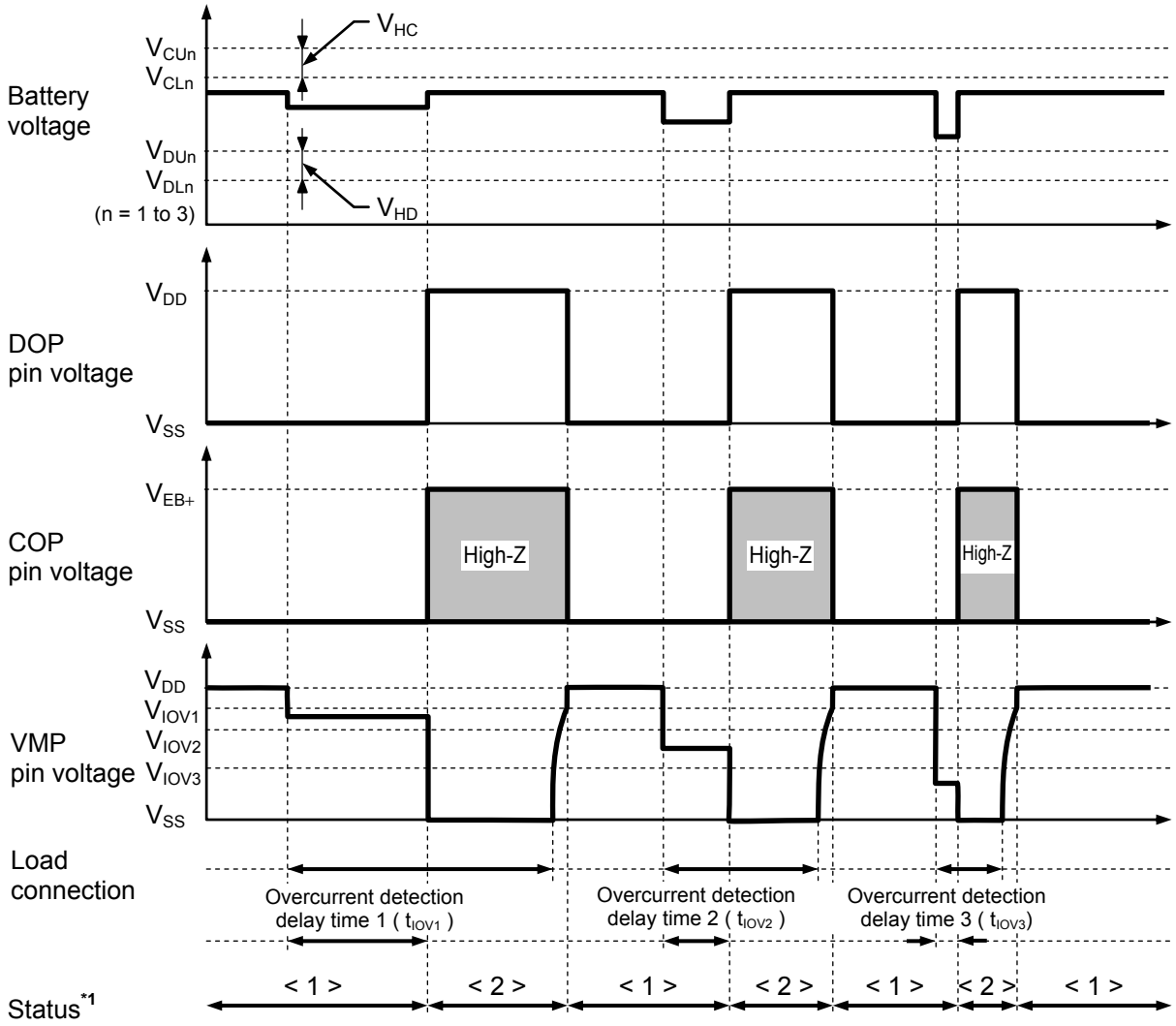

***1.** < 1 > : Normal status
< 2 > : Overcurrent status

Remark The charger is assumed to charge with a constant current. V_{EB+} indicates the open voltage of the charger.

Figure 12

■ Battery Protection IC Connection Examples

1. S-8253C Series

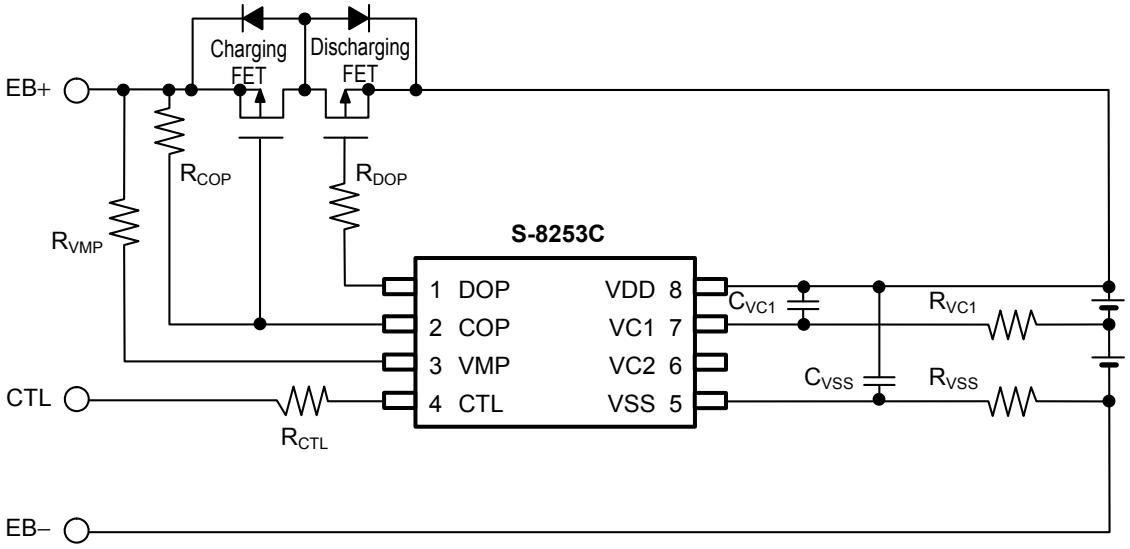

Figure 13

2. S-8253D Series

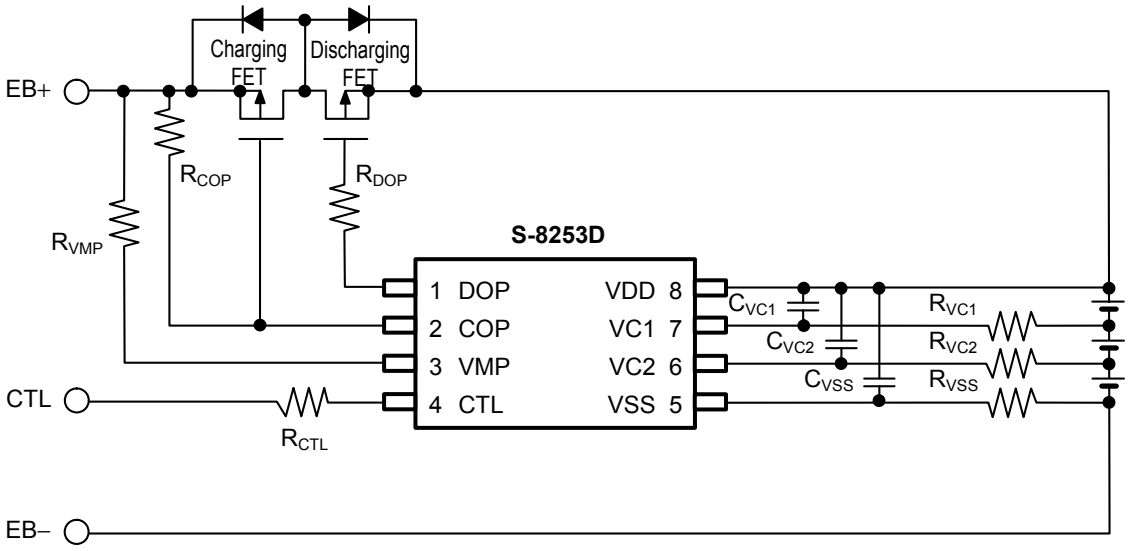

Figure 14

Table 11 Constants for External Components

No.	Symbol	Typ.	Range	Unit
1	R_{VC1}	1	0.51 to 1*1	kΩ
2	R_{VC2}	1	0.51 to 1*1	kΩ
3	R_{DOP}	5.1	2 to 10	kΩ
4	R_{COP}	1	0.1 to 1	MΩ
5	R_{VMP}	5.1	1 to 10	kΩ
6	R_{CTL}	1	1 to 100	kΩ
7	R_{VSS}	51	5.1 to 51*1	Ω
8	C_{VC1}	0.1	0.1 to 0.47*1	μF
9	C_{VC2}	0.1	0.1 to 0.47*1	μF
10	C_{VSS}	2.2	1 to 10*1	μF

***1.** Please set up a filter constant to be $R_{VSS} \times C_{VSS} \geq 51\ \mu F \bullet \Omega$ and to be $R_{VC1} \times C_{VC1} = R_{VC2} \times C_{VC2} = R_{VSS} \times C_{VSS}$.

Caution 1. The above constants may be changed without notice.

2. It has not been confirmed whether the operation is normal or not in circuits other than the above example of connection. In addition, the example of connection shown above and the constant do not guarantee proper operation. Perform thorough evaluation using the actual application to set the constant.

■ Precautions

- The application conditions for the input voltage, output voltage, and load current should not exceed the package power dissipation.
- Batteries can be connected in any order, however, there may be cases when discharging cannot be performed when a battery is connected. In this case, short the VMP pin and VDD pin or connect the battery charger to return to the normal mode.
- Do not apply an electrostatic discharge to this IC that exceeds the performance ratings of the built-in electrostatic protection circuit.
- ABLIC Inc. claims no responsibility for any disputes arising out of or in connection with any infringement by products including this IC of patents owned by a third party.

■ Characteristics (Typical Data)

1. Current Consumption

1. 1 I_{OPE} vs. V_{DD}

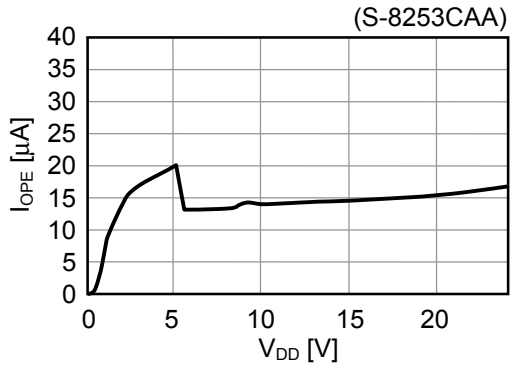

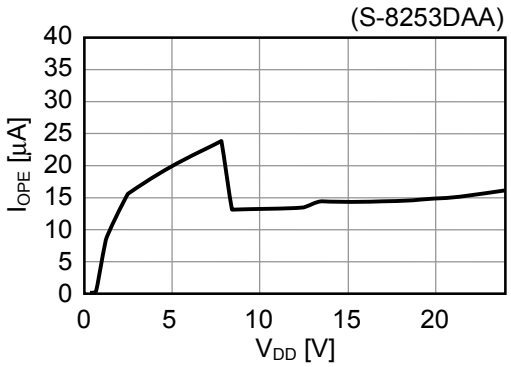

1. 2 I_{OPE} vs. Ta

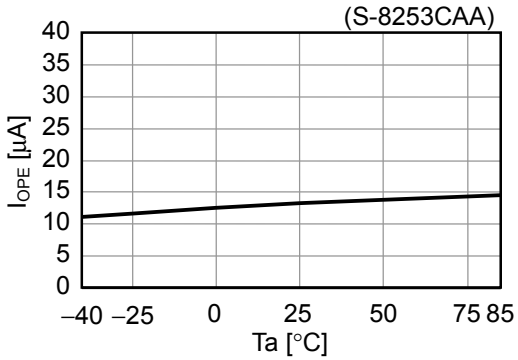

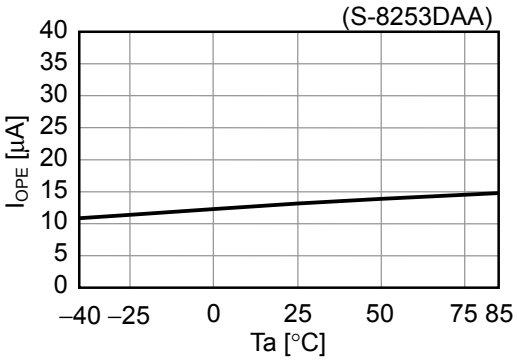

1. 3 I_{PDN} vs. V_{DD}

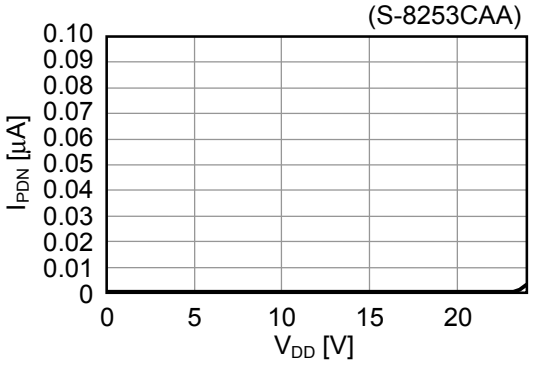

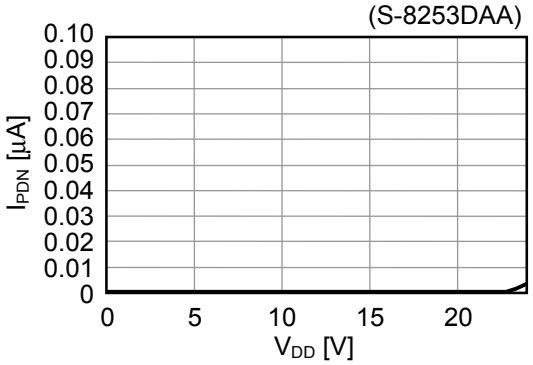

1. 4 I_{PDN} vs. Ta

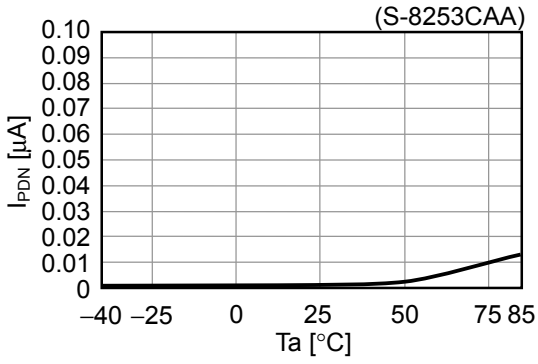

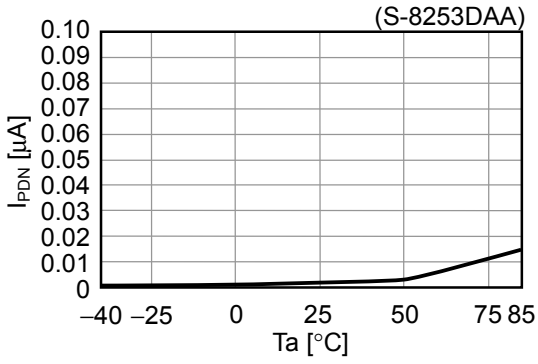

2. Overcharge Detection / Release Voltage, Overdischarge Detection / Release Voltage, Overcurrent Detection Voltage, and Delay Times (S-8253CAA, S-8253DAA)

2. 1 V_{CU} vs. Ta

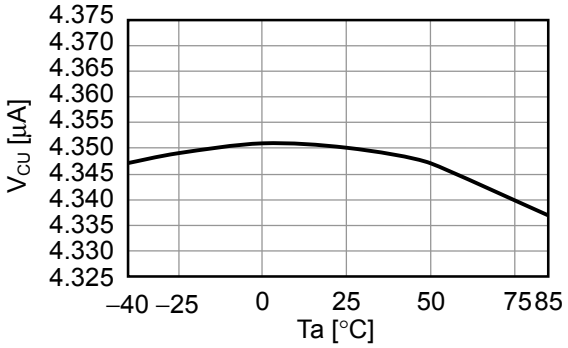

2. 2 V_{CL} vs. Ta

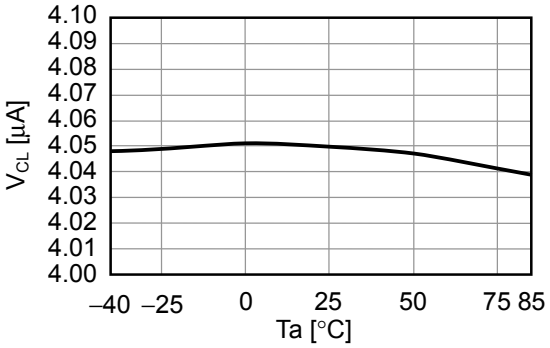

2. 3 V_{DU} vs. Ta

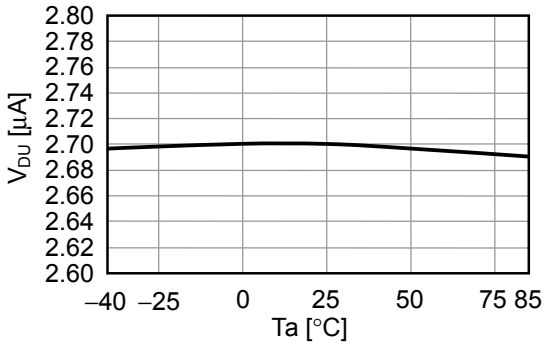

2. 4 V_{DL} vs. Ta

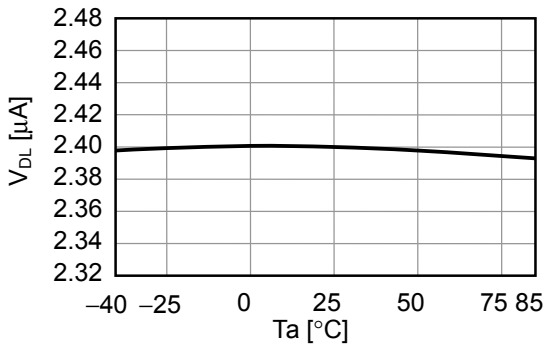

2. 5 t_{CU} vs. Ta

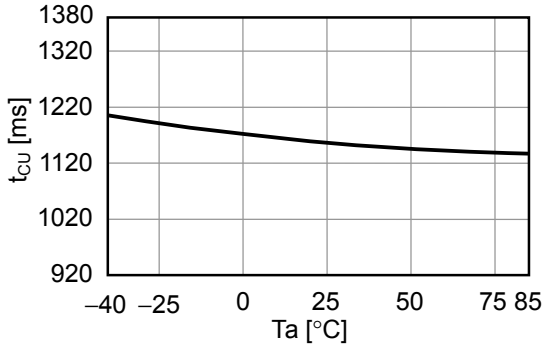

2. 6 t_{DL} vs. Ta

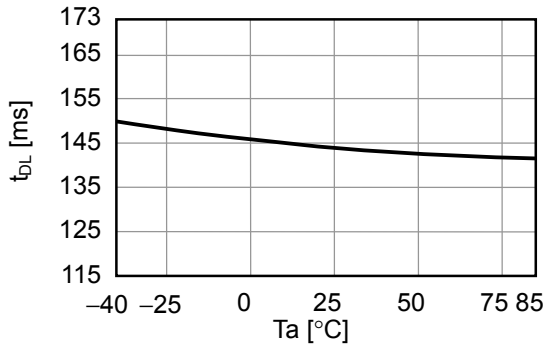

2. 7 V_{IOV1} vs. V_{DD}

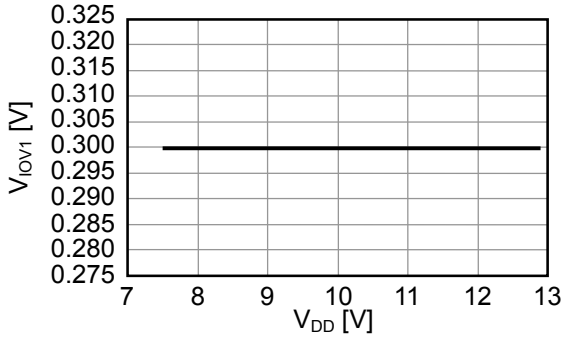

2. 8 V_{IOV1} vs. Ta

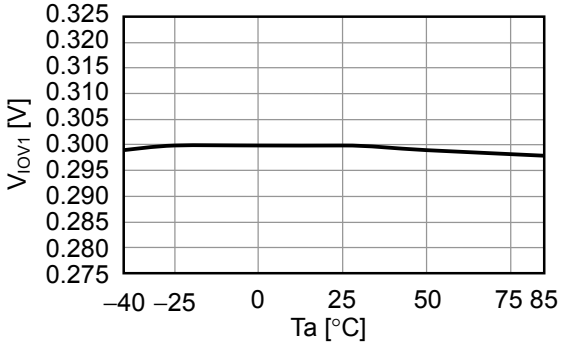

2. 9 V_{IOV2} vs. V_{DD}

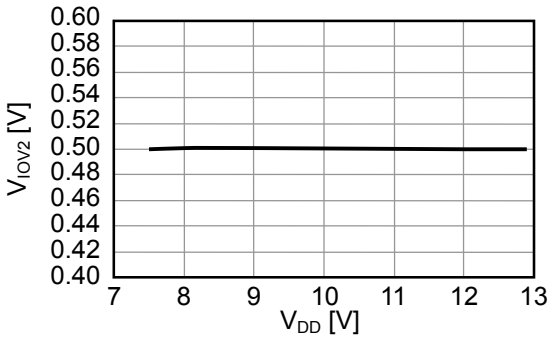

2. 10 V_{IOV2} vs. Ta

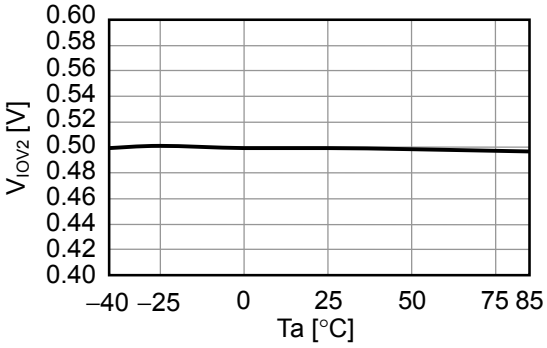

2. 11 V_{IOV3} vs. V_{DD}

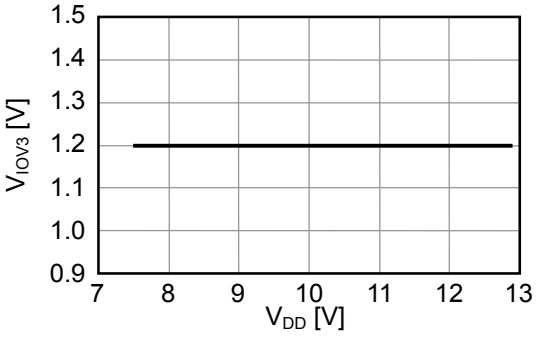

2. 12 V_{IOV3} vs. Ta

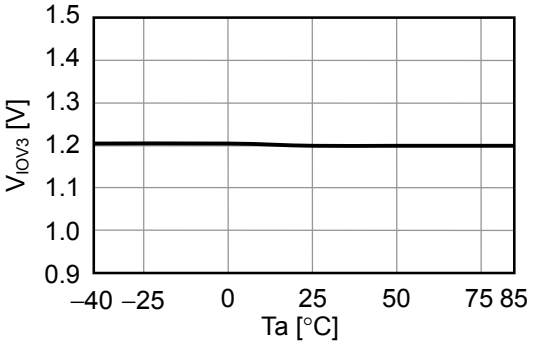

2. 13 t_{IOV1} vs. V_{DD}

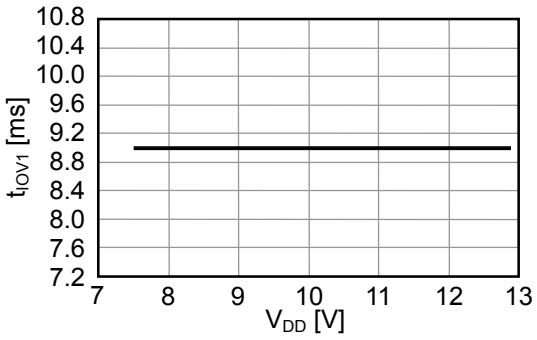

2. 14 t_{IOV1} vs. Ta

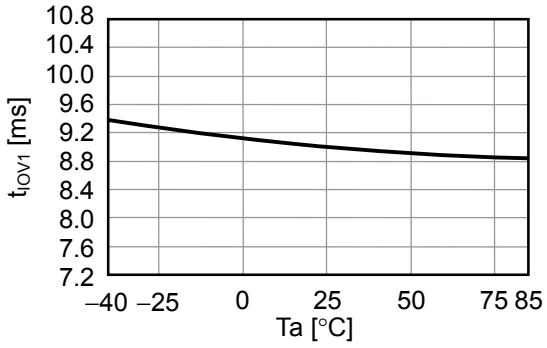

2. 15 t_{IOV2} vs. V_{DD}

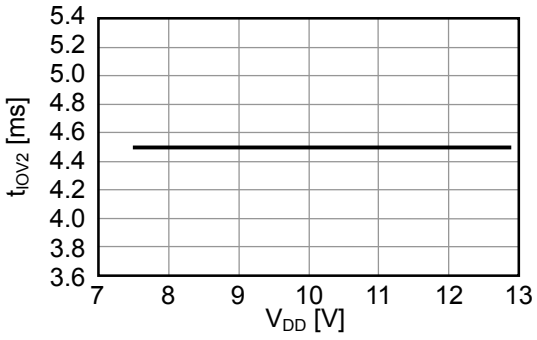

2. 16 t_{IOV2} vs. Ta

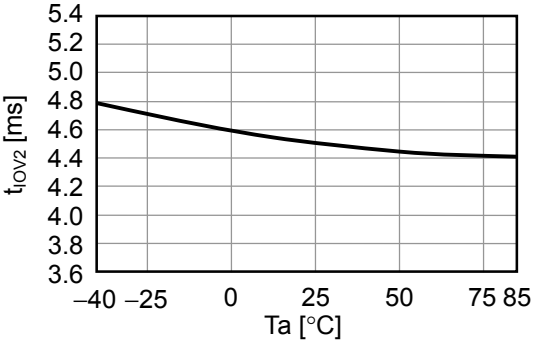

2. 17 t_{IOV3} vs. V_{DD}

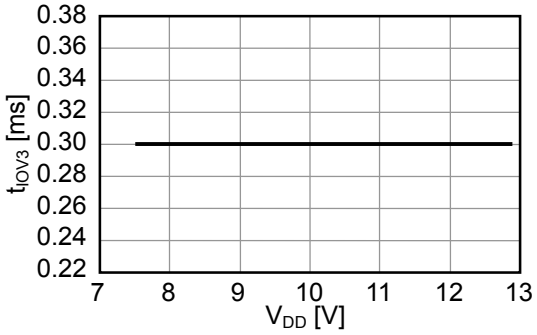

2. 18 t_{IOV3} vs. Ta

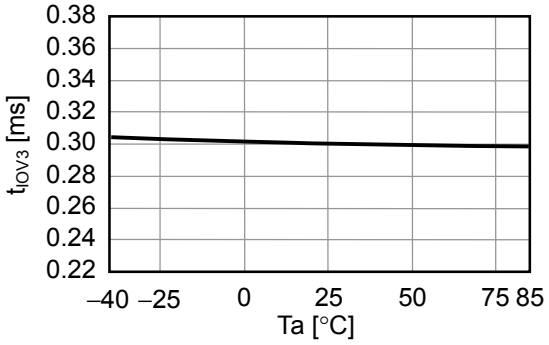

3. COP / DOP Pin (S-8253CAA, S-8253DAA)

3. 1 I_{COH} vs. V_{COP}

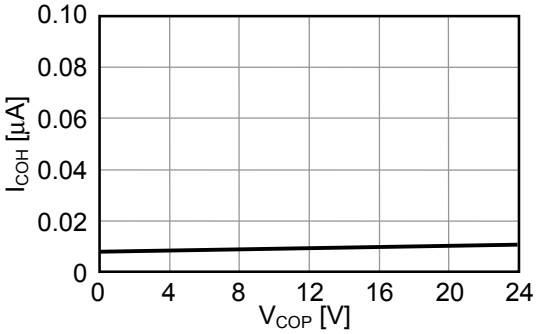

3. 2 I_{COL} vs. V_{COP}

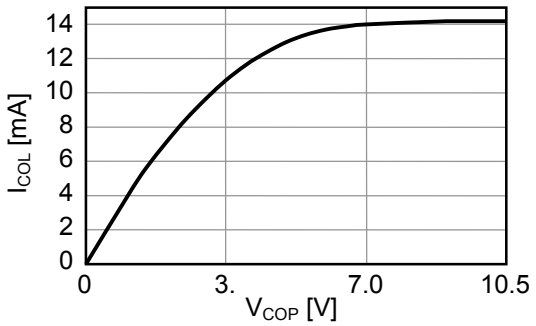

3. 3 I_{DOH} vs. V_{DOP}

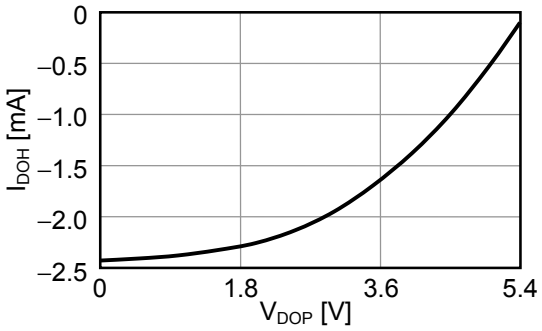

3. 4 I_{DOL} vs. V_{DOP}

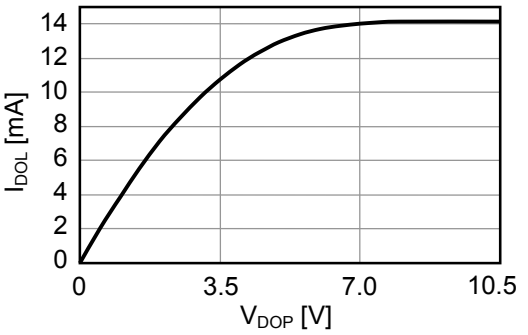

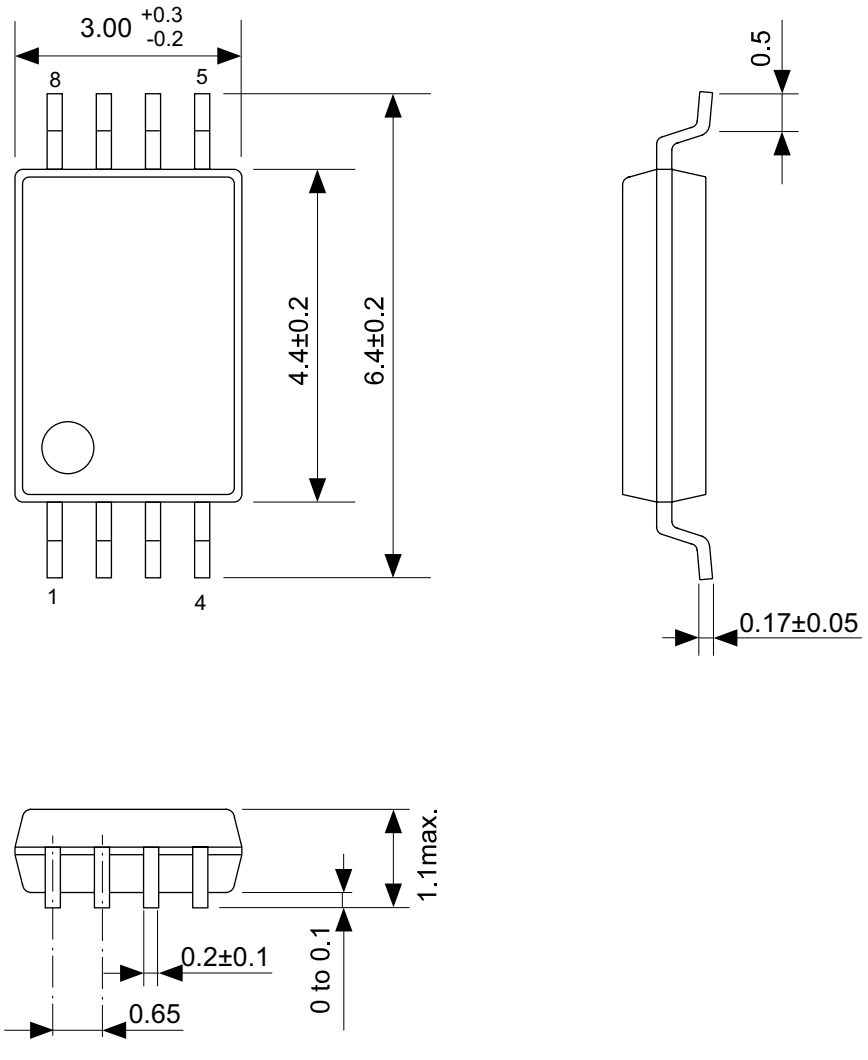

No. FT008-A-P-SD-1.2

TITLE	TSSOP8-E-PKG Dimensions
No.	FT008-A-P-SD-1.2
ANGLE	
UNIT	mm

ABLIC Inc.

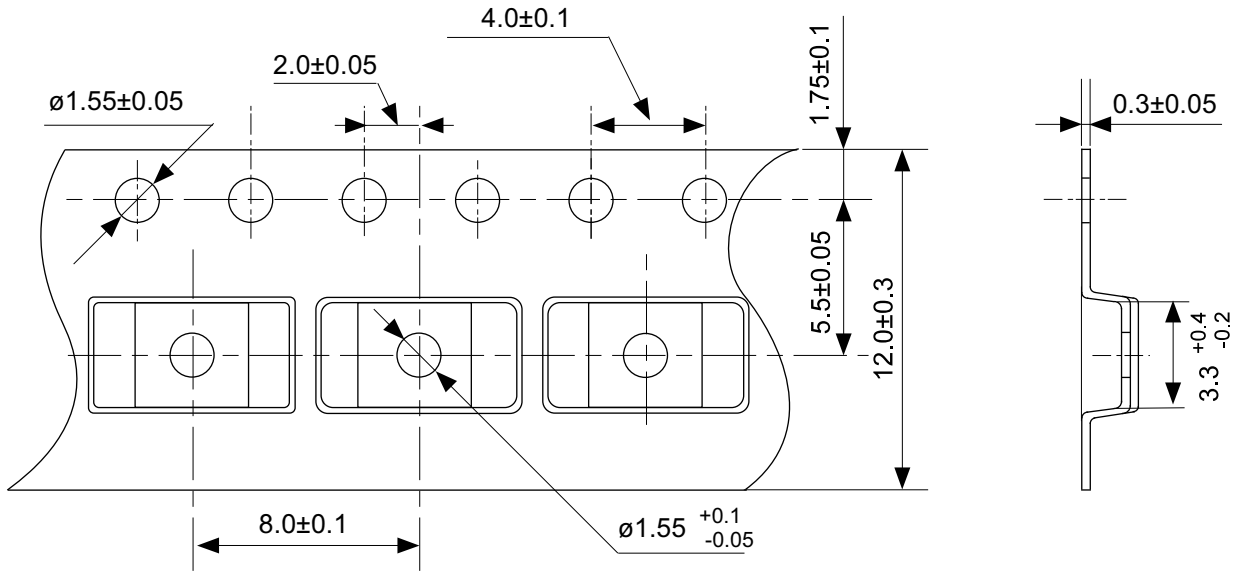

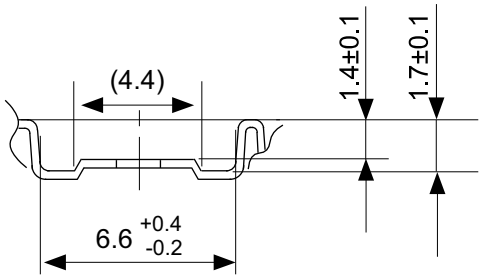

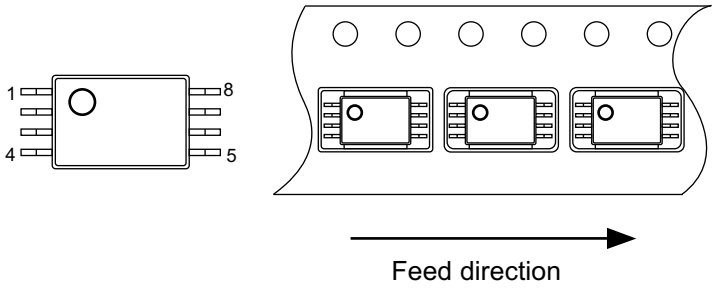

No. FT008-E-C-SD-1.0

TITLE	TSSOP8-E-Carrier Tape
No.	FT008-E-C-SD-1.0
ANGLE	
UNIT	mm
ABLIC Inc.	

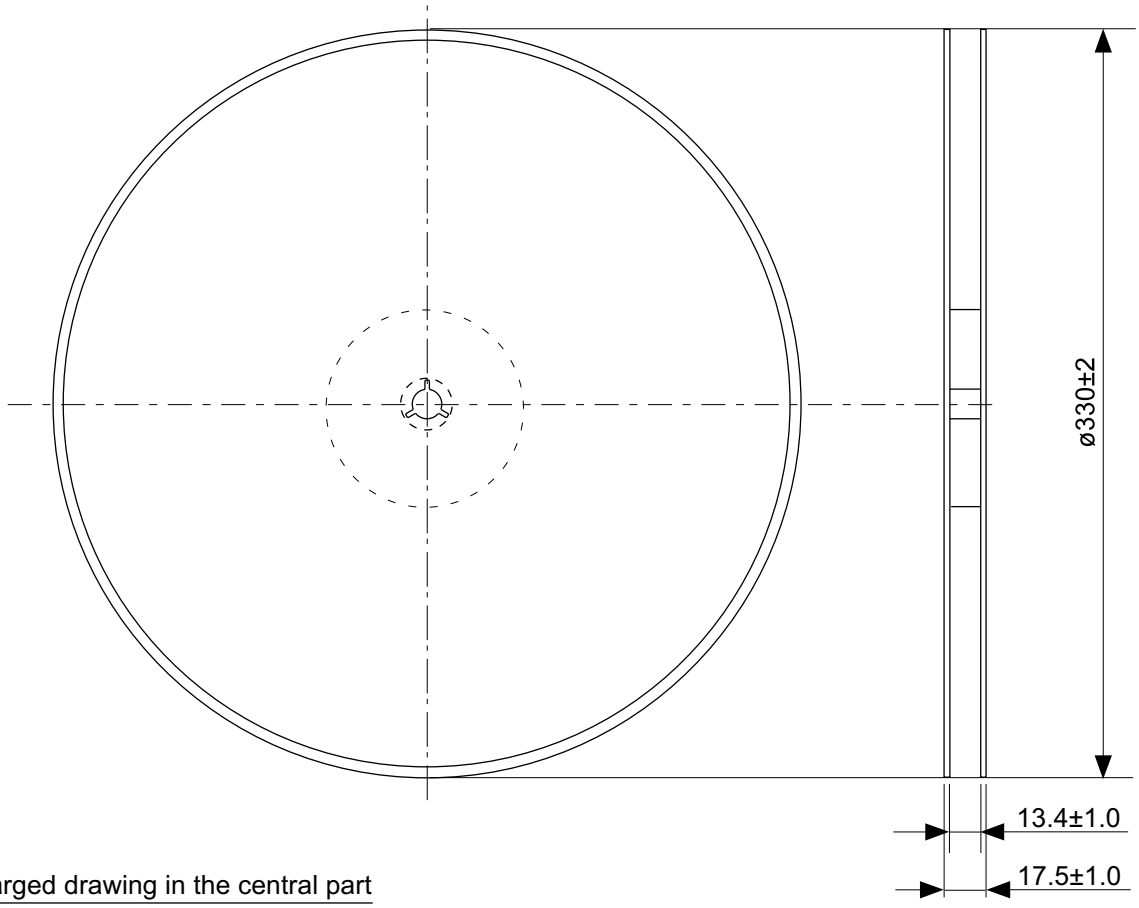

Enlarged drawing in the central part

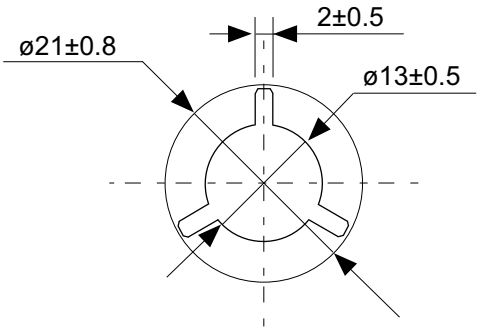

No. FT008-E-R-SD-1.0

TITLE	TSSOP8-E-Reel		
No.	FT008-E-R-SD-1.0		
ANGLE		QTY.	3,000
UNIT	mm		
ABLIC Inc.			

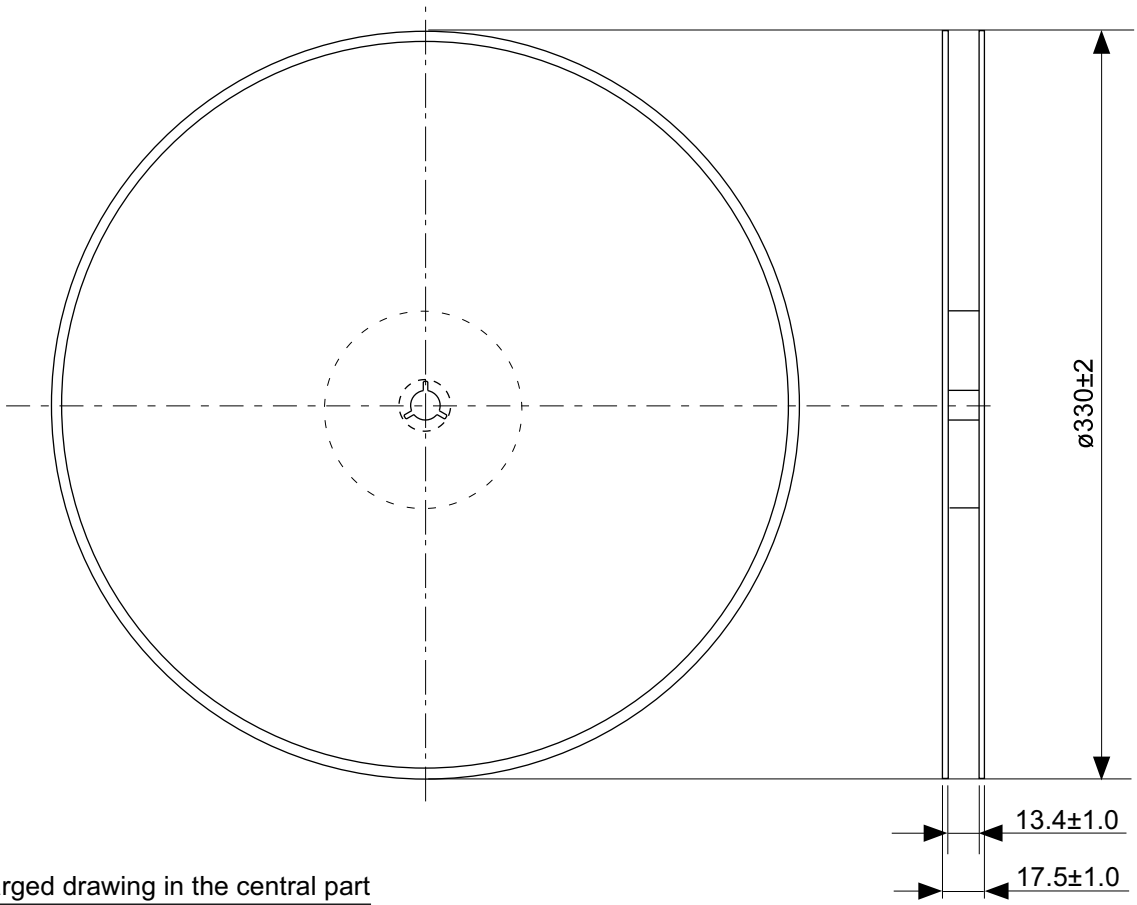

Enlarged drawing in the central part

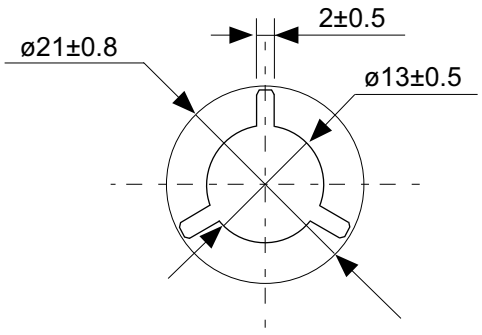

No. FT008-E-R-S1-1.0

TITLE	TSSOP8-E-Reel		
No.	FT008-E-R-S1-1.0		
ANGLE		QTY.	4,000
UNIT	mm		
ABLIC Inc.			

Disclaimers (Handling Precautions)

1. All the information described herein (product data, specifications, figures, tables, programs, algorithms and application circuit examples, etc.) is current as of publishing date of this document and is subject to change without notice.
2. The circuit examples and the usages described herein are for reference only, and do not guarantee the success of any specific mass-production design.
   ABLIC Inc. is not liable for any losses, damages, claims or demands caused by the reasons other than the products described herein (hereinafter "the products") or infringement of third-party intellectual property right and any other right due to the use of the information described herein.
3. ABLIC Inc. is not liable for any losses, damages, claims or demands caused by the incorrect information described herein.
4. Be careful to use the products within their ranges described herein. Pay special attention for use to the absolute maximum ratings, operation voltage range and electrical characteristics, etc.
   ABLIC Inc. is not liable for any losses, damages, claims or demands caused by failures and / or accidents, etc. due to the use of the products outside their specified ranges.
5. Before using the products, confirm their applications, and the laws and regulations of the region or country where they are used and verify suitability, safety and other factors for the intended use.
6. When exporting the products, comply with the Foreign Exchange and Foreign Trade Act and all other export-related laws, and follow the required procedures.
7. The products are strictly prohibited from using, providing or exporting for the purposes of the development of weapons of mass destruction or military use. ABLIC Inc. is not liable for any losses, damages, claims or demands caused by any provision or export to the person or entity who intends to develop, manufacture, use or store nuclear, biological or chemical weapons or missiles, or use any other military purposes.
8. The products are not designed to be used as part of any device or equipment that may affect the human body, human life, or assets (such as medical equipment, disaster prevention systems, security systems, combustion control systems, infrastructure control systems, vehicle equipment, traffic systems, in-vehicle equipment, aviation equipment, aerospace equipment, and nuclear-related equipment), excluding when specified for in-vehicle use or other uses by ABLIC, Inc. Do not apply the products to the above listed devices and equipments.
   ABLIC Inc. is not liable for any losses, damages, claims or demands caused by unauthorized or unspecified use of the products.
9. In general, semiconductor products may fail or malfunction with some probability. The user of the products should therefore take responsibility to give thorough consideration to safety design including redundancy, fire spread prevention measures, and malfunction prevention to prevent accidents causing injury or death, fires and social damage, etc. that may ensue from the products' failure or malfunction.
   The entire system in which the products are used must be sufficiently evaluated and judged whether the products are allowed to apply for the system on customer's own responsibility.
10. The products are not designed to be radiation-proof. The necessary radiation measures should be taken in the product design by the customer depending on the intended use.
11. The products do not affect human health under normal use. However, they contain chemical substances and heavy metals and should therefore not be put in the mouth. The fracture surfaces of wafers and chips may be sharp. Be careful when handling these with the bare hands to prevent injuries, etc.
12. When disposing of the products, comply with the laws and ordinances of the country or region where they are used.
13. The information described herein contains copyright information and know-how of ABLIC Inc. The information described herein does not convey any license under any intellectual property rights or any other rights belonging to ABLIC Inc. or a third party. Reproduction or copying of the information from this document or any part of this document described herein for the purpose of disclosing it to a third-party is strictly prohibited without the express permission of ABLIC Inc.
14. For more details on the information described herein or any other questions, please contact ABLIC Inc.'s sales representative.
15. This Disclaimers have been delivered in a text using the Japanese language, which text, despite any translations into the English language and the Chinese language, shall be controlling.

2.4-2019.07

ENTEGRECİ

Bu belge www.entegreci.com üzerinden sunulmaktadır.

Elektronik komponent tedarikinde Entegreci

Entegreci, Eskişehir merkezli, Türkiye geneline satış yapan bir elektronik komponent mağazasıdır. Entegreler (IC), mikrodenetleyiciler, transistörler, diyotlar, pasif elemanlar, konnektörler, modüller ve geliştirme kartları tek adetten seri üretim adetlerine kadar satılır. Ürün sayfalarında güncel stok durumunu, fiyatı ve datasheet bağlantısını bulabilirsiniz.

Parça koduyla arama

Üretici parça numarasını yazın; stok ve fiyatı hemen görün.

www.entegreci.com

Ürün kategorileri

Entegreden kapasitöre tüm elektronik komponent kategorileri.

Kategorilere göz atın

Üreticiler

Aradığınız üreticinin ürünlerini tek sayfada inceleyin.

Üreticileri görün

Toplu alım ve teklif

Listede olmayan ya da yüksek adetli parçalar için teklif isteyin.

Teklif isteyin

www.entegreci.com | **destek@entegreci.com** | **0850 305 90 34**

Entegreci is an online electronic components store based in Türkiye. Search by manufacturer part number to see stock, prices and datasheets for integrated circuits, microcontrollers, transistors, passive components and connectors, or request a quote for parts that are not listed.

Bu sayfa Entegreci tarafından eklenmiştir. Belgenin önceki sayfaları asıl yayıncısına aittir ve içeriği değiştirilmemiştir; en güncel sürüm için belgenin yayıncısına başvurun.