# S-8250A Series

## BATTERY PROTECTION IC WITH DISCHARGE CONTROL FUNCTION FOR 1-CELL PACK

www.ablic.com

© ABLIC Inc., 2013-2016



NOT RECOMMENDED FOR NEW DESIGN

The S-8250A Series is a protection IC for 1-cell lithium-ion / lithium polymer rechargeable batteries and includes high-accuracy voltage detection circuits and delay circuits.
The S-8250A Series is suitable for protecting 1-cell lithium-ion / lithium polymer rechargeable battery packs from overcharge, overdischarge, overcurrent, and controlling discharge by external signal. By adjusting power supply voltage dependency of discharge overcurrent detection voltage in accordance with ON resistance of the charge-discharge control FET, the S-8250A Series realizes high-accuracy discharge overcurrent detection.

## ■ Features

- High-accuracy discharge overcurrent detection circuit
  - Discharge overcurrent detection voltage: 0.050 V to 0.150 V (1 mV step) — Accuracy ±10 mV (Ta = +25°C)
  - (Power supply voltage dependency can be set in accordance with ON resistance of the charge-discharge control FET.)
- High-accuracy voltage detection circuit
  - Overcharge detection voltage: 4.100 V to 4.600 V (5 mV step) — Accuracy ±20 mV (Ta = +25°C); Accuracy ±25 mV (Ta = −10°C to +60°C)
  - Overcharge release voltage: 3.700 V to 4.600 V*1 — Accuracy ±30 mV
  - Overdischarge detection voltage: 2.000 V to 2.800 V (10 mV step) — Accuracy ±50 mV
  - Overdischarge release voltage: 2.000 V to 3.000 V*2 — Accuracy ±100 mV
  - Load short-circuiting detection voltage: 0.250 V to 0.500 V (50 mV step) — Accuracy ±50 mV
  - Charge overcurrent detection voltage: −0.200 V to −0.025 V (25 mV step) — Accuracy ±15 mV
- Detection delay times are generated only by an internal circuit (External capacitors are unnecessary).
- Discharge control function
  - CTL pin control logic is selectable: Active "H", active "L"
  - CTL pin internal resistance connection is selectable: Pull-up, pull-down
  - CTL pin internal resistance value is selectable: 1.0 MΩ, 2.0 MΩ, 3.0 MΩ, 4.0 MΩ, 5.0 MΩ
  - Discharge inhibition status latch function is selectable: Available, unavailable
- 0 V battery charge function is selectable: Available, unavailable
- Power-down function is selectable: Available, unavailable
- Release condition of discharge overcurrent status is selectable: Load disconnection, charger connection
- High-withstand voltage: VM pin and CO pin: Absolute maximum rating 28 V
- Wide operation temperature range: Ta = −40°C to +85°C
- Low current consumption
  - During operation: 2.0 μA typ., 4.0 μA max. (Ta = +25°C)
  - During power-down: 50 nA max. (Ta = +25°C)
- Lead-free (Sn 100%), halogen-free

***1.** Overcharge release voltage = Overcharge detection voltage − Overcharge hysteresis voltage
(Overcharge hysteresis voltage can be selected from a range of 0 V to 0.4 V in 50 mV step.)
***2.** Overdischarge release voltage = Overdischarge detection voltage + Overdischarge hysteresis voltage
(Overdischarge hysteresis voltage can be selected from a range of 0 V to 0.7 V in 100 mV step.)

## ■ Applications

- Lithium-ion rechargeable battery pack
- Lithium polymer rechargeable battery pack

## ■ Package

- SNT-6A

## ■ Block Diagram

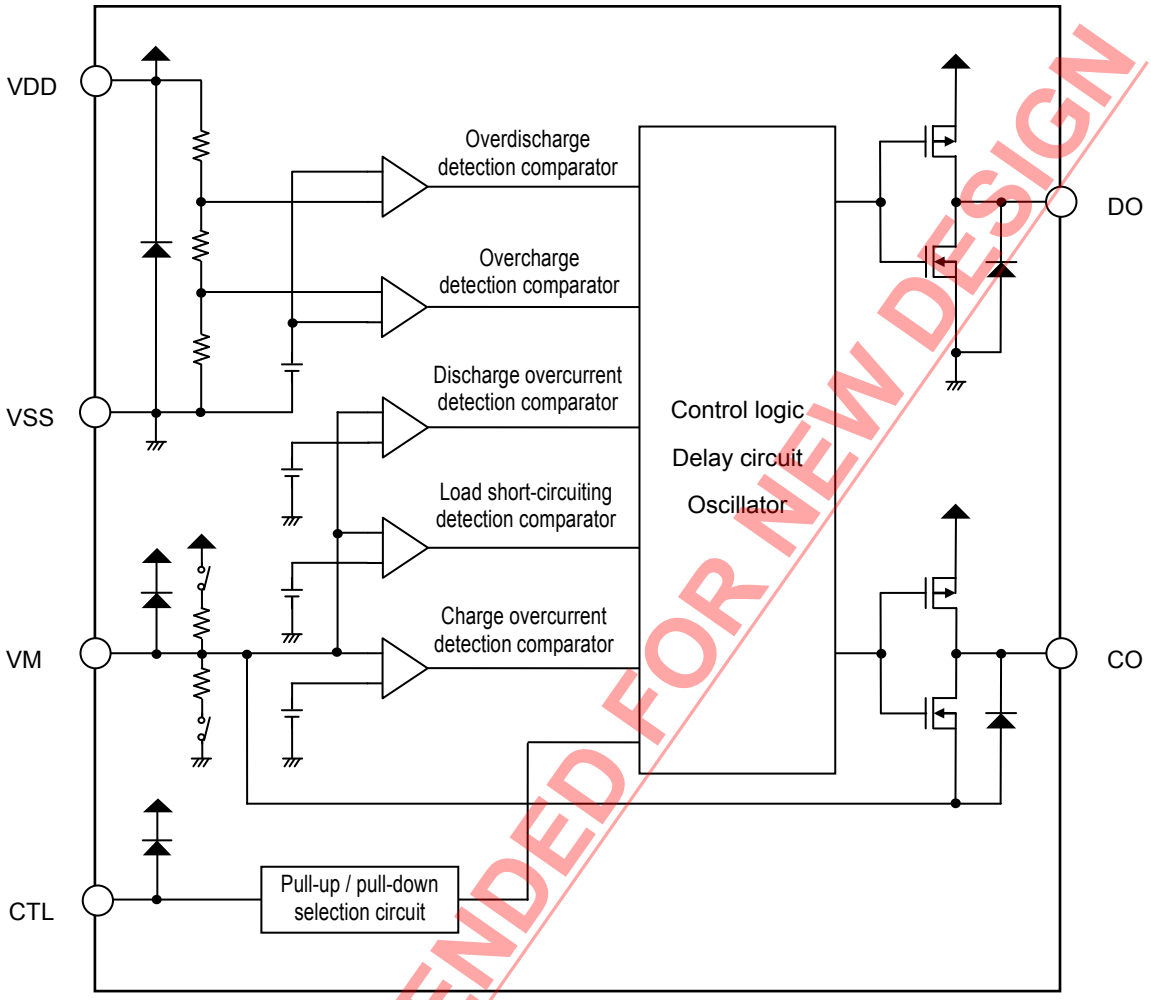


**Remark** All the diodes shown in the figure are parasitic diodes.

**Figure 1**

NOT RECOMMENDED FOR NEW DESIGN

## ■ Product Name Structure

### 1. Product name

S-8250A xx - I6T1 U

- Environmental code
  - U: Lead-free (Sn 100%), halogen-free
- Package abbreviation and IC packing specifications*1
  - I6T1: SNT-6A, Tape
- Serial code*2
  - Sequentially set from AA to ZZ

*1. Refer to the tape drawing.
*2. Refer to "3. Product name list".

### 2. Package

**Table 1 Package Drawing Codes**

| Package Name | Dimension | Tape | Reel | Land |
|---|---|---|---|---|
| SNT-6A | PG006-A-P-SD | PG006-A-C-SD | PG006-A-R-SD | PG006-A-L-SD |

### 3. Product name list

#### 3. 1 SNT-6A

**Table 2 (1 / 2)**

| Product Name | Overcharge Detection Voltage [$V_{CU}$] | Overcharge Release Voltage [$V_{CL}$] | Overdischarge Detection Voltage [$V_{DL}$] | Overdischarge Release Voltage [$V_{DU}$] | Delay Time Combination*1 | Function Combination*2 |
|---|---|---|---|---|---|---|
| S-8250AAB-I6T1U | 4.280 V | 4.180 V | 2.300 V | 2.300 V | (1) | (1) |
| S-8250AAE-I6T1U | 4.410 V | 4.210 V | 2.300 V | 2.300 V | (2) | (2) |
| S-8250AAG-I6T1U | 4.425 V | 4.225 V | 2.500 V | 2.500 V | (1) | (3) |

**Table 2 (2 / 2)**

| Product Name | Discharge Overcurrent Detection Voltage [$V_{DIOV}$] | | | Load Short-circuiting Detection Voltage [$V_{SHORT}$] | Charge Overcurrent Detection Voltage [$V_{CIOV}$] |
|---|---|---|---|---|---|
| | $V_{DD}$ = 3.0 V | $V_{DD}$ = 3.4 V | $V_{DD}$ = 4.0 V | | |
| S-8250AAB-I6T1U | 0.122 V | 0.113 V | 0.104 V | 0.500 V | −0.100 V |
| S-8250AAE-I6T1U | 0.037 V | 0.036 V | 0.034 V | 0.500 V | −0.075 V |
| S-8250AAG-I6T1U | 0.081 V | 0.076 V | 0.071 V | 0.500 V | −0.100 V |

*1. Refer to **Table 3** about the details of the delay time combinations.
*2. Refer to **Table 5** about the details of the function combinations.

**Remark** Please contact our sales office for the products with detection voltage value other than those specified above.

NOT RECOMMENDED FOR NEW DESIGN

**Table 3**

| Delay Time Combination | Overcharge Detection Delay Time [$t_{CU}$] | Overdischarge Detection Delay Time [$t_{DL}$] | Discharge Overcurrent Detection Delay Time [$t_{DIOV}$] | Load Short-circuiting Detection Delay Time [$t_{SHORT}$] | Charge Overcurrent Detection Delay Time [$t_{CIOV}$] | Discharge Inhibition Delay Time [$t_{CTL}$] |
|---|---|---|---|---|---|---|
| (1) | 1.0 s | 128 ms | 32 ms | 280 µs | 8 ms | 256 ms |
| (2) | 1.0 s | 32 ms | 16 ms | 280 µs | 16 ms | 256 ms |

**Remark** The delay times can be changed within the range listed in **Table 4**. For details, please contact our sales office.

**Table 4**

| Delay Time | Symbol | Selection Range | | | Remark |
|---|---|---|---|---|---|
| Overcharge detection delay time | $t_{CU}$ | 256 ms | 512 ms | 1.0 s *1 | Select a value from the left. |
| Overdischarge detection delay time | $t_{DL}$ | 32 ms | 64 ms | 128 ms *1 | Select a value from the left. |
| Discharge overcurrent detection delay time | $t_{DIOV}$ | 8 ms | 16 ms *1 | 32 ms | Select a value from the left. |
| Load short-circuiting detection delay time | $t_{SHORT}$ | 280 µs *1 | 530 µs | – | Select a value from the left. |
| Charge overcurrent detection delay time | $t_{CIOV}$ | 8 ms | 16 ms *1 | 32 ms | Select a value from the left. |
| Discharge inhibition delay time | $t_{CTL}$ | 64 ms | 128 ms | 256 ms *1 | Select a value from the left. |

***1.** This value is the delay time of the standard products.

**Table 5**

| Function Combination | CTL Pin | | | Discharge Inhibition Status Latch Function *4 | 0 V Battery Charge Function *5 | Power-down Function *6 | Release Condition of Discharge Overcurrent Status *7 |
|---|---|---|---|---|---|---|---|
| | Control Logic *1 | Internal Resistance Connection *2 | Internal Resistance Value *3 [$R_{CTL}$] | | | | |
| (1) | Active "H" | Pull-down | 5.0 MΩ | Unavailable | Available | Available | Charger connection |
| (2) | Active "H" | Pull-down | 5.0 MΩ | Unavailable | Unavailable | Available | Load disconnection |
| (3) | Active "H" | Pull-down | 5.0 MΩ | Unavailable | Unavailable | Available | Charger connection |

**Caution The combination of CTL pin control logic active "H" and CTL pin internal resistance connection "pull-up" worsens the accuracy of overcharge detection voltage. Therefore, this combination can not be set up.**

***1.** CTL pin control logic active "H" / active "L" is selectable.
***2.** CTL pin internal resistance connection "pull-up" / "pull-down" is selectable.
***3.** CTL pin internal resistance value 1.0 MΩ / 2.0 MΩ / 3.0 MΩ / 4.0 MΩ / 5.0 MΩ is selectable.
***4.** Discharge inhibition status latch function "available" / "unavailable" is selectable.
***5.** 0 V battery charge function "available" / "unavailable" is selectable.
***6.** Power-down function "available" / "unavailable" is selectable.
***7.** Release condition of discharge overcurrent status "load disconnection" / "charger connection" is selectable.

**Remark** Please contact our sales office for the products with function combinations other than those specified above.

NOT RECOMMENDED FOR NEW DESIGN

## ■ Pin Configuration

### 1. SNT-6A

Top view

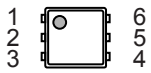


**Figure 2**

**Table 6**

| Pin No. | Symbol | Description |
|---|---|---|
| 1 | CTL | Discharge control pin |
| 2 | CO | Connection pin of charge control FET gate (CMOS output) |
| 3 | DO | Connection pin of discharge control FET gate (CMOS output) |
| 4 | VSS | Input pin for negative power supply |
| 5 | VDD | Input pin for positive power supply |
| 6 | VM | Voltage detection pin between VM pin and VSS pin (Overcurrent / charger detection pin) |

NOT RECOMMENDED FOR NEW DESIGN

## ■ Absolute Maximum Ratings

**Table 7**

(Ta = +25°C unless otherwise specified)

| Item | Symbol | Applied pin | Absolute Maximum Rating | Unit |
|---|---|---|---|---|
| Input voltage between VDD pin and VSS pin | $V_{DS}$ | VDD | $V_{SS}$ − 0.3 to $V_{SS}$ + 12 | V |
| VM pin input voltage | $V_{VM}$ | VM | $V_{DD}$ − 28 to $V_{DD}$ + 0.3 | V |
| DO pin output voltage | $V_{DO}$ | DO | $V_{SS}$ − 0.3 to $V_{DD}$ + 0.3 | V |
| CO pin output voltage | $V_{CO}$ | CO | $V_{VM}$ − 0.3 to $V_{DD}$ + 0.3 | V |
| CTL pin input voltage | $V_{CTL}$ | CTL | $V_{SS}$ − 0.3 to $V_{DD}$ + 0.3 | V |
| Power dissipation | $P_D$ | − | 400*1 | mW |
| Operation ambient temperature | $T_{opr}$ | − | −40 to +85 | °C |
| Storage temperature | $T_{stg}$ | − | −55 to +125 | °C |

***1.** When mounted on board
[Mounted board]
(1) Board size: 114.3 mm × 76.2 mm × t1.6 mm
(2) Board name: JEDEC STANDARD51-7

**Caution** **The absolute maximum ratings are rated values exceeding which the product could suffer physical damage. These values must therefore not be exceeded under any conditions.**

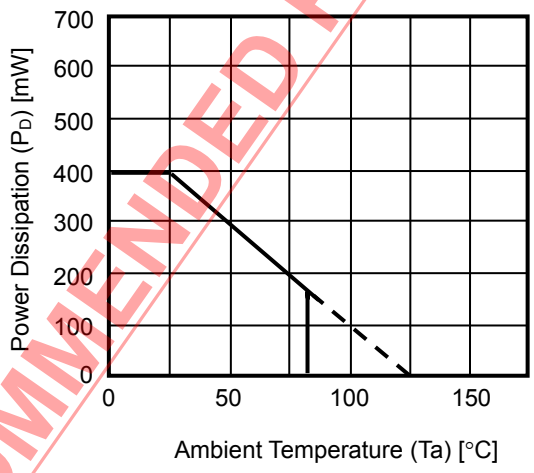


**Figure 3 Power Dissipation of Package (When Mounted on Board)**

NOT RECOMMENDED FOR NEW DESIGN

## ■ Electrical Characteristics

### 1. Ta = +25°C

**Table 8**

(Ta = +25°C unless otherwise specified)

| Item | Symbol | Condition | Min. | Typ. | Max. | Unit | Test Circuit |
|---|---|---|---|---|---|---|---|
| **Detection Voltage** | | | | | | | |
| Overcharge detection voltage | $V_{CU}$ | – | $V_{CU}$ – 0.020 | $V_{CU}$ | $V_{CU}$ + 0.020 | V | 1 |
| | | Ta = –10°C to +60°C*1 | $V_{CU}$ – 0.025 | $V_{CU}$ | $V_{CU}$ + 0.025 | V | 1 |
| Overcharge release voltage | $V_{CL}$ | $V_{CL} \neq V_{CU}$ | $V_{CL}$ – 0.030 | $V_{CL}$ | $V_{CL}$ + 0.030 | V | 1 |
| | | $V_{CL} = V_{CU}$ | $V_{CL}$ – 0.025 | $V_{CL}$ | $V_{CL}$ + 0.020 | V | 1 |
| Overdischarge detection voltage | $V_{DL}$ | – | $V_{DL}$ – 0.050 | $V_{DL}$ | $V_{DL}$ + 0.050 | V | 2 |
| Overdischarge release voltage | $V_{DU}$ | $V_{DL} \neq V_{DU}$ | $V_{DU}$ – 0.100 | $V_{DU}$ | $V_{DU}$ + 0.100 | V | 2 |
| | | $V_{DL} = V_{DU}$ | $V_{DU}$ – 0.050 | $V_{DU}$ | $V_{DU}$ + 0.050 | V | 2 |
| Discharge overcurrent detection voltage | $V_{DIOV}$ | $V_{DD}$ = 3.0 V | $V_{DIOV}$ – 0.010 | $V_{DIOV}$ | $V_{DIOV}$ + 0.010 | V | 2 |
| | | $V_{DD}$ = 3.4 V | $V_{DIOV}$ – 0.010 | $V_{DIOV}$ | $V_{DIOV}$ + 0.010 | V | 2 |
| | | $V_{DD}$ = 4.0 V | $V_{DIOV}$ – 0.010 | $V_{DIOV}$ | $V_{DIOV}$ + 0.010 | V | 2 |
| Load short-circuiting detection voltage | $V_{SHORT}$ | – | $V_{SHORT}$ – 0.050 | $V_{SHORT}$ | $V_{SHORT}$ + 0.050 | V | 2 |
| Charge overcurrent detection voltage | $V_{CIOV}$ | – | $V_{CIOV}$ – 0.015 | $V_{CIOV}$ | $V_{CIOV}$ + 0.015 | V | 2 |
| **0 V Battery Charge Function** | | | | | | | |
| 0 V battery charge starting charger voltage | $V_{0CHA}$ | 0 V battery charge function "available" | 0.00 | 0.70 | 1.00 | V | 2 |
| 0 V battery charge inhibition battery voltage | $V_{0INH}$ | 0 V battery charge function "unavailable" | 0.90 | 1.25 | 1.60 | V | 2 |
| **Internal Resistance** | | | | | | | |
| Resistance between VM pin and VDD pin | $R_{VMD}$ | – | 500 | 1000 | 2000 | kΩ | 3 |
| Resistance between VM pin and VSS pin | $R_{VMS}$ | – | 10 | 20 | 40 | kΩ | 3 |
| CTL pin internal resistance | $R_{CTL}$ | – | $R_{CTL}$ × 0.5 | $R_{CTL}$ | $R_{CTL}$ × 2.0 | MΩ | 3 |
| **Input Voltage** | | | | | | | |
| Operation voltage between VDD pin and VSS pin | $V_{DSOP1}$ | – | 1.5 | – | 6.5 | V | – |
| Operation voltage between VDD pin and VM pin | $V_{DSOP2}$ | – | 1.5 | – | 28 | V | – |
| CTL pin voltage "H" | $V_{CTLH}$ | – | – | – | $V_{DD}$ × 0.9 | V | 2 |
| CTL pin voltage "L" | $V_{CTLL}$ | – | $V_{DD}$ × 0.1 | – | – | V | 2 |
| **Input Current** | | | | | | | |
| Current consumption during operation | $I_{OPE}$ | – | – | 2.0 | 4.0 | μA | 3 |
| Current consumption during power-down | $I_{PDN}$ | – | – | – | 50 | nA | 3 |
| Current consumption during overdischarge | $I_{OPED}$ | – | – | – | 1.0 | μA | 3 |
| Current consumption during discharge inhibition | $I_{OPEC}$ | – | – | 2.0 | 4.0 | μA | 3 |
| **Output Resistance** | | | | | | | |
| CO pin resistance "H" | $R_{COH}$ | – | 5 | 10 | 20 | kΩ | 4 |
| CO pin resistance "L" | $R_{COL}$ | – | 5 | 10 | 20 | kΩ | 4 |
| DO pin resistance "H" | $R_{DOH}$ | – | 5 | 10 | 20 | kΩ | 4 |
| DO pin resistance "L" | $R_{DOL}$ | – | 5 | 10 | 20 | kΩ | 4 |
| **Delay Time** | | | | | | | |
| Overcharge detection delay time | $t_{CU}$ | – | $t_{CU}$ × 0.8 | $t_{CU}$ | $t_{CU}$ × 1.2 | – | 5 |
| Overdischarge detection delay time | $t_{DL}$ | – | $t_{DL}$ × 0.8 | $t_{DL}$ | $t_{DL}$ × 1.2 | – | 5 |
| Discharge overcurrent detection delay time | $t_{DIOV}$ | – | $t_{DIOV}$ × 0.8 | $t_{DIOV}$ | $t_{DIOV}$ × 1.2 | – | 5 |
| Load short-circuiting detection delay time | $t_{SHORT}$ | – | $t_{SHORT}$ × 0.7 | $t_{SHORT}$ | $t_{SHORT}$ × 1.3 | – | 5 |
| Charge overcurrent detection delay time | $t_{CIOV}$ | – | $t_{CIOV}$ × 0.8 | $t_{CIOV}$ | $t_{CIOV}$ × 1.2 | – | 5 |
| Discharge inhibition delay time | $t_{CTL}$ | – | $t_{CTL}$ × 0.8 | $t_{CTL}$ | $t_{CTL}$ × 1.2 | – | 5 |

*1. Since products are not screened at high and low temperature, the specification for this temperature range is guaranteed by design, not tested in production.

NOT RECOMMENDED FOR NEW DESIGN

### 2. Ta = –40°C to +85°C*1

**Table 9**

(Ta = –40°C to +85°C*1 unless otherwise specified)

| Item | Symbol | Condition | Min. | Typ. | Max. | Unit | Test Circuit |
|---|---|---|---|---|---|---|---|
| **Detection Voltage** | | | | | | | |
| Overcharge detection voltage | $V_{CU}$ | – | $V_{CU}$ – 0.045 | $V_{CU}$ | $V_{CU}$ + 0.030 | V | 1 |
| Overcharge release voltage | $V_{CL}$ | $V_{CL} \neq V_{CU}$ | $V_{CL}$ – 0.070 | $V_{CL}$ | $V_{CL}$ + 0.040 | V | 1 |
| | | $V_{CL} = V_{CU}$ | $V_{CL}$ – 0.050 | $V_{CL}$ | $V_{CL}$ + 0.030 | V | 1 |
| Overdischarge detection voltage | $V_{DL}$ | – | $V_{DL}$ – 0.090 | $V_{DL}$ | $V_{DL}$ + 0.060 | V | 2 |
| Overdischarge release voltage | $V_{DU}$ | $V_{DL} \neq V_{DU}$ | $V_{DU}$ – 0.140 | $V_{DU}$ | $V_{DU}$ + 0.110 | V | 2 |
| | | $V_{DL} = V_{DU}$ | $V_{DU}$ – 0.090 | $V_{DU}$ | $V_{DU}$ + 0.060 | V | 2 |
| Discharge overcurrent detection voltage*2 | $V_{DIOV}$ | $V_{DD}$ = 3.0 V | – | $V_{DIOV}$ | – | V | 2 |
| | | $V_{DD}$ = 3.4 V | – | $V_{DIOV}$ | – | V | 2 |
| | | $V_{DD}$ = 4.0 V | | $V_{DIOV}$ | – | V | 2 |
| Load short-circuiting detection voltage | $V_{SHORT}$ | – | $V_{SHORT}$ – 0.050 | $V_{SHORT}$ | $V_{SHORT}$ + 0.050 | V | 2 |
| Charge overcurrent detection voltage | $V_{CIOV}$ | – | $V_{CIOV}$ – 0.015 | $V_{CIOV}$ | $V_{CIOV}$ + 0.015 | V | 2 |
| **0 V Battery Charge Function** | | | | | | | |
| 0 V battery charge starting charger voltage | $V_{0CHA}$ | 0 V battery charge function "available" | 0.00 | 0.70 | 1.50 | V | 2 |
| 0 V battery charge inhibition battery voltage | $V_{0INH}$ | 0 V battery charge function "unavailable" | 0.70 | 1.25 | 1.80 | V | 2 |
| **Internal Resistance** | | | | | | | |
| Resistance between VM pin and VDD pin | $R_{VMD}$ | – | 250 | 1000 | 3000 | kΩ | 3 |
| Resistance between VM pin and VSS pin | $R_{VMS}$ | – | 7.2 | 20 | 44 | kΩ | 3 |
| CTL pin internal resistance | $R_{CTL}$ | – | $R_{CTL}$ × 0.25 | $R_{CTL}$ | $R_{CTL}$ × 3.0 | MΩ | 3 |
| **Input Voltage** | | | | | | | |
| Operation voltage between VDD pin and VSS pin | $V_{DSOP1}$ | – | 1.5 | – | 6.5 | V | – |
| Operation voltage between VDD pin and VM pin | $V_{DSOP2}$ | – | 1.5 | – | 28 | V | – |
| CTL pin voltage "H" | $V_{CTLH}$ | – | – | – | $V_{DD}$ × 0.95 | V | 2 |
| CTL pin voltage "L" | $V_{CTLL}$ | – | $V_{DD}$ × 0.05 | – | – | V | 2 |
| **Input Current** | | | | | | | |
| Current consumption during operation | $I_{OPE}$ | – | – | 2.0 | 4.5 | μA | 3 |
| Current consumption during power-down | $I_{PDN}$ | – | – | – | 100 | nA | 3 |
| Current consumption during overdischarge | $I_{OPED}$ | – | – | – | 2.0 | μA | 3 |
| Current consumption during discharge inhibition | $I_{OPEC}$ | – | – | 2.0 | 4.5 | μA | 3 |
| **Output Resistance** | | | | | | | |
| CO pin resistance "H" | $R_{COH}$ | – | 2.5 | 10 | 30 | kΩ | 4 |
| CO pin resistance "L" | $R_{COL}$ | – | 2.5 | 10 | 30 | kΩ | 4 |
| DO pin resistance "H" | $R_{DOH}$ | – | 2.5 | 10 | 30 | kΩ | 4 |
| DO pin resistance "L" | $R_{DOL}$ | – | 2.5 | 10 | 30 | kΩ | 4 |
| **Delay Time** | | | | | | | |
| Overcharge detection delay time | $t_{CU}$ | – | $t_{CU}$ × 0.6 | $t_{CU}$ | $t_{CU}$ × 1.6 | – | 5 |
| Overdischarge detection delay time | $t_{DL}$ | – | $t_{DL}$ × 0.6 | $t_{DL}$ | $t_{DL}$ × 1.6 | – | 5 |
| Discharge overcurrent detection delay time | $t_{DIOV}$ | – | $t_{DIOV}$ × 0.6 | $t_{DIOV}$ | $t_{DIOV}$ × 1.6 | – | 5 |
| Load short-circuiting detection delay time | $t_{SHORT}$ | – | $t_{SHORT}$ × 0.5 | $t_{SHORT}$ | $t_{SHORT}$ × 1.7 | – | 5 |
| Charge overcurrent detection delay time | $t_{CIOV}$ | – | $t_{CIOV}$ × 0.6 | $t_{CIOV}$ | $t_{CIOV}$ × 1.6 | – | 5 |
| Discharge inhibition delay time | $t_{CTL}$ | – | $t_{CTL}$ × 0.6 | $t_{CTL}$ | $t_{CTL}$ × 1.6 | – | 5 |

NOT RECOMMENDED FOR NEW DESIGN

***1.** Since products are not screened at high and low temperature, the specification for this temperature range is guaranteed by design, not tested in production.

***2.** The temperature characteristics of $V_{DIOV}$ is determined depending on the setting of $V_{DIOV}$, and accords closely with the temperature characteristics of ON resistance of the charge-discharge control FET.
Refer to "**2. 5 $V_{DIOV}$ vs. Ta**" in "**■ Characteristics (Typical Data)**" for details.

## ■ Test Circuits

When CTL pin control logic is active "H", SW1 and SW3 are turned off, SW2 and SW4 are turned on. When CTL pin control logic is active "L", SW1 and SW3 are turned on, SW2 and SW4 are turned off.

**Caution Unless otherwise specified, the output voltage levels "H" and "L" at CO pin ($V_{CO}$) and DO pin ($V_{DO}$) are judged by the threshold voltage (1.0 V) of the N-channel FET. Judge the CO pin level with respect to $V_{VM}$ and the DO pin level with respect to $V_{SS}$.**

### 1. Overcharge detection voltage, overcharge release voltage (Test circuit 1)

Overcharge detection voltage ($V_{CU}$) is defined as the voltage V1 at which $V_{CO}$ goes from "H" to "L" when the voltage V1 is gradually increased from the starting conditions of V1 = 3.4 V. Overcharge release voltage ($V_{CL}$) is defined as the voltage V1 at which $V_{CO}$ goes from "L" to "H" when the voltage V1 is then gradually decreased. Overcharge hysteresis voltage ($V_{HC}$) is defined as the difference between $V_{CU}$ and $V_{CL}$.

### 2. Overdischarge detection voltage, overdischarge release voltage (Test circuit 2)

Overdischarge detection voltage ($V_{DL}$) is defined as the voltage V1 at which $V_{DO}$ goes from "H" to "L" when the voltage V1 is gradually decreased from the starting conditions of V1 = 3.4 V, V2 = V5 = 0 V. Overdischarge release voltage ($V_{DU}$) is defined as the voltage V1 at which $V_{DO}$ goes from "L" to "H" when the voltage V1 is then gradually increased from the starting condition of V2 = 0.02 V. Overdischarge hysteresis voltage ($V_{HD}$) is defined as the difference between $V_{DU}$ and $V_{DL}$.

### 3. Discharge overcurrent detection voltage (Test circuit 2)

Discharge overcurrent detection voltage ($V_{DIOV}$) is defined as the voltage V2 whose delay time for changing $V_{DO}$ from "H" to "L" is discharge overcurrent detection delay time ($t_{DIOV}$) when the voltage V2 is increased from the starting conditions of V1 = 3.4 V, V2 = V5 = 0 V.

### 4. Load short-circuiting detection voltage (Test circuit 2)

Load short-circuiting detection voltage ($V_{SHORT}$) is defined as the voltage V2 whose delay time for changing $V_{DO}$ from "H" to "L" is load short-circuiting detection delay time ($t_{SHORT}$) when the voltage V2 is increased from the starting conditions of V1 = 3.4 V, V2 = V5 = 0 V.

### 5. Charge overcurrent detection voltage (Test circuit 2)

Charge overcurrent detection voltage ($V_{CIOV}$) is defined as the voltage V2 whose delay time for changing $V_{CO}$ from "H" to "L" is charge overcurrent detection delay time ($t_{CIOV}$) when the voltage V2 is decreased from the starting conditions of V1 = 3.4 V, V2 = V5 = 0 V.

### 6. Current consumption during operation (Test circuit 3)

The current consumption during operation ($I_{OPE}$) is the current that flows through the VDD pin ($I_{DD}$) under the set conditions of V1 = 3.4 V, V2 = V5 = 0 V.

### 7. Current consumption during power-down, current consumption during overdischarge (Test circuit 3)

#### 7. 1 With power-down function

The current consumption during power-down ($I_{PDN}$) is $I_{DD}$ under the set conditions of V1 = V2 = 1.5 V, V5 = 0 V.

#### 7. 2 Without power-down function

The current consumption during overdischarge ($I_{OPED}$) is $I_{DD}$ under the set conditions of V1 = V2 = 1.5 V, V5 = 0 V.

NOT RECOMMENDED FOR NEW DESIGN

## 8. Current consumption during discharge inhibition (Test circuit 3)

### 8. 1 CTL pin control logic active "L" and CTL pin internal resistance connection "pull-up"

Current consumption during discharge inhibition ($I_{OPEC}$) is the difference of absolute value between $I_{DD}$ and $I_{CTL}$ under the set condition of V1 = V2 = V5 = 3.4 V.

### 8. 2 Other function combinations

Current consumption during discharge inhibition ($I_{OPEC}$) is $I_{DD}$ under the set condition of V1 = V2 = V5 = 3.4 V.

## 9. Resistance between VM pin and VDD pin (Test circuit 3)

Resistance between VM pin and VDD pin is $R_{VMD}$ under the set conditions of V1 = 1.8 V, V2 = V5 = 0 V.

## 10. Resistance between VM pin and VSS pin (Release condition of discharge overcurrent status "load disconnection") (Test circuit 3)

Resistance between VM pin and VSS pin is $R_{VMS}$ under the set conditions of V1 = 3.4 V, V2 = 1.0 V, V5 = 0 V.

## 11. CTL pin internal resistance (Test circuit 3)

### 11. 1 CTL pin control logic active "H" and CTL pin internal resistance connection "pull-down"

Resistance between CTL pin and VSS pin is $R_{CTL}$ under the set conditions of V1 = V5 = 3.4 V, V2 = 0 V.

### 11. 2 CTL pin control logic active "L" and CTL pin internal resistance connection "pull-up"

Resistance between CTL pin and VDD pin is $R_{CTL}$ under the set conditions of V1 = V5 = 3.4 V, V2 = 0 V.

### 11. 3 CTL pin control logic active "L" and CTL pin internal resistance connection "pull-down"

Resistance between CTL pin and VSS pin is $R_{CTL}$ under the set conditions of V1 = 3.4 V, V2 = V5 = 0 V.

## 12. CO pin resistance "H" (Test circuit 4)

The CO pin resistance "H" ($R_{COH}$) is the resistance between VDD pin and CO pin under the set conditions of V1 = 3.4 V, V2 = 0 V, V3 = 3.0 V.

## 13. CO pin resistance "L" (Test circuit 4)

The CO pin resistance "L" ($R_{COL}$) is the resistance between VM pin and CO pin under the set conditions of V1 = 4.6 V, V2 = 0 V, V3 = 0.4 V.

## 14. DO pin resistance "H" (Test circuit 4)

The DO pin resistance "H" ($R_{DOH}$) is the resistance between VDD pin and DO pin under the set conditions of V1 = 3.4 V, V2 = 0 V, V4 = 3.0 V.

## 15. DO pin resistance "L" (Test circuit 4)

The DO pin resistance "L" ($R_{DOL}$) is the resistance between VSS pin and DO pin under the set conditions of V1 = 1.8 V, V2 = 0 V, V4 = 0.4 V.

NOT RECOMMENDED FOR NEW DESIGN

## 16. CTL pin voltage "H", CTL pin voltage "L" (Test circuit 2)

### 16. 1 CTL pin control logic active "H"

The CTL pin voltage "H" ($V_{CTLH}$) is defined as the voltage V5 at which $V_{DO}$ goes from "H" to "L" when the voltage V5 is gradually increased under the set conditions of V1 = 3.4 V, V2 = V5 = 0 V. After that, the CTL pin voltage "L" ($V_{CTLL}$) is defined as the voltage V5 at which $V_{DO}$ goes from "L" to "H" after V5 is gradually decreased.

### 16. 2 CTL pin control logic active "L"

The CTL pin voltage "L" ($V_{CTLL}$) is defined as the voltage difference between the voltage V5 and the voltage V1 (V1 − V5) at which $V_{DO}$ goes from "H" to "L" when the voltage V5 is gradually increased under the set conditions of V1 = 3.4 V, V2 = V5 = 0 V. After that, the CTL pin voltage "H" ($V_{CTLH}$) is defined as the voltage difference between V1 − V5 at which $V_{DO}$ goes from "L" to "H" after V5 is gradually decreased.

## 17. Overcharge detection delay time (Test circuit 5)

The overcharge detection delay time ($t_{CU}$) is the time needed for $V_{CO}$ to go to "L" after the voltage V1 increases and exceeds $V_{CU}$ under the set conditions of V1 = 3.4 V, V2 = V5 = 0 V.

## 18. Overdischarge detection delay time (Test circuit 5)

The overdischarge detection delay time ($t_{DL}$) is the time needed for $V_{DO}$ to go to "L" after the voltage V1 decreases and falls below $V_{DL}$ under the set conditions of V1 = 3.4 V, V2 = V5 = 0 V.

## 19. Discharge overcurrent detection delay time (Test circuit 5)

$t_{DIOV}$ is the time needed for $V_{DO}$ to go to "L" after the voltage V2 increases and exceeds $V_{DIOV}$ under the set conditions of V1 = 3.4 V, V2 = V5 = 0 V.

## 20. Load short-circuiting detection delay time (Test circuit 5)

$t_{SHORT}$ is the time needed for $V_{DO}$ to go to "L" after the voltage V2 increases and exceeds $V_{SHORT}$ under the set conditions of V1 = 3.4 V, V2 = V5 = 0 V.

## 21. Charge overcurrent detection delay time (Test circuit 5)

$t_{CIOV}$ is the time needed for $V_{CO}$ to go to "L" after the voltage V2 decreases and falls below $V_{CIOV}$ under the set conditions of V1 = 3.4 V, V2 = V5 = 0 V.

## 22. Discharge inhibition delay time (Test circuit 5)

### 22. 1 CTL pin control logic active "H"

Discharge inhibition delay time ($t_{CTL}$) is the time needed for $V_{DO}$ to go to "L" after the voltage V5 increases and exceeds $V_{CTLH}$ under the set conditions of V1 = 3.4 V, V2 = V5 = 0 V.

### 22. 2 CTL pin control logic active "L"

Discharge inhibition delay time ($t_{CTL}$) is the time needed for $V_{DO}$ to go to "L" after the voltage V5 increases and V1 − V5 falls below $V_{CTLL}$ under the set conditions of V1 = 3.4 V, V2 = V5 = 0 V.

NOT RECOMMENDED FOR NEW DESIGN

### 23. 0 V battery charge starting charger voltage (0 V battery charge function "available") (Test circuit 2)

The 0 V battery charge starting charger voltage ($V_{0CHA}$) is defined as absolute value of the voltage V2 at which $V_{CO}$ goes to "H" ($V_{CO} = V_{DD}$) when the voltage V2 is gradually decreased under the set condition of V1 = V2 = V5 = 0 V.

### 24. 0 V battery charge inhibition battery voltage (0 V battery charge function "unavailable") (Test circuit 2)

The 0 V battery charge inhibition battery voltage ($V_{0INH}$) is defined as the voltage V1 at which $V_{CO}$ goes to "H" ($V_{CO} = V_{DD}$) when the voltage V1 is gradually increased under the set conditions of V1 = V5 = 0 V, V2 = −2.0 V.

NOT RECOMMENDED FOR NEW DESIGN

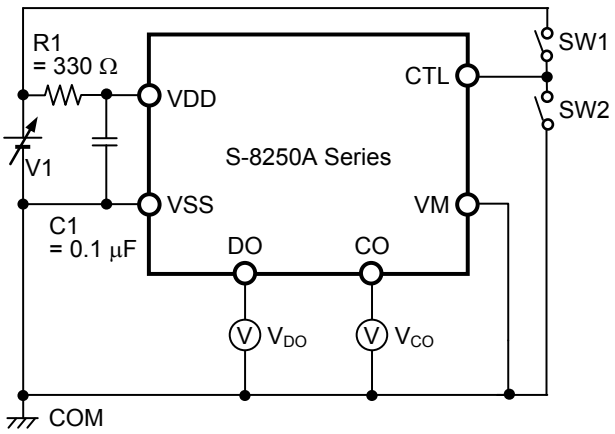


**Figure 4 Test Circuit 1**

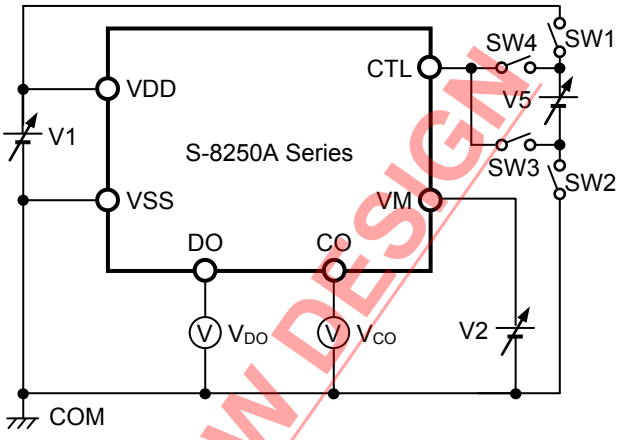


**Figure 5 Test Circuit 2**

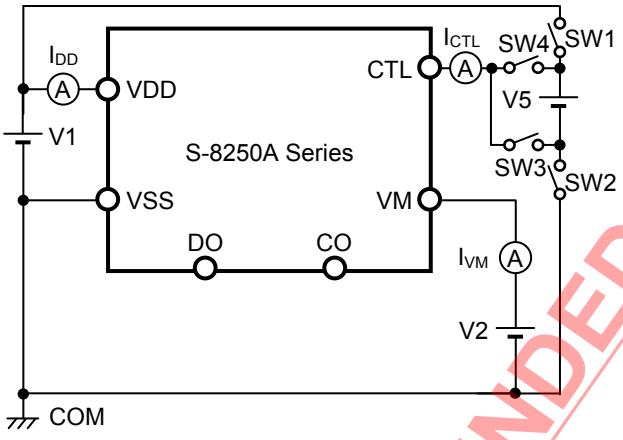


**Figure 6 Test Circuit 3**

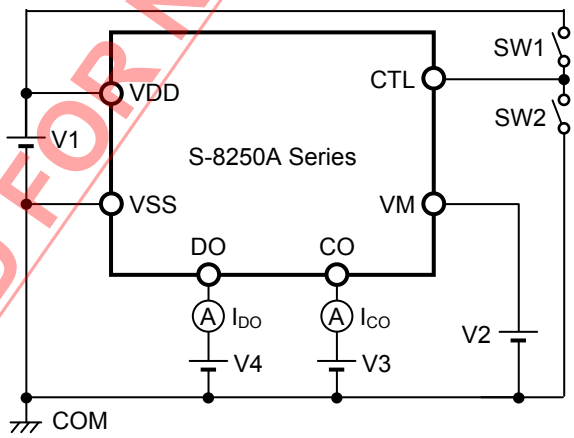


**Figure 7 Test Circuit 4**

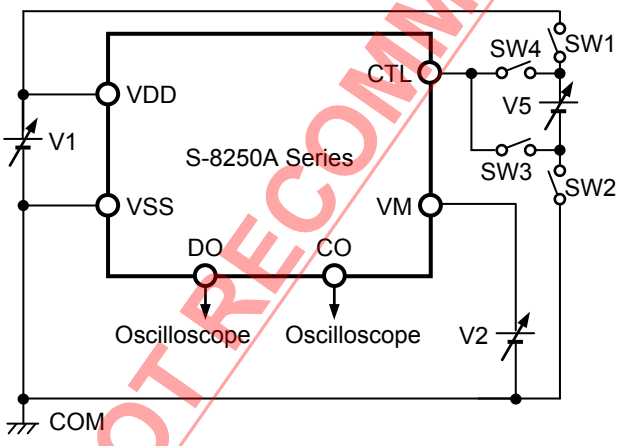


**Figure 8 Test Circuit 5**

NOT RECOMMENDED FOR NEW DESIGN

# ■ Operation

**Remark** Refer to "■ **Battery Protection IC Connection Example**".

## 1. Normal status

The S-8250A Series monitors the voltage of the battery connected between the VDD pin and VSS pin, the voltage between the VM pin and VSS pin and the voltage between the CTL pin and VSS pin to control charging and discharging.

### 1. 1 CTL pin control logic active "H"

When the battery voltage is in the range from the overdischarge detection voltage ($V_{DL}$) to the overcharge detection voltage ($V_{CU}$), and the VM pin voltage is in the range from the charge overcurrent detection voltage ($V_{CIOV}$) to the discharge overcurrent detection voltage ($V_{DIOV}$), the S-8250A Series turns both the charge and discharge control FETs on if the CTL pin voltage is equal to or lower than the CTL pin voltage "L" ($V_{CTLL}$). This condition is called the normal status, and in this condition charging and discharging can be carried out freely.
The resistance between the VM pin and VDD pin ($R_{VMD}$) and the resistance between the VM pin and VSS pin ($R_{VMS}$) are not connected in the normal status.

### 1. 2 CTL pin control logic active "L"

When the battery voltage is in the range from the overdischarge detection voltage ($V_{DL}$) to the overcharge detection voltage ($V_{CU}$), and the VM pin voltage is in the range from the charge overcurrent detection voltage ($V_{CIOV}$) to the discharge overcurrent detection voltage ($V_{DIOV}$), the S-8250A Series turns both the charge and discharge control FETs on if the CTL pin voltage is equal to or higher than the CTL pin voltage "H" ($V_{CTLH}$). This condition is called the normal status, and in this condition charging and discharging can be carried out freely.
The resistance between the VM pin and VDD pin ($R_{VMD}$) and the resistance between the VM pin and VSS pin ($R_{VMS}$) are not connected in the normal status.

**Caution When the battery is connected for the first time, the S-8250A Series may not be in the normal status. In this case, short the VM pin and VSS pin, or set the VM pin voltage at the level of $V_{CIOV}$ or more and at the level of $V_{DIOV}$ or less by connecting the charger. The S-8250A Series then becomes the normal status.**

NOT RECOMMENDED FOR NEW DESIGN

## 2. Overcharge status

### 2. 1 $V_{CL} \neq V_{CU}$ (Product in which overcharge release voltage differs from overcharge detection voltage)

When the battery voltage becomes higher than $V_{CU}$ during charging in the normal status and detection continues for the overcharge detection delay time ($t_{CU}$) or longer, the S-8250A Series turns the charge control FET off to stop charging. This condition is called the overcharge status.
The overcharge status is released in the following two cases.

(1) In the case that the VM pin voltage is lower than $V_{DIOV}$, the S-8250A Series releases the overcharge status when the battery voltage falls below overcharge release voltage ($V_{CL}$).
(2) In the case that the VM pin voltage is equal to or higher than $V_{DIOV}$, the S-8250A Series releases the overcharge status when the battery voltage falls below $V_{CU}$.

When the discharge is started by connecting a load after the overcharge detection, the VM pin voltage rises by the $V_f$ voltage of the parasitic diode than the VSS pin voltage, because the discharge current flows through the parasitic diode in the charge control FET. If this VM pin voltage is equal to or higher than $V_{DIOV}$, the S-8250A Series releases the overcharge status when the battery voltage is equal to or lower than $V_{CU}$.

**Caution If the battery is charged to a voltage higher than $V_{CU}$ and the battery voltage does not fall below $V_{CU}$ even when a heavy load is connected, discharge overcurrent detection and load short-circuiting detection do not function until the battery voltage falls below $V_{CU}$. Since an actual battery has an internal impedance of tens of mΩ, the battery voltage drops immediately after a heavy load that causes overcurrent is connected, and discharge overcurrent detection and load short-circuiting detection function.**

### 2. 2 $V_{CL} = V_{CU}$ (Product in which overcharge release voltage is the same as overcharge detection voltage)

When the battery voltage becomes higher than $V_{CU}$ during charging in the normal status and detection continues for the overcharge detection delay time ($t_{CU}$) or longer, the S-8250A Series turns the charge control FET off to stop charging. This condition is called the overcharge status.
In the case that the VM pin voltage is higher than 0 V typ., the S-8250A Series releases the overcharge status when the battery voltage falls below $V_{CU}$.

**Caution 1. If the battery is charged to a voltage higher than $V_{CU}$ and the battery voltage does not fall below $V_{CU}$ even when a heavy load is connected, discharge overcurrent detection and load short-circuiting detection do not function until the battery voltage falls below $V_{CU}$. Since an actual battery has an internal impedance of tens of mΩ, the battery voltage drops immediately after a heavy load that causes overcurrent is connected, and discharge overcurrent detection and load short-circuiting detection function.**
**2. When a charger is connected after overcharge detection, the overcharge status is not released even if the battery voltage is below $V_{CL}$. The overcharge status is released when the VM pin voltage goes over 0 V typ. by removing the charger.**

NOT RECOMMENDED FOR NEW DESIGN

## 3. Overdischarge status

When the battery voltage falls below $V_{DL}$ during discharging in the normal status and the condition continues for the overdischarge detection delay time ($t_{DL}$) or longer, the S-8250A Series turns the discharge control FET off to stop discharging. This condition is called the overdischarge status.
Under the overdischarge status, VDD pin and VM pin are shorted by $R_{VMD}$ in the S-8250A Series. The VM pin voltage is pulled up by $R_{VMD}$.
$R_{VMS}$ is not connected in the overdischarge status.

### 3. 1 With power-down function

Under the overdischarge status, when voltage difference between VDD pin and VM pin is 0.8 V typ. or lower, the power-down function works and the current consumption is reduced to the current consumption during power-down ($I_{PDN}$). By connecting a battery charger, the power-down function is released when the VM pin voltage is 0.7 V typ. or lower.

- When a battery is not connected to a charger and the VM pin voltage $\geq$ 0.7 V typ., the S-8250A Series maintains the overdischarge status even when the battery voltage reaches $V_{DU}$ or higher.
- When a battery is connected to a charger and 0.7 V typ. $>$ the VM pin voltage $>$ 0 V typ., the battery voltage reaches $V_{DU}$ or higher and the S-8250A Series releases the overdischarge status.
- When a battery is connected to a charger and 0 V typ. $\geq$ the VM pin voltage, the battery voltage reaches $V_{DL}$ or higher and the S-8250A Series releases the overdischarge status.

### 3. 2 Without power-down function

The power-down function does not work even when voltage difference between VDD pin and VM pin is 0.8 V typ. or lower.

- When a battery is not connected to a charger and the VM pin voltage $\geq$ 0.7 V typ., the battery voltage reaches $V_{DU}$ or higher and the S-8250A Series releases the overdischarge status.
- When a battery is connected to a charger and 0.7 V typ. $>$ the VM pin voltage $>$ 0 V typ., the battery voltage reaches $V_{DU}$ or higher and the S-8250A Series releases the overdischarge status.
- When a battery is connected to a charger and 0 V typ. $\geq$ the VM pin voltage, the battery voltage reaches $V_{DL}$ or higher and the S-8250A Series releases the overdischarge status.

## 4. Discharge overcurrent status (Discharge overcurrent, load short-circuiting)

When a battery in the normal status is in the status where the VM pin voltage is equal to or higher than $V_{DIOV}$ because the discharge current is equal to or higher than the specified value and the status lasts for the discharge overcurrent detection delay time ($t_{DIOV}$) or longer, the discharge control FET is turned off and discharging is stopped. This status is called the discharge overcurrent status.

### 4. 1 Release condition of discharge overcurrent status "load disconnection"

In the discharge overcurrent status, the VM pin and VSS pin are shorted by $R_{VMS}$ in the S-8250A Series. However, the VM pin voltage is the VDD pin voltage due to the load as long as the load is connected. When the load is disconnected, the VM pin voltage returns to the VSS pin voltage. If the VM pin voltage returns to $V_{DIOV}$ or lower, the S-8250A Series releases the discharge overcurrent status.
$R_{VMD}$ is not connected in the discharge overcurrent status.

### 4. 2 Release condition of discharge overcurrent status "charger connection"

In the discharge overcurrent status, the VM pin and VDD pin are shorted by $R_{VMD}$ in the S-8250A Series.
If the VM pin voltage returns to $V_{DIOV}$ or lower by connecting a charger, the S-8250A Series releases the discharge overcurrent status.
$R_{VMS}$ is not connected in the discharge overcurrent status.

## 5. Charge overcurrent status

When a battery in the normal status is in the status where the VM pin voltage is equal to or lower than $V_{CIOV}$ because the charge current is equal to or higher than the specified value and the status lasts for the charge overcurrent detection delay time ($t_{CIOV}$) or longer, the charge control FET is turned off and charging is stopped. This status is called the charge overcurrent status.
The S-8250A Series releases the charge overcurrent status when the VM pin voltage returns to 0 V typ. or higher by removing the charger.
The charge overcurrent detection does not function in the overdischarge status and the discharge inhibition status.

NOT RECOMMENDED FOR NEW DESIGN

## 6. Discharge inhibition status

### 6. 1 CTL pin control logic active "H"

When a battery in the normal status is in the status where CTL pin voltage is equal to or higher than CTL pin voltage "H" ($V_{CTLH}$) and the status lasts for discharge inhibition delay time ($t_{CTL}$) or longer, the discharge control FET is turned off and discharging is stopped. This status is called the discharge inhibition status.

#### 6. 1. 1 Discharge inhibition status latch function "available"

If CTL pin voltage is equal to or lower than CTL pin voltage "L" ($V_{CTLL}$), the S-8250A Series releases discharge inhibition status when the VM pin voltage becomes equal to or lower than $V_{DIOV}$ by connecting a charger.

#### 6. 1. 2 Discharge inhibition status latch function "unavailable"

The S-8250A Series releases discharge inhibition status when the CTL pin voltage becomes equal to or lower than $V_{CTLL}$.

### 6. 2 CTL pin control logic active "L"

When a battery in the normal status is in the status where CTL pin voltage is equal to or lower than CTL pin voltage "L" ($V_{CTLL}$) and the status lasts for discharge inhibition delay time ($t_{CTL}$) or longer, the discharge control FET is turned off and discharging is stopped. This status is called the discharge inhibition status.

#### 6. 2. 1 Discharge inhibition status latch function "available"

If CTL pin voltage is equal to or higher than CTL pin voltage "H" ($V_{CTLH}$), the S-8250A Series releases discharge inhibition status when the VM pin voltage becomes equal to or lower than $V_{DIOV}$ by connecting a charger.

#### 6. 2. 2 Discharge inhibition status latch function "unavailable"

The S-8250A Series releases discharge inhibition status when the CTL pin voltage becomes equal to or higher than $V_{CTLH}$.

In discharge inhibition status, if the battery voltage exceeds $V_{CU}$ by connecting a charger, the S-8250A Series releases discharge inhibition status.
The CTL pin is shorted to the VDD pin or VSS pin by the CTL pin internal resistance ($R_{CTL}$) in the S-8250A Series. When the voltage between the VDD pin and VM pin is 0.8 V typ. or lower in the overdischarge status, $R_{CTL}$ is disconnected and the input and output current to the CTL pin is cut off.
The discharge control by the CTL pin does not function in the overcharge status and the charge overcurrent status.
In the discharge inhibition status, the VM pin and VDD pin are shorted by $R_{VMD}$ in the S-8250A Series.

## 7. 0 V battery charge function "available"

This function is used to recharge a connected battery whose voltage is 0 V due to self-discharge. When the 0 V battery charge starting charger voltage ($V_{0CHA}$) or a higher voltage is applied between the EB+ pin and EB− pin by connecting a charger, the charge control FET gate is fixed to the VDD pin voltage. When the voltage between the gate and source of the charge control FET becomes equal to or higher than the threshold voltage due to the charger voltage, the charge control FET is turned on to start charging. At this time, the discharge control FET is off and the charge current flows through the internal parasitic diode in the discharge control FET. When the battery voltage becomes equal to or higher than $V_{DU}$, the S-8250A Series enters the normal status.

**Caution 1. Some battery providers do not recommend charging for a completely self-discharged battery. Please ask the battery provider to determine whether to enable or inhibit the 0 V battery charge function.**
**2. The 0 V battery charge function has higher priority than the charge overcurrent detection function. Consequently, a product in which use of the 0 V battery charge function is enabled charges a battery forcibly and the charge overcurrent cannot be detected when the battery voltage is lower than $V_{DL}$.**

NOT RECOMMENDED FOR NEW DESIGN

### 8. 0 V battery charge function "unavailable"

This function inhibits recharging when a battery that is internally short-circuited (0 V battery) is connected. When the battery voltage is the 0 V battery charge inhibition battery voltage ($V_{0INH}$) or lower, the charge control FET gate is fixed to the EB– pin voltage to inhibit charging. When the battery voltage is $V_{0INH}$ or higher, charging can be performed.

**Caution** **Some battery providers do not recommend charging for a completely self-discharged battery. Please ask the battery provider to determine whether to enable or inhibit the 0 V battery charge function.**

### 9. Delay circuit

The detection delay times are determined by dividing a clock of approximately 4 kHz by the counter.

**Remark** $t_{DIOV}$ and $t_{SHORT}$ start when $V_{DIOV}$ is detected. When $V_{SHORT}$ is detected over $t_{SHORT}$ after $V_{DIOV}$, the S-8250A Series turns the discharge control FET off within $t_{SHORT}$ from the time of detecting $V_{SHORT}$.

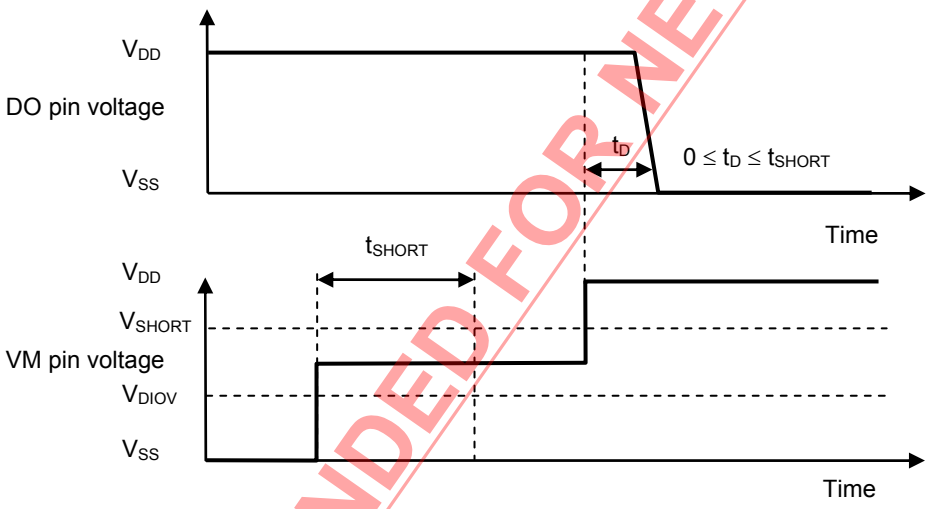


**Figure 9**

NOT RECOMMENDED FOR NEW DESIGN

## ■ Timing Chart

### 1. Overcharge detection, overdischarge detection

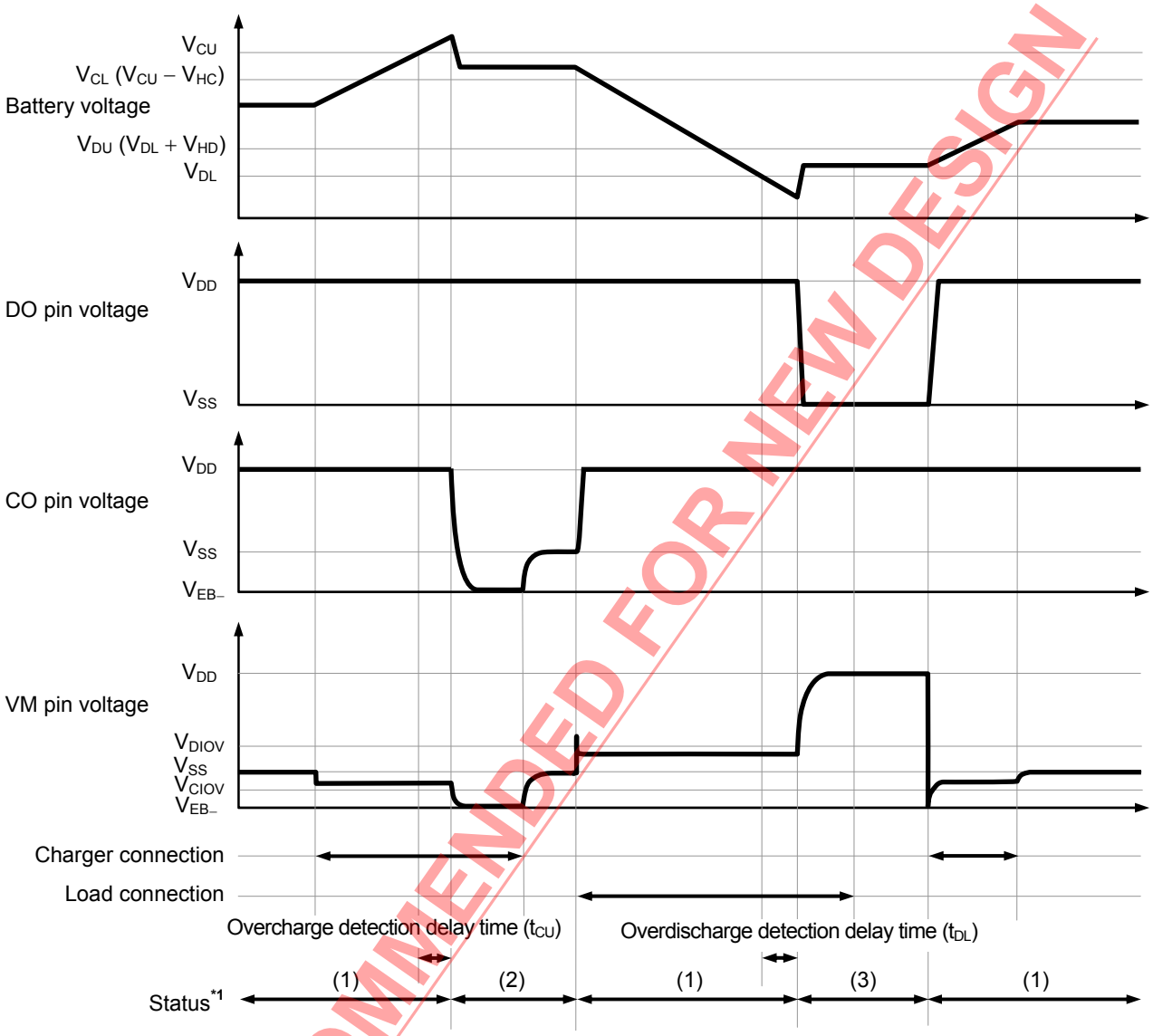


***1.** (1): Normal status
(2): Overcharge status
(3): Overdischarge status

**Remark** The charger is assumed to charge with a constant current.

**Figure 10**

NOT RECOMMENDED FOR NEW DESIGN

## 2. Discharge overcurrent detection

### 2. 1 Release condition of discharge overcurrent status "load disconnection"

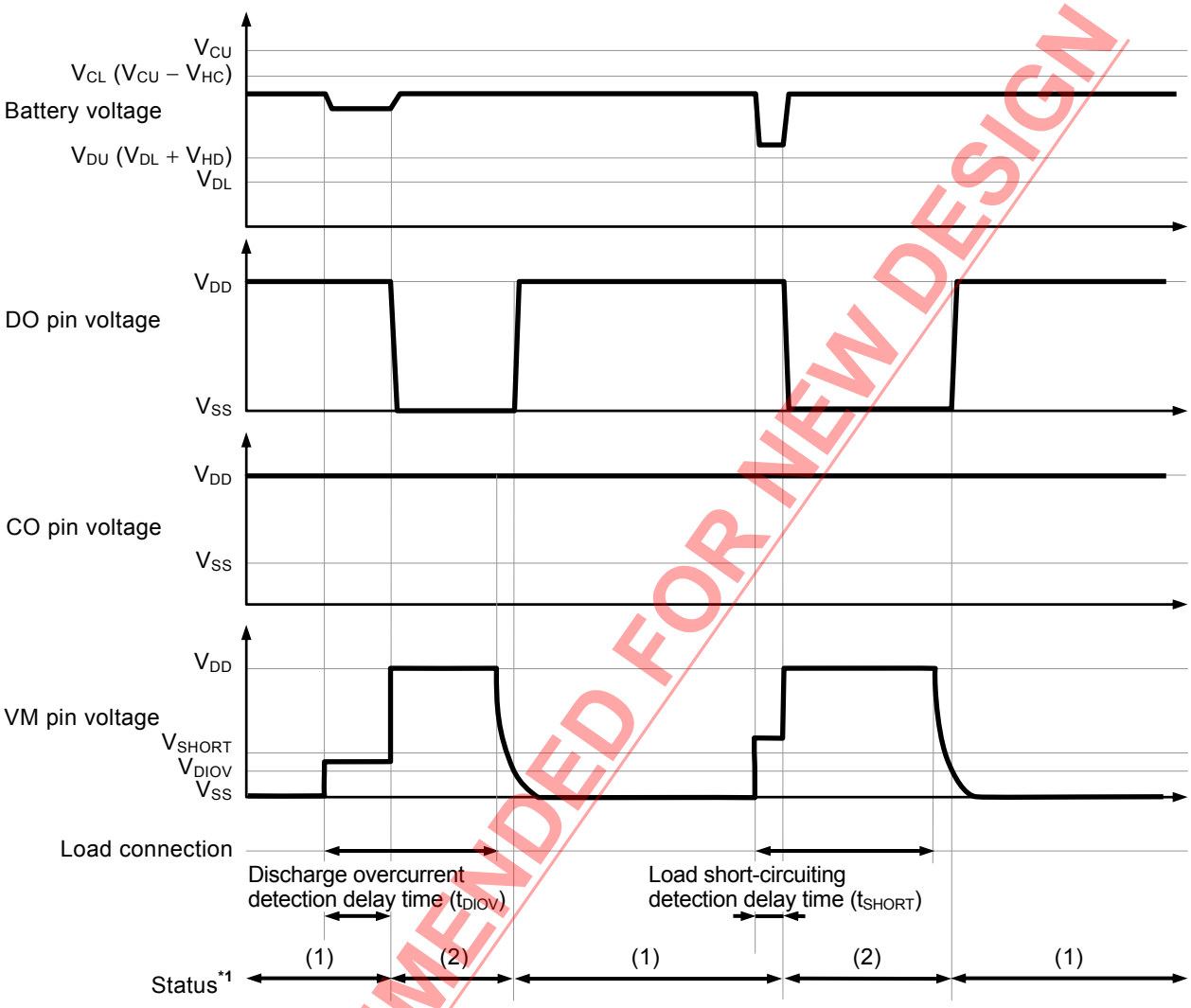


***1.** (1): Normal status
(2): Discharge overcurrent status

**Remark** The charger is assumed to charge with a constant current.

**Figure 11**

NOT RECOMMENDED FOR NEW DESIGN

### 2. 2 Release condition of discharge overcurrent status "charger connection"

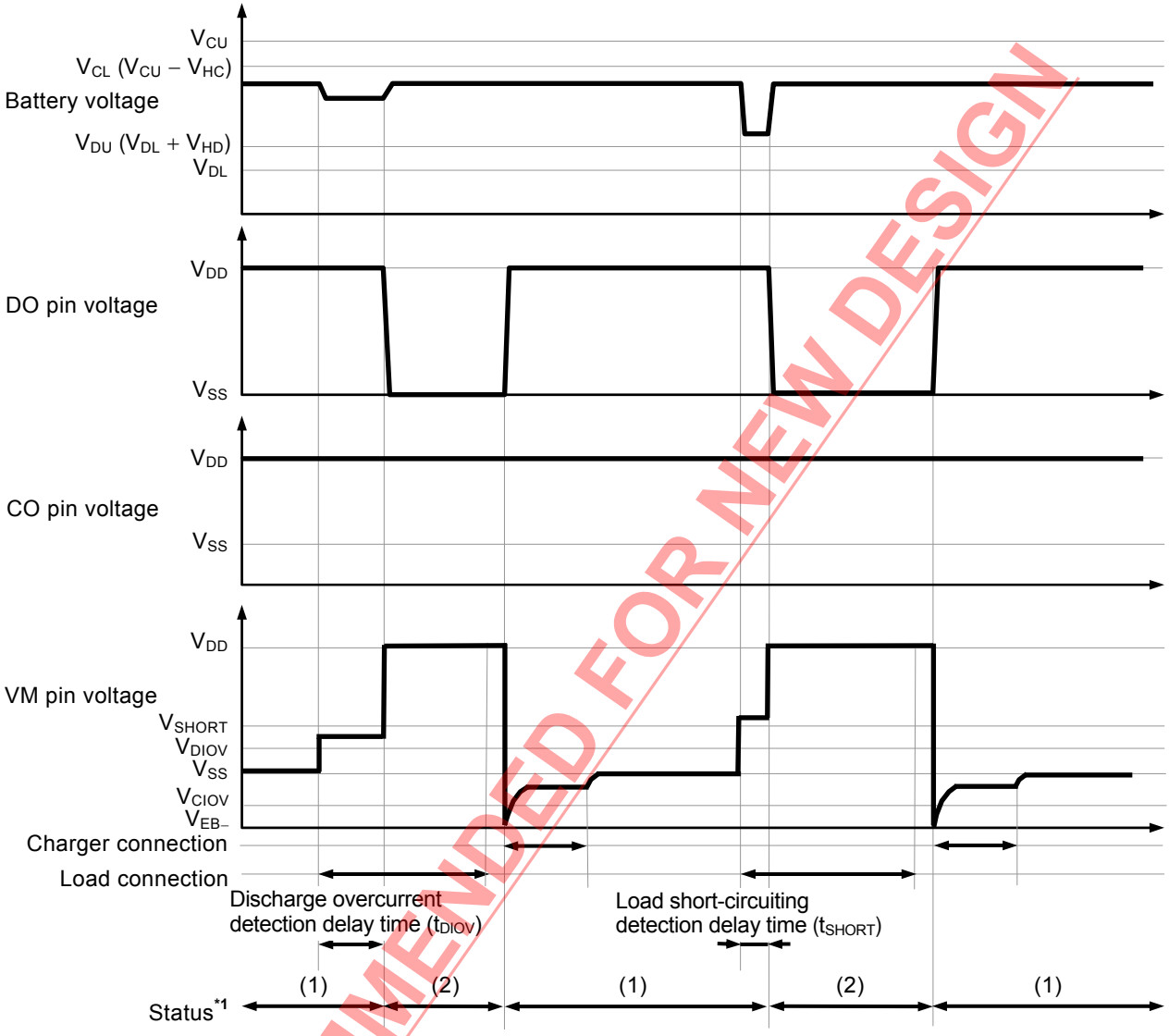


*1. (1): Normal status
(2): Discharge overcurrent status

**Remark** The charger is assumed to charge with a constant current.

**Figure 12**

NOT RECOMMENDED FOR NEW DESIGN

### 3. Charge overcurrent detection

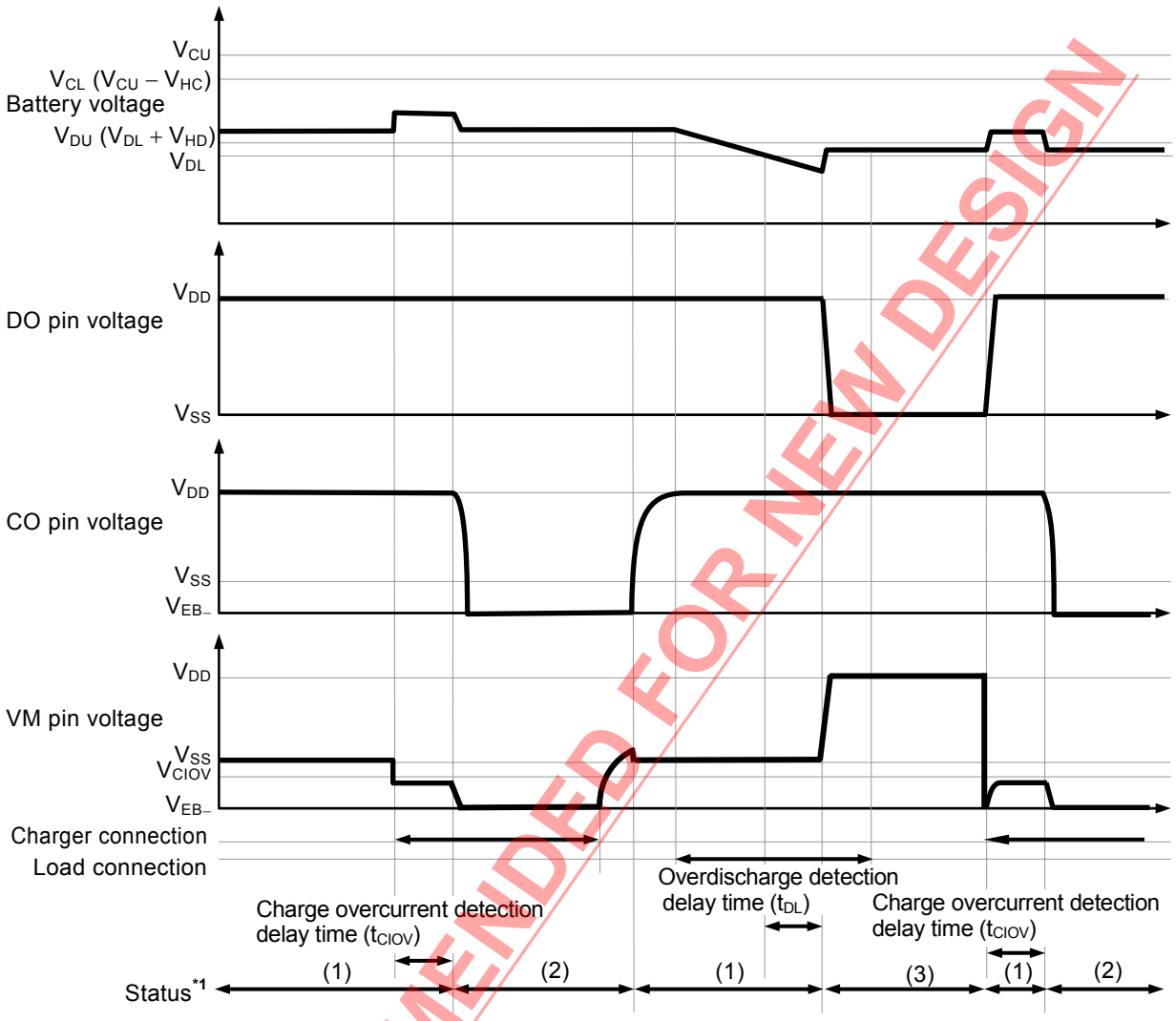


***1.** (1): Normal status
(2): Charge overcurrent status
(3): Overdischarge status

**Remark** The charger is assumed to charge with a constant current.

**Figure 13**

NOT RECOMMENDED FOR NEW DESIGN

## 4. Discharge inhibition operation

### 4. 1 Discharge inhibition status latch function "available"

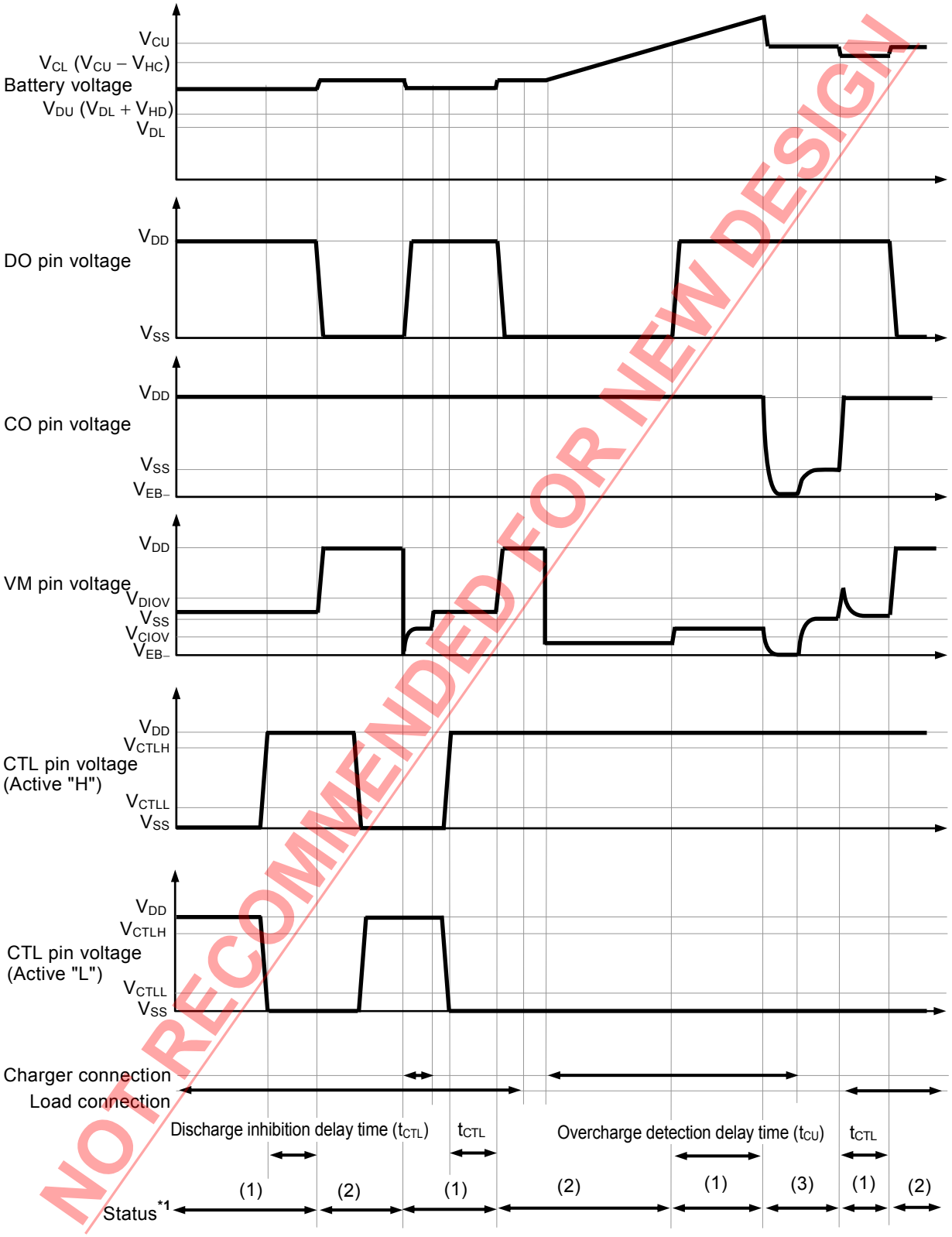


NOT RECOMMENDED FOR NEW DESIGN

***1.** (1): Normal status
(2): Discharge inhibition status
(3): Overcharge status

**Remark** The charger is assumed to charge with a constant current.

**Figure 14**

### 4. 2 Discharge inhibition status latch function "unavailable"

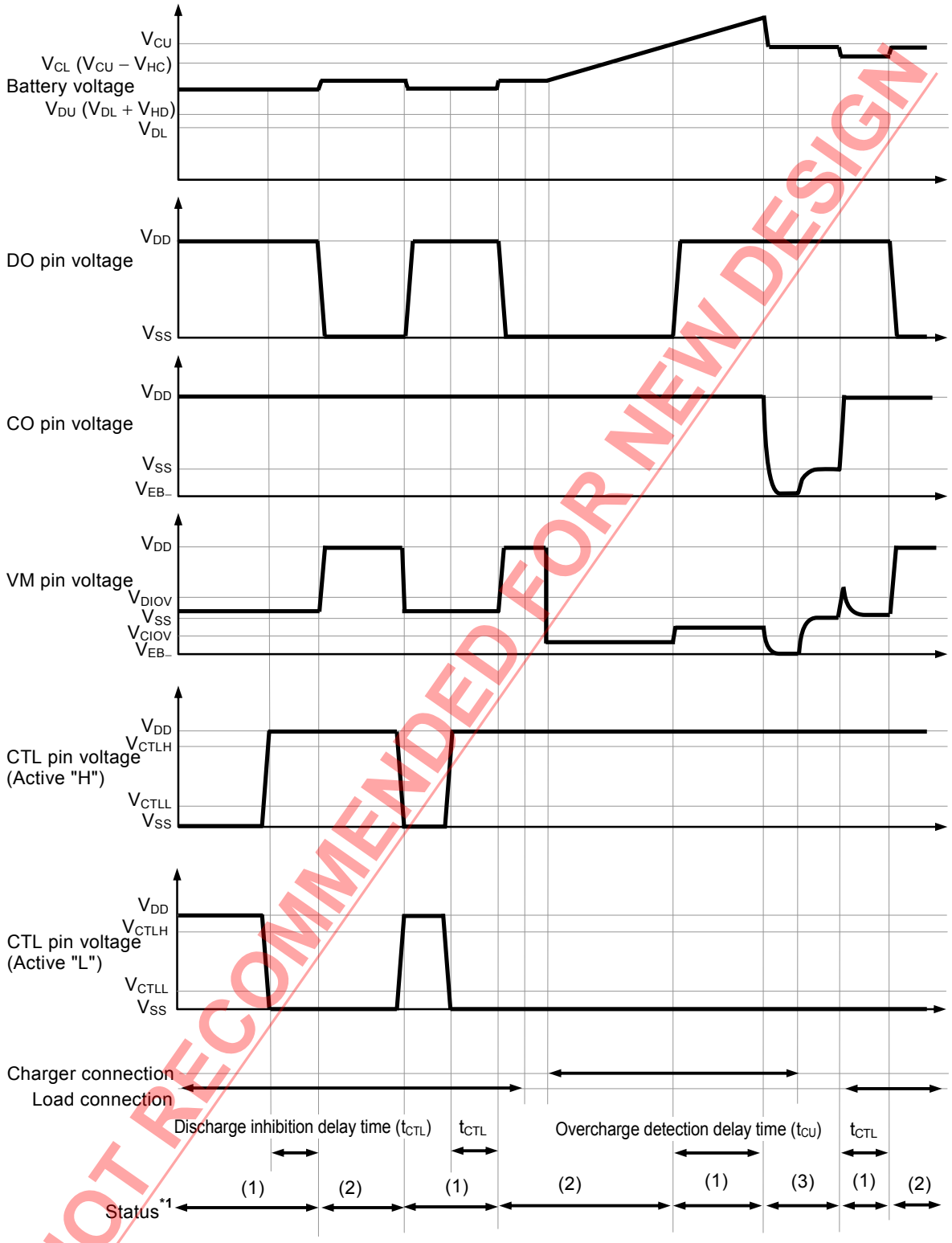


NOT RECOMMENDED FOR NEW DESIGN

***1.** (1): Normal status
(2): Discharge inhibition status
(3): Overcharge status

**Remark** The charger is assumed to charge with a constant current.

**Figure 15**

## ■ Battery Protection IC Connection Example

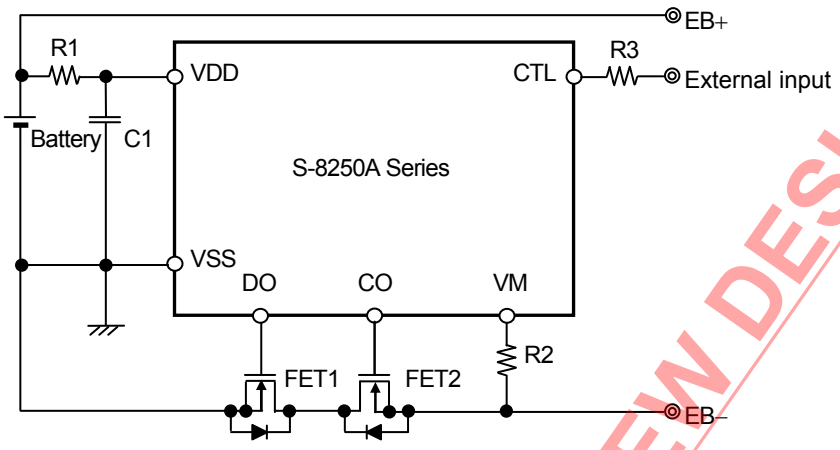


**Figure 16**

**Table 10 Constants for External Components**

| Symbol | Part | Purpose | Min. | Typ. | Max. | Remark |
|---|---|---|---|---|---|---|
| FET1 | N-channel MOS FET | Discharge control | – | – | – | Threshold voltage ≤ Overdischarge detection voltage *1<br>Gate to source withstand voltage ≥ Charger voltage *2 |
| FET2 | N-channel MOS FET | Charge control | – | – | – | Threshold voltage ≤ Overdischarge detection voltage *1<br>Gate to source withstand voltage ≥ Charger voltage *2 |
| R1 | Resistor | ESD protection, For power fluctuation | 150 Ω | 330 Ω | 510 Ω | Resistance should be as small as possible to avoid worsening the overcharge detection accuracy due to current consumption. *3 |
| C1 | Capacitor | For power fluctuation | 0.068 μF | 0.1 μF | 1.0 μF | Connect a capacitor of 0.068 μF or higher between VDD pin and VSS pin. *4 |
| R2 | Resistor | Protection for reverse connection of a charger | 1 kΩ | 2 kΩ | 4 kΩ | Select as large a resistance as possible to prevent current when a charger is connected in reverse. *5 |
| R3 | Resistor | ESD protection | 1 kΩ | – | 10 kΩ | Connect a resistor of 1 kΩ or more to R3 for ESD protection. *6 |

***1.** If the threshold voltage of a FET is low, the FET may not cut the charge current. If a FET with a threshold voltage equal to or higher than the overdischarge detection voltage is used, discharging may be stopped before overdischarge is detected.

***2.** If the withstand voltage between the gate and source is lower than the charger voltage, the FET may be destroyed.

***3.** An accuracy of overcharge detection voltage is guaranteed by R1 = 330 Ω. Connecting resistors with other values worsen the accuracy. In case of connecting a larger resistor to R1, the voltage between the VDD pin and VSS pin may exceed the absolute maximum rating because the current flows to the S-8250A Series from the charger due to reverse connection of charger. Connect a resistor of 150 Ω or more to R1 for ESD protection.

***4.** When connecting a resistor less than 150 Ω to R1 or a capacitor less than 0.068 μF to C1, the S-8250A Series may malfunction when power dissipation is largely fluctuated.

***5.** When a resistor more than 4 kΩ is connected to R2, the charge current may not be cut.

***6.** If the resistance of R3 is too large, the conditions of $V_{CTL} \geq V_{CTLH}$, $V_{CTL} \leq V_{CTLL}$ may not be met.

**Caution 1. The above constants may be changed without notice.**

**2. It has not been confirmed whether the operation is normal or not in circuits other than the above example of connection. In addition, the example of connection shown above and the constant do not guarantee proper operation. Perform thorough evaluation using the actual application to set the constant.**

NOT RECOMMENDED FOR NEW DESIGN

## ■ Precautions

- The application conditions for the input voltage, output voltage, and load current should not exceed the package power dissipation.
- Do not apply an electrostatic discharge to this IC that exceeds the performance ratings of the built-in electrostatic protection circuit.
- ABLIC Inc. claims no responsibility for any and all disputes arising out of or in connection with any infringement by products including this IC of patents owned by a third party.

NOT RECOMMENDED FOR NEW DESIGN

## ■ Characteristics (Typical Data)

### 1. Current consumption

#### 1. 1 $I_{OPE}$ vs. Ta

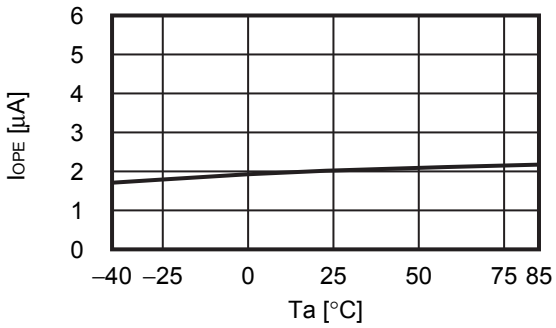


#### 1. 2 $I_{OPE}$ vs. $V_{DD}$

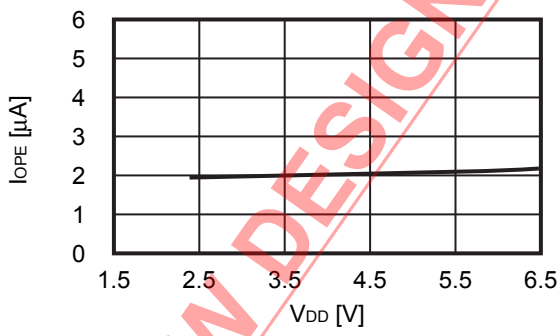


#### 1. 3 $I_{PDN}$ vs. Ta

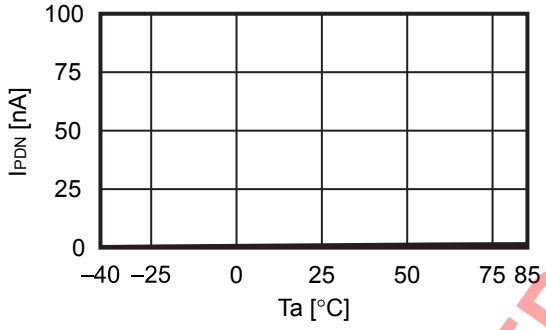


### 2. Detection voltage

#### 2. 1 $V_{CU}$ vs. Ta

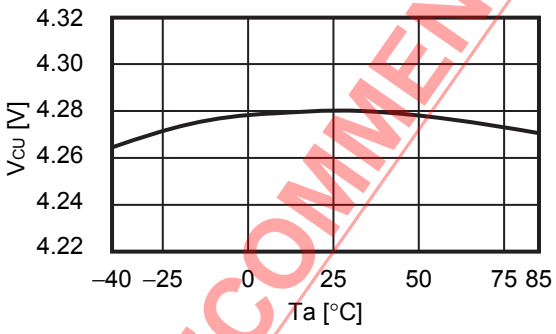


#### 2. 2 $V_{CL}$ vs. Ta

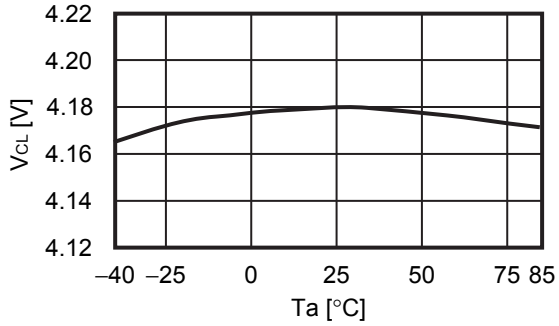


#### 2. 3 $V_{DL}$ vs. Ta

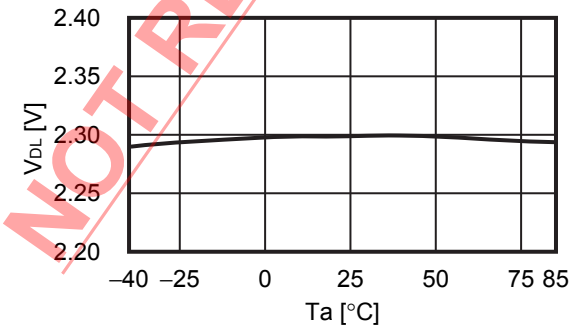


#### 2. 4 $V_{DU}$ vs. Ta

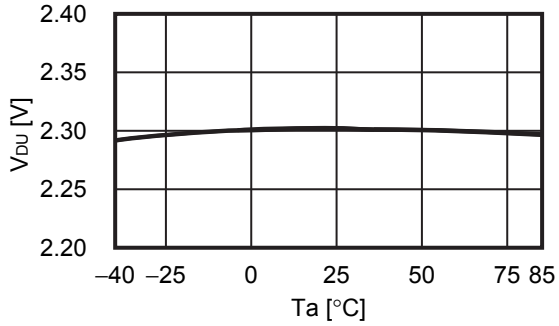


NOT RECOMMENDED FOR NEW DESIGN

### 2. 5 $V_{DIOV}$ vs. Ta

$V_{DD}$ = 3.4 V

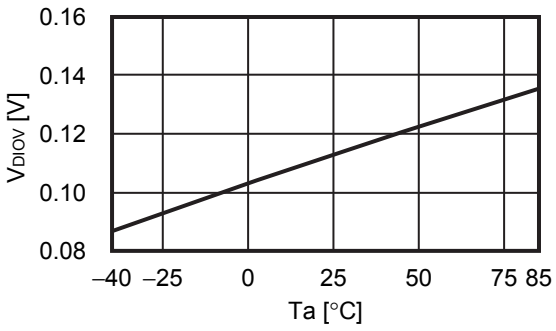


### 2. 6 $V_{DIOV}$ vs. $V_{DD}$

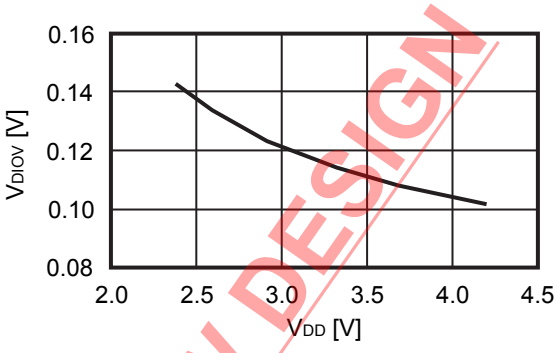


n = 1 ~ 3

### 2. 7 $V_{SHORT}$ vs. Ta

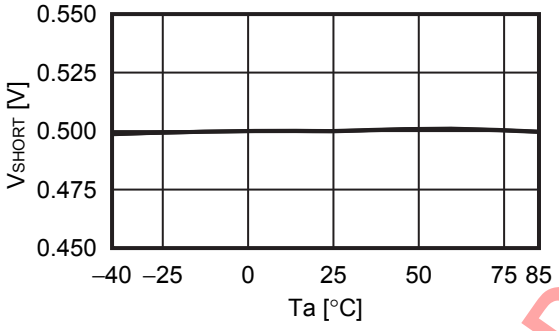


### 2. 8 $V_{SHORT}$ vs. $V_{DD}$

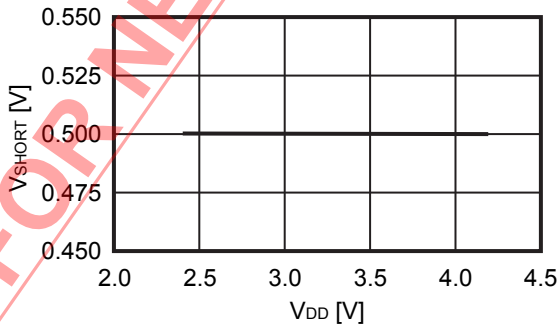


### 2. 9 $V_{CIOV}$ vs. Ta

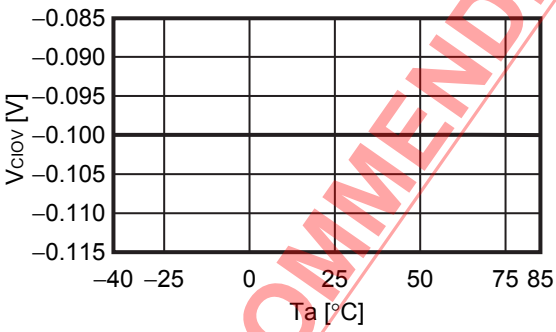


### 2. 10 $V_{CIOV}$ vs. $V_{DD}$

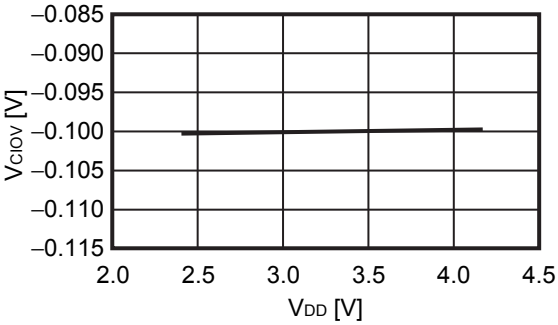


NOT RECOMMENDED FOR NEW DESIGN

## 3. Delay time

### 3. 1 $t_{CU}$ vs. Ta

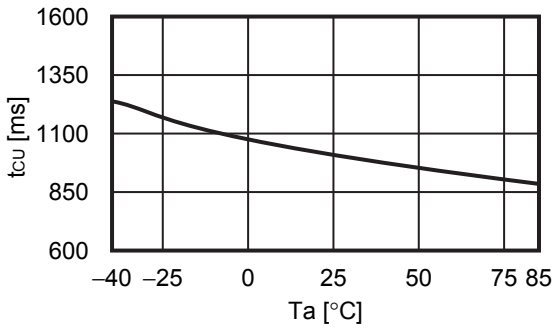


### 3. 2 $t_{DL}$ vs. Ta

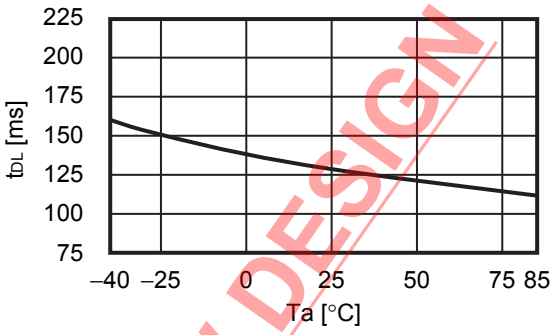


### 3. 3 $t_{DIOV}$ vs. Ta

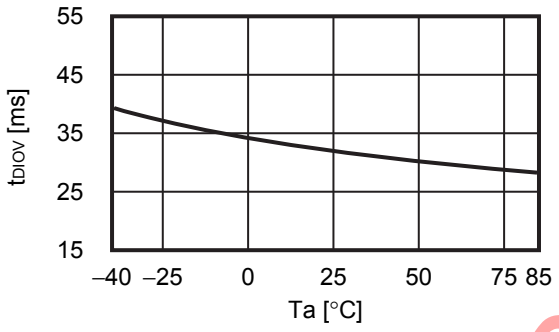


### 3. 4 $t_{DIOV}$ vs. $V_{DD}$

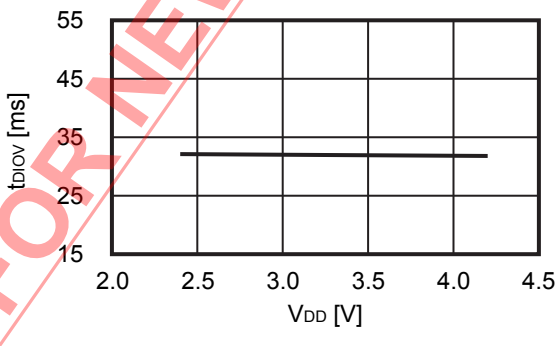


### 3. 5 $t_{SHORT}$ vs. Ta

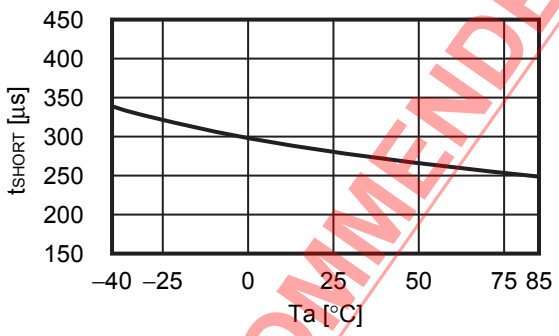


### 3. 6 $t_{SHORT}$ vs. $V_{DD}$

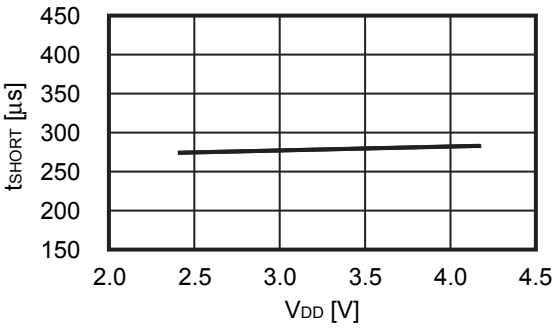


### 3. 7 $t_{CIOV}$ vs. Ta

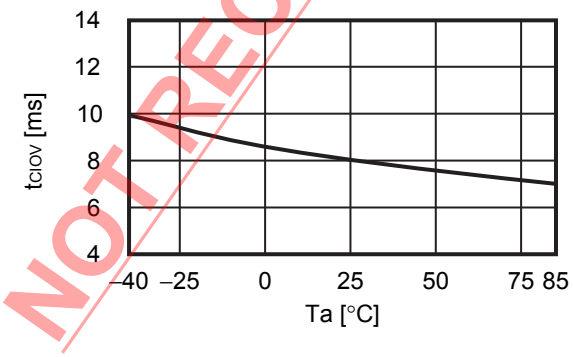


### 3. 8 $t_{CIOV}$ vs. $V_{DD}$

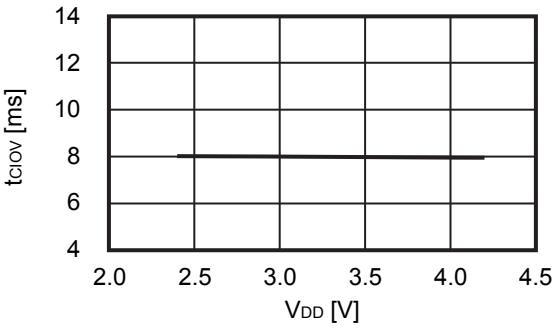


NOT RECOMMENDED FOR NEW DESIGN

### 3. 9 $t_{CTL}$ vs. Ta

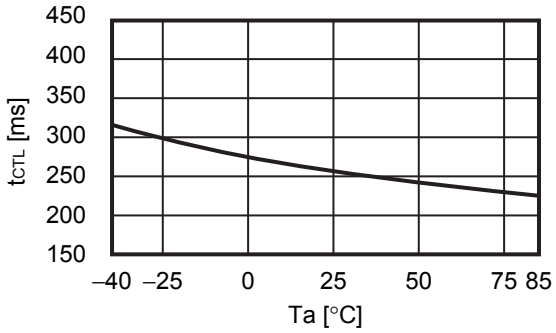


### 3. 10 $t_{CTL}$ vs. $V_{DD}$

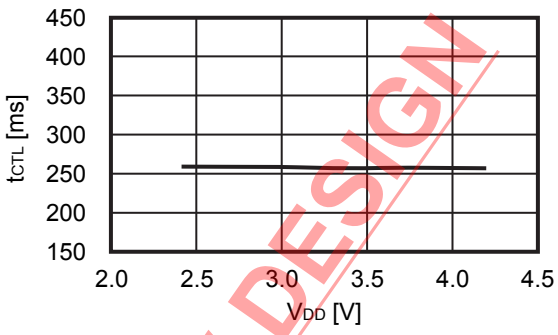


## 4. Output resistance

### 4. 1 $R_{COH}$ vs. $V_{CO}$

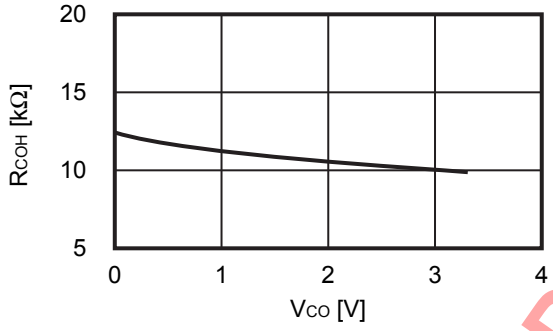


### 4. 2 $R_{COL}$ vs. $V_{CO}$

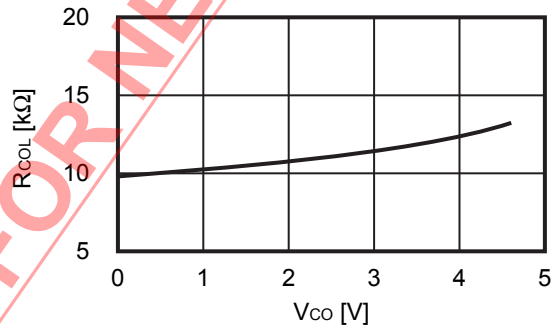


### 4. 3 $R_{DOH}$ vs. $V_{DO}$

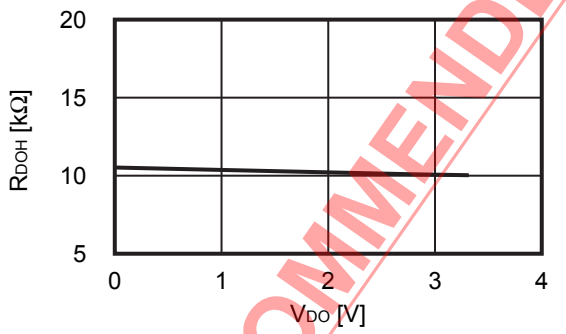


### 4. 4 $R_{DOL}$ vs. $V_{DO}$

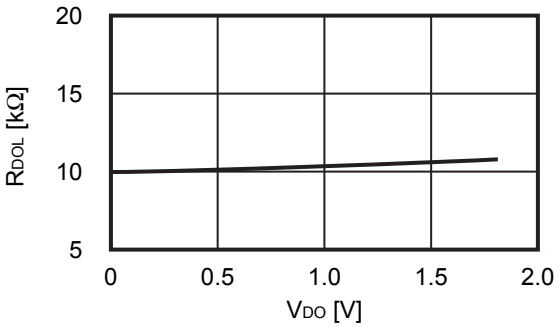


NOT RECOMMENDED FOR NEW DESIGN

## ■ Marking Specification

### 1. SNT-6A

Top view

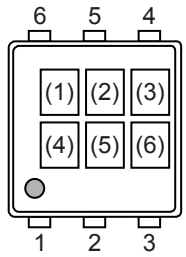


(1) to (3): Product code (refer to **Product name vs. Product code**)
(4) to (6): Lot number

**Product name vs. Product code**

| Product Name | Product Code | | |
|---|---|---|---|
| | (1) | (2) | (3) |
| S-8250AAB-I6T1U | 4 | N | B |
| S-8250AAE-I6T1U | 4 | N | E |
| S-8250AAG-I6T1U | 4 | N | G |

NOT RECOMMENDED FOR NEW DESIGN

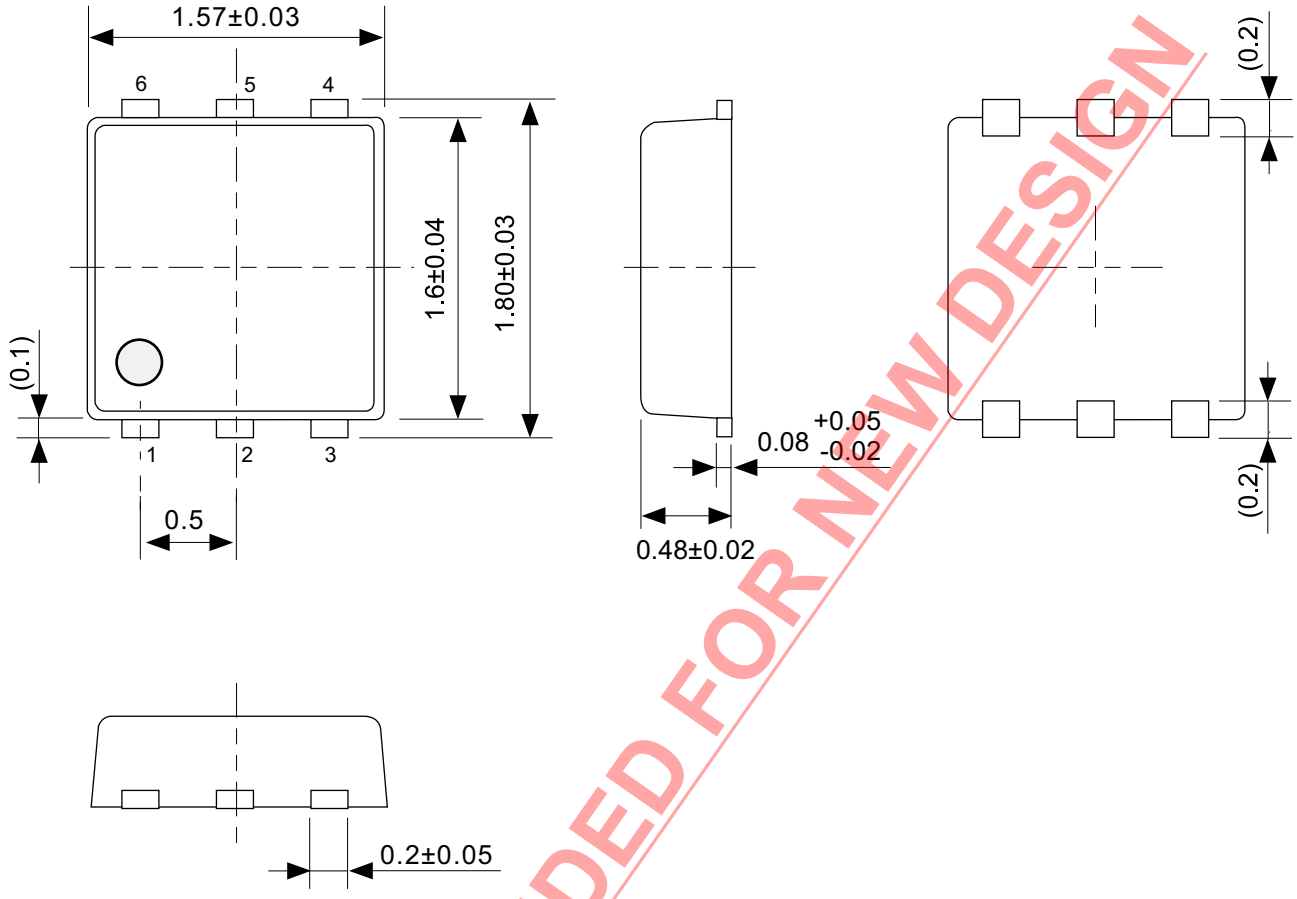


NOT RECOMMENDED FOR NEW DESIGN

No. PG006-A-P-SD-2.1

| | |
|---|---|
| TITLE | SNT-6A-A-PKG Dimensions |
| No. | PG006-A-P-SD-2.1 |
| ANGLE | |
| UNIT | mm |
| | |

**ABLIC Inc.**

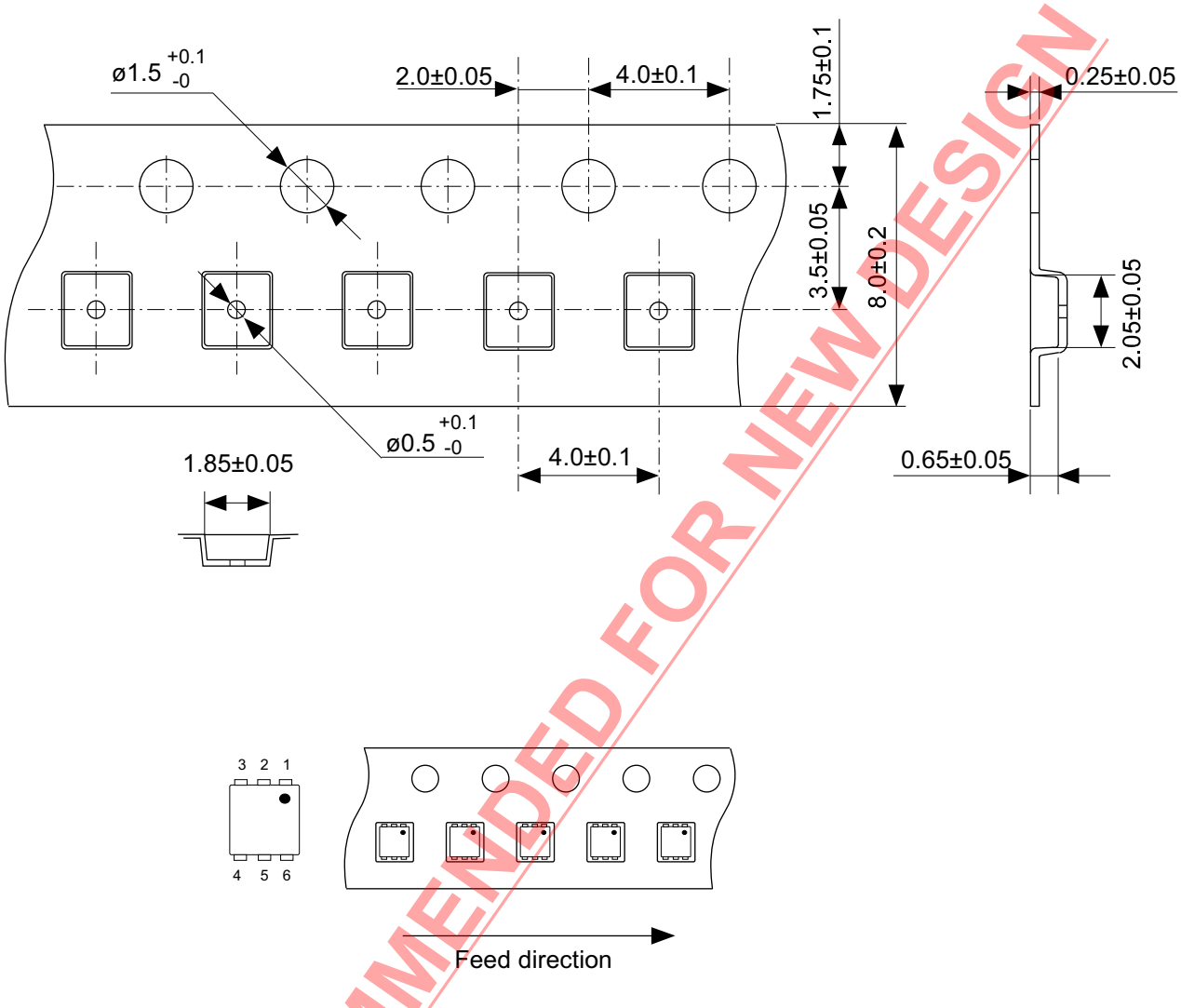


NOT RECOMMENDED FOR NEW DESIGN

No. PG006-A-C-SD-2.0

| | |
|---|---|
| TITLE | SNT-6A-A-Carrier Tape |
| No. | PG006-A-C-SD-2.0 |
| ANGLE | |
| UNIT | mm |
| | |

**ABLIC Inc.**

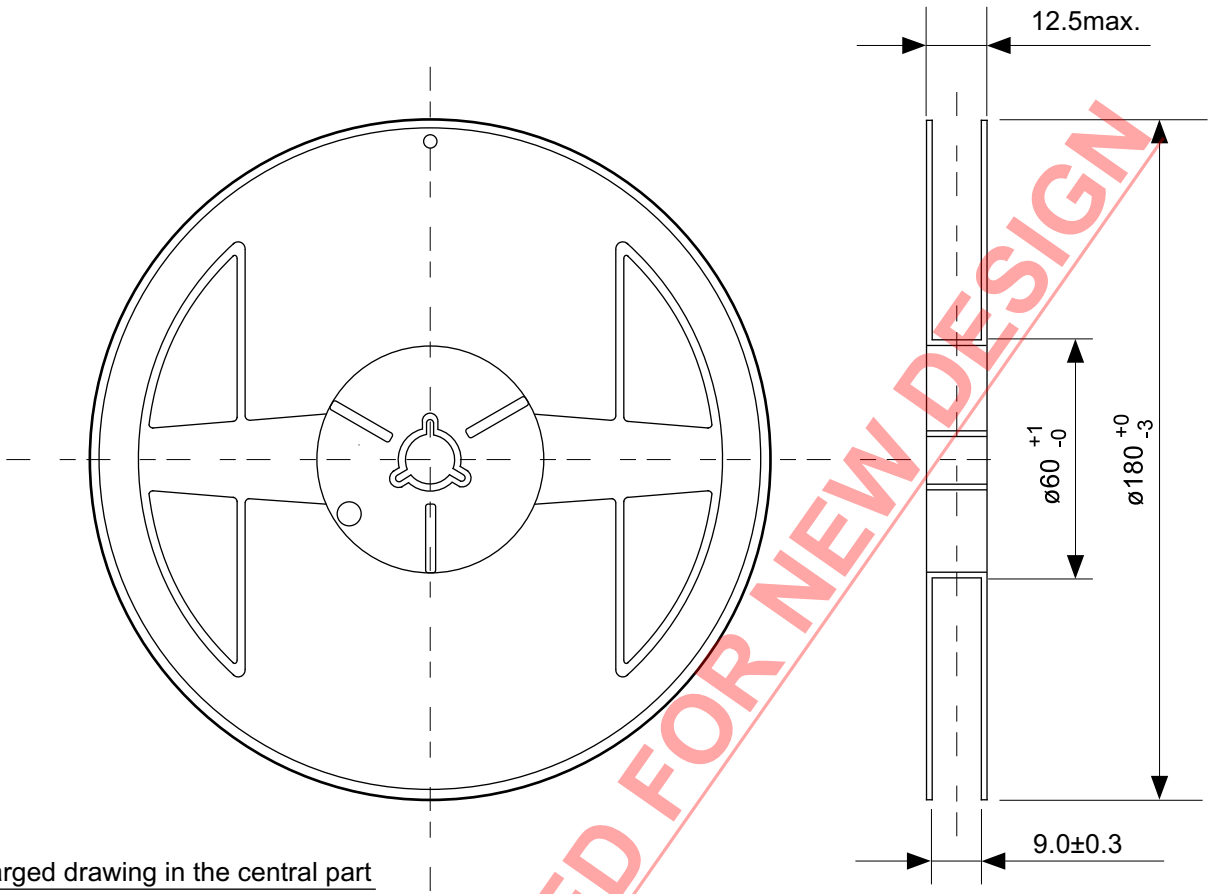


Enlarged drawing in the central part

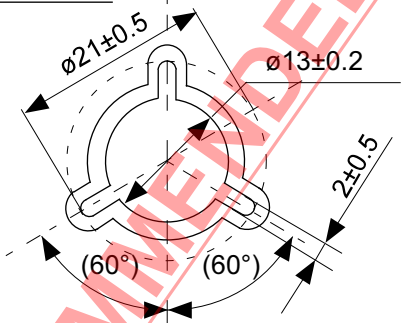


No. PG006-A-R-SD-1.0

NOT RECOMMENDED FOR NEW DESIGN

| | | | |
|---|---|---|---|
| TITLE | SNT-6A-A-Reel | | |
| No. | PG006-A-R-SD-1.0 | | |
| ANGLE | | QTY. | 5,000 |
| UNIT | mm | | |
| | | | |
| ABLIC Inc. | | | |

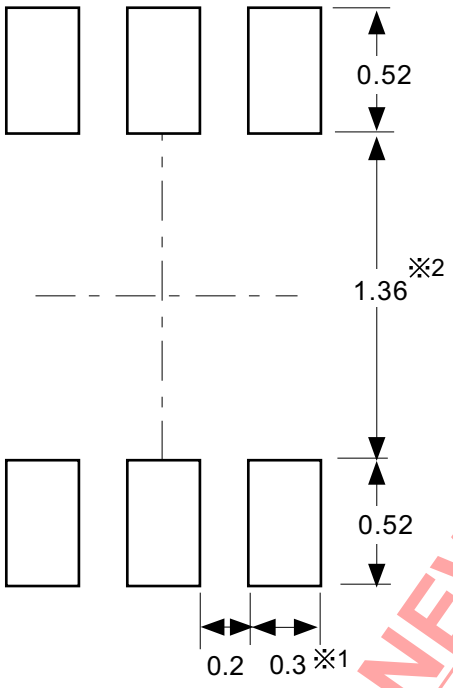


※1. ランドパターンの幅に注意してください (0.25 mm min. / 0.30 mm typ.)。
※2. パッケージ中央にランドパターンを広げないでください (1.30 mm ~ 1.40 mm)。

注意 1. パッケージのモールド樹脂下にシルク印刷やハンダ印刷などしないでください。
2. パッケージ下の配線上のソルダーレジストなどの厚みをランドパターン表面から0.03 mm 以下にしてください。
3. マスク開口サイズと開口位置はランドパターンと合わせてください。
4. 詳細は〝SNTパッケージ活用の手引き〟を参照してください。

※1. Pay attention to the land pattern width (0.25 mm min. / 0.30 mm typ.).
※2. Do not widen the land pattern to the center of the package ( 1.30 mm ~ 1.40 mm ).

**Caution 1. Do not do silkscreen printing and solder printing under the mold resin of the package.**
**2. The thickness of the solder resist on the wire pattern under the package should be 0.03 mm or less from the land pattern surface.**
**3. Match the mask aperture size and aperture position with the land pattern.**
**4. Refer to "SNT Package User's Guide" for details.**

※1. 请注意焊盘模式的宽度 (0.25 mm min. / 0.30 mm typ.)。
※2. 请勿向封装中间扩展焊盘模式 (1.30 mm ~ 1.40 mm)。

**注意 1. 请勿在树脂型封装的下面印刷丝网、焊锡。**
**2. 在封装下、布线上的阻焊膜厚度 (从焊盘模式表面起) 请控制在 0.03 mm 以下。**
**3. 钢网的开口尺寸和开口位置请与焊盘模式对齐。**
**4. 详细内容请参阅 "SNT 封装的应用指南"。**

NOT RECOMMENDED FOR NEW DESIGN

No. PG006-A-L-SD-4.1

| | |
|---|---|
| TITLE | SNT-6A-A -Land Recommendation |
| No. | PG006-A-L-SD-4.1 |
| ANGLE | |
| UNIT | mm |
| | |

**ABLIC Inc.**

## Disclaimers (Handling Precautions)

1. All the information described herein (product data, specifications, figures, tables, programs, algorithms and application circuit examples, etc.) is current as of publishing date of this document and is subject to change without notice.
2. The circuit examples and the usages described herein are for reference only, and do not guarantee the success of any specific mass-production design.
   ABLIC Inc. is not liable for any losses, damages, claims or demands caused by the reasons other than the products described herein (hereinafter "the products") or infringement of third-party intellectual property right and any other right due to the use of the information described herein.
3. ABLIC Inc. is not liable for any losses, damages, claims or demands caused by the incorrect information described herein.
4. Be careful to use the products within their ranges described herein. Pay special attention for use to the absolute maximum ratings, operation voltage range and electrical characteristics, etc.
   ABLIC Inc. is not liable for any losses, damages, claims or demands caused by failures and / or accidents, etc. due to the use of the products outside their specified ranges.
5. Before using the products, confirm their applications, and the laws and regulations of the region or country where they are used and verify suitability, safety and other factors for the intended use.
6. When exporting the products, comply with the Foreign Exchange and Foreign Trade Act and all other export-related laws, and follow the required procedures.
7. The products are strictly prohibited from using, providing or exporting for the purposes of the development of weapons of mass destruction or military use. ABLIC Inc. is not liable for any losses, damages, claims or demands caused by any provision or export to the person or entity who intends to develop, manufacture, use or store nuclear, biological or chemical weapons or missiles, or use any other military purposes.
8. The products are not designed to be used as part of any device or equipment that may affect the human body, human life, or assets (such as medical equipment, disaster prevention systems, security systems, combustion control systems, infrastructure control systems, vehicle equipment, traffic systems, in-vehicle equipment, aviation equipment, aerospace equipment, and nuclear-related equipment), excluding when specified for in-vehicle use or other uses by ABLIC, Inc. Do not apply the products to the above listed devices and equipments.
   ABLIC Inc. is not liable for any losses, damages, claims or demands caused by unauthorized or unspecified use of the products.
9. In general, semiconductor products may fail or malfunction with some probability. The user of the products should therefore take responsibility to give thorough consideration to safety design including redundancy, fire spread prevention measures, and malfunction prevention to prevent accidents causing injury or death, fires and social damage, etc. that may ensue from the products' failure or malfunction.
   The entire system in which the products are used must be sufficiently evaluated and judged whether the products are allowed to apply for the system on customer's own responsibility.
10. The products are not designed to be radiation-proof. The necessary radiation measures should be taken in the product design by the customer depending on the intended use.
11. The products do not affect human health under normal use. However, they contain chemical substances and heavy metals and should therefore not be put in the mouth. The fracture surfaces of wafers and chips may be sharp. Be careful when handling these with the bare hands to prevent injuries, etc.
12. When disposing of the products, comply with the laws and ordinances of the country or region where they are used.
13. The information described herein contains copyright information and know-how of ABLIC Inc. The information described herein does not convey any license under any intellectual property rights or any other rights belonging to ABLIC Inc. or a third party. Reproduction or copying of the information from this document or any part of this document described herein for the purpose of disclosing it to a third-party is strictly prohibited without the express permission of ABLIC Inc.
14. For more details on the information described herein or any other questions, please contact ABLIC Inc.'s sales representative.
15. This Disclaimers have been delivered in a text using the Japanese language, which text, despite any translations into the English language and the Chinese language, shall be controlling.

NOT RECOMMENDED FOR NEW DESIGN

ENTEGRECİ

Bu belge www.entegreci.com üzerinden sunulmaktadır.

# Elektronik komponent tedarikinde Entegreci

Entegreci, Eskişehir merkezli, Türkiye geneline satış yapan bir elektronik komponent mağazasıdır. Entegreler (IC), mikrodenetleyiciler, transistörler, diyotlar, pasif elemanlar, konnektörler, modüller ve geliştirme kartları tek adetten seri üretim adetlerine kadar satılır. Ürün sayfalarında güncel stok durumunu, fiyatı ve datasheet bağlantısını bulabilirsiniz.

### Parça koduyla arama

Üretici parça numarasını yazın; stok ve fiyatı hemen görün.

**www.entegreci.com**

### Ürün kategorileri

Entegreden kapasitöre tüm elektronik komponent kategorileri.

**Kategorilere göz atın**

### Üreticiler

Aradığınız üreticinin ürünlerini tek sayfada inceleyin.

**Üreticileri görün**

### Toplu alım ve teklif

Listede olmayan ya da yüksek adetli parçalar için teklif isteyin.

**Teklif isteyin**

**www.entegreci.com** | **destek@entegreci.com** | **0850 305 90 34**

Entegreci is an online electronic components store based in Türkiye. Search by manufacturer part number to see stock, prices and datasheets for integrated circuits, microcontrollers, transistors, passive components and connectors, or request a quote for parts that are not listed.

Bu sayfa Entegreci tarafından eklenmiştir. Belgenin önceki sayfaları asıl yayıncısına aittir ve içeriği değiştirilmemiştir; en güncel sürüm için belgenin yayıncısına başvurun.