S-8244 Series

BATTERY PROTECTION IC FOR 1-SERIAL TO 4-SERIAL-CELL PACK (SECONDARY PROTECTION)

www.ablic.com

© ABLIC Inc., 2003-2020

Rev.7.1_00

The S-8244 Series is used for secondary protection of lithium-ion batteries with from one to four cells, and incorporates a high-precision voltage detector circuit and a delay circuit. Short-circuiting between cells makes it possible for serial connection of one to four cells.

■ Features

(1) Internal high-precision voltage detector circuit

- Overcharge detection voltage range: 3.700 V to 4.550 V: Accuracy of ± 25 mV (at +25°C)
  (at a 5 mV/step) Accuracy of ± 50 mV (at –40°C to +85°C)
- Hysteresis: 5 types
  0.38 ± 0.1 V, 0.25 ± 0.07 V, 0.13 ± 0.04 V, 0.045 ± 0.02 V, None

(2) High-withstand voltage: Absolute maximum rating: 26 V

(3) Wide operating voltage range: 3.6 V to 24 V (refers to the range in which the delay circuit can operate normally after overvoltage is detected)

(4) Delay time during detection: Can be set by an external capacitor.

(5) Low current consumption:
At 3.5 V for each cell: 3.0 µA max. (+25°C)
At 2.3 V for each cell: 2.4 µA max. (+25°C)

(6) Output logic and form: 5 types
CMOS output active “H”
CMOS output active “L”
Pch open drain output active “L”
Nch open drain output active “H”
Nch open drain output active “L”
(CMOS / Nch open drain output for 0.045 V hysteresis models)

(7) Lead-free (Sn 100%), halogen-free

■ Applications

- Lithium ion rechargeable battery packs (secondary protection)

■ Packages

- SNT-8A
- TMSOP-8

■ Block Diagram

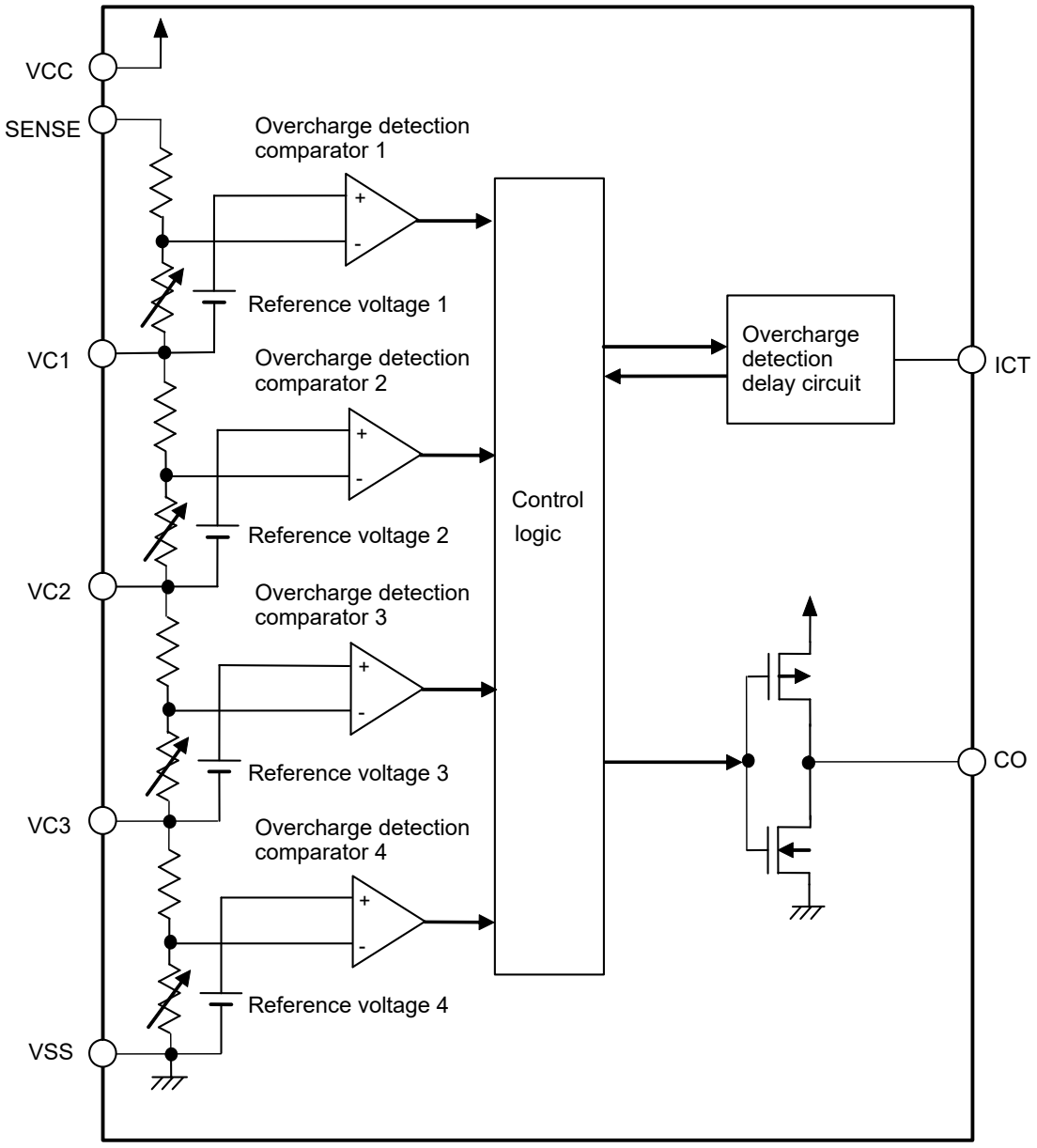

Remark In the case of Nch open-drain output, only the Nch transistor will be connected to the CO pin.
In the case of Pch open-drain output, only the Pch transistor will be connected to the CO pin.

Figure 1

■ Product Name Structure

1. Product Name

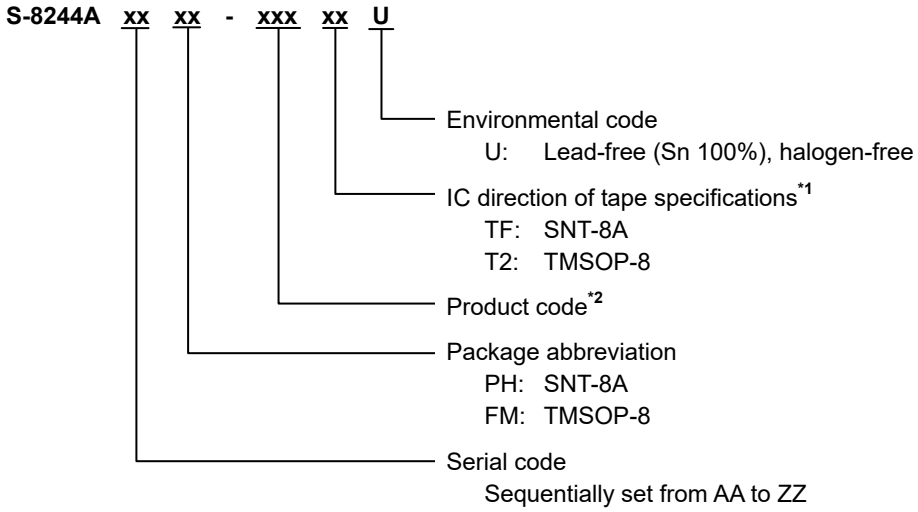

***1.** Refer to the tape drawing.
***2.** Refer to "**3. Product Name List**".

2. Packages

Package name	Drawing code			
	Package	Tape	Reel	Land
SNT-8A	PH008-A-P-SD	PH008-A-C-SD	PH008-A-R-SD	PH008-A-L-SD
TMSOP-8	FM008-A-P-SD	FM008-A-C-SD	FM008-A-R-SD	—

3. Product Name List

(1) SNT-8A

Table 1

Product name	Overcharge detection voltage [V_{CU}]	Overcharge hysteresis voltage [V_{CD}]	Output logic and form
S-8244AAAPH-CEATFU	4.450 ± 0.025 V	0.38 ± 0.1 V	CMOS output active “H”
S-8244AABPH-CEBTFU	4.200 ± 0.025 V	0 V	Nch open drain output active “H”
S-8244AADPH-CEDTFU	4.200 ± 0.025 V	0 V	Pch open drain output active “L”
S-8244AAFPH-CEFTFU	4.350 ± 0.025 V	0.045 ± 0.02 V	CMOS output active “H”
S-8244AAGPH-CEGTFU	4.450 ± 0.025 V	0.045 ± 0.02 V	CMOS output active “H”
S-8244AAJPH-CEJTFU	4.500 ± 0.025 V	0.38 ± 0.1 V	CMOS output active “H”
S-8244AASPH-CESTFU	4.350 ± 0.025 V	0.38 ± 0.1 V	CMOS output active “H”
S-8244AATPH-CETTFU	4.200 ± 0.025 V	0.25 ± 0.07 V	CMOS output active “H”
S-8244AAVPH-CEVTFU	4.275 ± 0.025 V	0.045 ± 0.02 V	CMOS output active “H”
S-8244AAYPH-CEYTFU	4.300 ± 0.025 V	0.25 ± 0.07 V	CMOS output active “H”
S-8244AAZPH-CEZTFU	4.280 ± 0.025 V	0.25 ± 0.07 V	CMOS output active “H”
S-8244ABBPH-CFBTFU	4.380 ± 0.025 V	0.25 ± 0.07 V	CMOS output active “H”
S-8244ABDPH-CFDTFU	4.150 ± 0.025 V	0.045 ± 0.02 V	CMOS output active “L”
S-8244ABEPH-CFETFU	4.215 ± 0.025 V	0 V	Nch open drain output active “L”
S-8244ABHPH-CFHTFU	4.280 ± 0.025 V	0.045 ± 0.02 V	CMOS output active “H”
S-8244ABMPH-CFMTFU	4.100 ± 0.025 V	0.25 ± 0.07 V	CMOS output active “H”
S-8244ABOPH-CFOTFU	4.550 ± 0.025 V	0.38 ± 0.1 V	CMOS output active “H”

Remark Please contact our sales representatives for products other than the above.

(2) TMSOP-8

Table 2

Product name	Overcharge detection voltage [V_{CU}]	Overcharge hysteresis voltage [V_{CD}]	Output logic and form
S-8244AAAFM-CEAT2U	4.450 ± 0.025 V	0.38 ± 0.1 V	CMOS output active “H”
S-8244AABFM-CEBT2U	4.200 ± 0.025 V	0 V	Nch open drain output active “H”
S-8244AACFM-CECT2U	4.115 ± 0.025 V	0.13 ± 0.04 V	CMOS output active “H”
S-8244AAFFM-CEFT2U	4.350 ± 0.025 V	0.045 ± 0.02 V	CMOS output active “H”
S-8244AAGFM-CEGT2U	4.450 ± 0.025 V	0.045 ± 0.02 V	CMOS output active “H”
S-8244AAHFM-CEHT2U	4.300 ± 0.025 V	0.25 ± 0.07 V	CMOS output active “H”
S-8244AAIFM-CEIT2U	4.400 ± 0.025 V	0.045 ± 0.02 V	CMOS output active “H”
S-8244AAJFM-CEJT2U	4.500 ± 0.025 V	0.38 ± 0.1 V	CMOS output active “H”
S-8244AALFM-CELT2U	4.350 ± 0.025 V	0.25 ± 0.07 V	CMOS output active “H”
S-8244AANFM-CENT2U	4.150 ± 0.025 V	0.25 ± 0.07 V	CMOS output active “H”
S-8244AAOFM-CEOT2U	4.250 ± 0.025 V	0.25 ± 0.07 V	CMOS output active “H”
S-8244AAPFM-CEPT2U	4.050 ± 0.025 V	0.25 ± 0.07 V	CMOS output active “H”
S-8244AAQFM-CEQT2U	4.150 ± 0.025 V	0 V	Nch open drain output active “H”
S-8244AATFM-CETT2U	4.200 ± 0.025 V	0.25 ± 0.07 V	CMOS output active “H”
S-8244AAUFM-CEUT2U	3.825 ± 0.025 V	0.25 ± 0.07 V	CMOS output active “H”
S-8244AAVFM-CEVT2U	4.275 ± 0.025 V	0.045 ± 0.02 V	CMOS output active “H”
S-8244AAXFM-CEXT2U	4.025 ± 0.025 V	0.25 ± 0.07 V	CMOS output active “H”
S-8244ABAFM-CFAT2U	4.220 ± 0.025 V	0.045 ± 0.02 V	CMOS output active “H”
S-8244ABCFM-CFCT2U	3.750 ± 0.025 V	0.25 ± 0.07 V	CMOS output active “H”
S-8244ABGFM-CFGT2U	4.225 ± 0.025 V	0.045 ± 0.02 V	Nch open drain output active “L”
S-8244ABIFM-CFIT2U	4.100 ± 0.025 V	0 V	Nch open drain output active “L”
S-8244ABJFM-CFJT2U	4.325 ± 0.025 V	0.045 ± 0.02 V	Nch open drain output active “L”
S-8244ABKFM-CFKT2U	4.175 ± 0.025 V	0 V	Nch open drain output active “L”
S-8244ABNFM-CFNT2U	4.225 ± 0.025 V	0.38 ± 0.1 V	Nch open drain output active “L”
S-8244ABPFM-CFPT2U	4.350 ± 0.025 V	0.38 ± 0.1 V	Nch open drain output active “L”

Remark Please contact our sales representatives for products other than the above.

■ Pin Configurations

SNT-8A
Top view

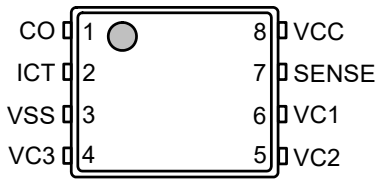

Figure 2

Table 3

Pin No.	Symbol	Description
1	CO	FET gate connection pin for charge control
2	ICT	Capacitor connection pin for overcharge detection delay
3	VSS	Input pin for negative power supply, Connection pin for battery 4's negative voltage
4	VC3	Connection pin for battery 3's negative voltage, Connection pin for battery 4's positive voltage
5	VC2	Connection pin for battery 2's negative voltage, Connection pin for battery 3's positive voltage
6	VC1	Connection pin for battery 1's negative voltage, Connection pin for battery 2's positive voltage
7	SENSE	Connection pin for battery 1's positive voltage
8	VCC	Input pin for positive power supply

TMSOP-8
Top view

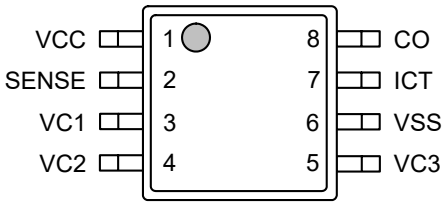

Figure 3

Table 4

Pin No.	Symbol	Description
1	VCC	Input pin for positive power supply
2	SENSE	Connection pin for battery 1's positive voltage
3	VC1	Connection pin for battery 1's negative voltage, Connection pin for battery 2's positive voltage
4	VC2	Connection pin for battery 2's negative voltage, Connection pin for battery 3's positive voltage
5	VC3	Connection pin for battery 3's negative voltage, Connection pin for battery 4's positive voltage
6	VSS	Input pin for negative power supply, Connection pin for battery 4's negative voltage
7	ICT	Capacitor connection pin for overcharge detection delay
8	CO	FET gate connection pin for charge control

■ Absolute Maximum Ratings

Table 5

(Ta = 25°C unless otherwise specified)

Item		Symbol	Applied pin	Absolute maximum rating	Unit
Input voltage between VCC and VSS		V_{DS}	VCC	V_{SS}–0.3 to V_{SS} +26	V
Delay capacitor connection pin voltage		V_{ICT}	ICT	V_{SS} –0.3 to V_{CC} +0.3	V
Input pin voltage		V_{IN}	SENSE, VC1, VC2, VC3	V_{SS} –0.3 to V_{CC} +0.3	V
CO output pin voltage	(CMOS output)	V_{CO}	CO	V_{SS} –0.3 to V_{CC} +0.3	V
	(Nch open drain output)			V_{SS} –0.3 to 26	V
	(Pch open drain output)			V_{CC} –26 to V_{CC} +0.3	V
Power dissipation	SNT-8A	P_D	—	450*1	mW
	TMSOP-8			650*1	mW
Operating ambient temperature		T_{opr}	—	–40 to +85	°C
Storage temperature		T_{stg}	—	–40 to +125	°C

***1.** When mounted on board

[Mounted board]

(1) Board size : 114.3 mm × 76.2 mm × t1.6 mm

(2) Name : JEDEC STANDARD51-7

Caution The absolute maximum ratings are rated values exceeding which the product could suffer physical damage. These values must therefore not be exceeded under any conditions.

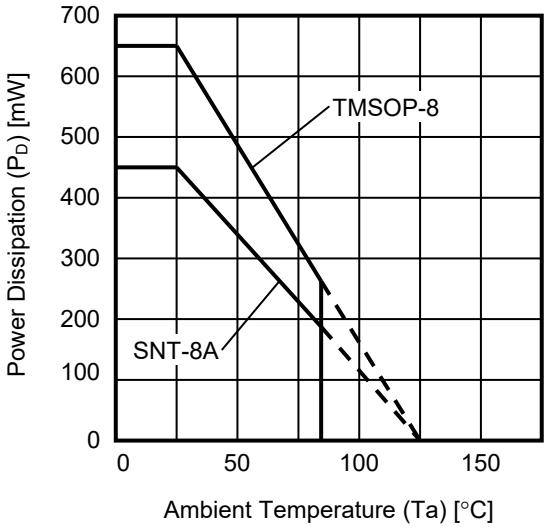

Figure 4 Power Dissipation of Package (When Mounted on Board)

■ Electrical Characteristics

Table 6

(Ta = 25 °C unless otherwise specified)

Item	Symbol	Condition	Min.	Typ.	Max.	Unit	Test condition	Test circuit
DETECTION VOLTAGE								
Overcharge detection voltage 1 *1	V_{CU1}	3.7 V to 4.55 V Adjustment	V_{CU1} −0.025	V_{CU1}	V_{CU1} +0.025	V	1	1
Overcharge detection voltage 2 *1	V_{CU2}	3.7 V to 4.55 V Adjustment	V_{CU2} −0.025	V_{CU2}	V_{CU2} +0.025	V	2	1
Overcharge detection voltage 3 *1	V_{CU3}	3.7 V to 4.55 V Adjustment	V_{CU3} −0.025	V_{CU3}	V_{CU3} +0.025	V	3	1
Overcharge detection voltage 4 *1	V_{CU4}	3.7 V to 4.55 V Adjustment	V_{CU4} −0.025	V_{CU4}	V_{CU4} +0.025	V	4	1
Overcharge hysteresis voltage 1 *2	V_{CD1}	—	0.28	0.38	0.48	V	1	1
Overcharge hysteresis voltage 2 *2	V_{CD2}	—	0.28	0.38	0.48	V	2	1
Overcharge hysteresis voltage 3 *2	V_{CD3}	—	0.28	0.38	0.48	V	3	1
Overcharge hysteresis voltage 4 *2	V_{CD4}	—	0.28	0.38	0.48	V	4	1
Detection voltage temperature coefficient *3	T_{COE}	Ta = −40°C to +85°C*4	−0.4	0.0	+0.4	mV/°C	—	—
DELAY TIME								
Overcharge detection delay time	t_{CU}	C = 0.1 µF	1.0	1.5	2.0	s	5	2
OPERATING VOLTAGE								
Operating voltage between VCC and VSS *5	V_{DSOP}	—	3.6	—	24	V	—	—
CURRENT CONSUMPTION								
Current consumption during normal operation	I_{OPE}	V1 = V2 = V3 = V4 = 3.5 V	—	1.5	3.0	µA	6	3
Current consumption at power down	I_{PDN}	V1 = V2 = V3 = V4 = 2.3 V	—	1.2	2.4	µA	6	3
VC1 sink current	I_{VC1}	V1 = V2 = V3 = V4 = 3.5 V	−0.3	—	0.3	µA	6	3
VC2 sink current	I_{VC2}	V1 = V2 = V3 = V4 = 3.5 V	−0.3	—	0.3	µA	6	3
VC3 sink current	I_{VC3}	V1 = V2 = V3 = V4 = 3.5 V	−0.3	—	0.3	µA	6	3
OUTPUT VOLTAGE*6								
CO “H” voltage	$V_{CO(H)}$	at I_{OUT} = 10 µA	V_{CC} −0.05	—	—	V	7	4
CO “L” voltage	$V_{CO(L)}$	at I_{OUT} = 10 µA	—	—	V_{SS} +0.05	V	7	4

***1.** ± 50 mV when Ta = −40°C to +85°C.

***2.** 0.25 ± 0.07 V, 0.13 ± 0.04 V, 0.045 ± 0.02 V except for 0.38 V hysteresis models.

***3.** Overcharge detection voltage or overcharge hysteresis voltage.

***4.** Since products are not screened at high and low temperature, the specification for this temperature range is guaranteed by design, not tested in production.

***5.** After detecting the overcharge, the delay circuit operates normally in the range of operating voltage.

***6.** Output logic and CMOS or open drain output can be selected.

■ Test Circuits

(1) Test Condition 1, Test Circuit 1

Set switches 1 and 2 to OFF for CMOS output product.
Set switch 1 to ON and switch 2 to OFF for Nch open drain product.
Set switch 1 to OFF and switch 2 to ON for Pch open drain product.

- Product with CMOS output active “H”, Nch open drain output active “H”

  The overcharge detection voltage 1 (V_{CU1}) is a voltage at V1; when the CO pin’s voltage is set to “H” by increasing V1 gradually, after setting V1 = V2 = V3 = V4 = 3.5 V. After that, gradually decreasing V1’s voltage to set CO = “L”, and the difference of this V1’s voltage and V_{CU1} is the overcharge hysteresis voltage 1 (V_{CD1}).

- Product with CMOS output active “L”, Nch open drain output active “L”, Pch open drain output active “L”

  The overcharge detection voltage 1 (V_{CU1}) is a voltage at V1; when the CO pin’s voltage is set to “L” by increasing V1 gradually, after setting V1 = V2 = V3 = V4 = 3.5 V. After that, gradually decreasing V1’s voltage to set CO = “H”, and the difference of this V1’s voltage and V_{CU1} is the overcharge hysteresis voltage 1 (V_{CD1}).

(2) Test Condition 2, Test Circuit 1

Set switches 1 and 2 to OFF for CMOS output product.
Set switch 1 to ON and switch 2 to OFF for Nch open drain product.
Set switch 1 to OFF and switch 2 to ON for Pch open drain product.

- Product with CMOS output active “H”, Nch open drain output active “H”

  The overcharge detection voltage 2 (V_{CU2}) is a voltage at V2; when the CO pin’s voltage is set to “H” by increasing V2 gradually, after setting V1 = V2 = V3 = V4 = 3.5 V. After that, gradually decreasing V2’s voltage to set CO = “L”, and the difference of this V2’s voltage and V_{CU2} is the overcharge hysteresis voltage 2 (V_{CD2}).

- Product with CMOS output active “L”, Nch open drain output active “L”, Pch open drain output active “L”

  The overcharge detection voltage 2 (V_{CU2}) is a voltage at V2; when the CO pin’s voltage is set to “L” by increasing V2 gradually, after setting V1 = V2 = V3 = V4 = 3.5 V. After that, gradually decreasing V2’s voltage to set CO = “H”, and the difference of this V2’s voltage and V_{CU2} is the overcharge hysteresis voltage 2 (V_{CD2}).

(3) Test Condition 3, Test Circuit 1

Set switches 1 and 2 to OFF for CMOS output product.
Set switch 1 to ON and switch 2 to OFF for Nch open drain product.
Set switch 1 to OFF and switch 2 to ON for Pch open drain product.

- Product with CMOS output active “H”, Nch open drain output active “H”

  The overcharge detection voltage 3 (V_{CU3}) is a voltage at V3; when the CO pin’s voltage is set to “H” by increasing V3 gradually, after setting V1 = V2 = V3 = V4 = 3.5 V. After that, gradually decreasing V3’s voltage to set CO = “L”, and the difference of this V3’s voltage and V_{CU3} is the overcharge hysteresis voltage 3 (V_{CD3}).

- Product with CMOS output active “L”, Nch open drain output active “L”, Pch open drain output active “L”

  The overcharge detection voltage 3 (V_{CU3}) is a voltage at V3; when the CO pin’s voltage is set to “L” by increasing V3 gradually, after setting V1 = V2 = V3 = V4 = 3.5 V. After that, gradually decreasing V3’s voltage to set CO = “H”, and the difference of this V3’s voltage and V_{CU3} is the overcharge hysteresis voltage 3 (V_{CD3}).

(4) Test Condition 4, Test Circuit 1

Set switches 1 and 2 to OFF for CMOS output product.
Set switch 1 to ON and switch 2 to OFF for Nch open drain product.
Set switch 1 to OFF and switch 2 to ON for Pch open drain product.

- Product with CMOS output active “H”, Nch open drain output active “H”

  The overcharge detection voltage 4 (V_{CU4}) is a voltage at V4; when the CO pin’s voltage is set to “H” by increasing V4 gradually, after setting V1 = V2 = V3 = V4 = 3.5 V. After that, gradually decreasing V4’s voltage to set CO = “L”, and the difference of this V4’s voltage and V_{CU4} is the overcharge hysteresis voltage 4 (V_{CD4}).

- Product with CMOS output active “L”, Nch open drain output active “L”, Pch open drain output active “L”

  The overcharge detection voltage 4 (V_{CU4}) is a voltage at V4; when the CO pin’s voltage is set to “L” by increasing V4 gradually, after setting V1 = V2 = V3 = V4 = 3.5 V. After that, gradually decreasing V4’s voltage to set CO = “H”, and the difference of this V4’s voltage and V_{CU4} is the overcharge hysteresis voltage 4 (V_{CD4}).

(5) Test Condition 5, Test Circuit 2

Set switches 1 and 2 to OFF for CMOS output product.
Set switch 1 to ON and switch 2 to OFF for Nch open drain product.
Set switch 1 to OFF and switch 2 to ON for Pch open drain product.

- Product with CMOS output active “H”, Nch open drain output active “H”

  Rise V1 to 4.7 V momentarily within 10 μs after setting V1 = V2 = V3 = V4 = 3.5 V. The period from V1 having reached 4.7 V to CO = “H” is the overcharge detection delay time (t_{CU}).

- Product with CMOS output active “L”, Nch open drain output active “L”, Pch open drain output active “L”

  Rise V1 to 4.7 V momentarily within 10 μs after setting V1 = V2 = V3 = V4 = 3.5 V. The period from V1 having reached 4.7 V to CO = “L” is the overcharge detection delay time (t_{CU}).

(6) Test Condition 6, Test Circuit 3

Measure current consumption (I1) setting V1 = V2 = V3 = V4 = 2.3 V. This I1 is current consumption at power-down (I_{PDN}).
Measure current consumption (I1) setting V1 = V2 = V3 = V4 = 3.5 V. This I1 is current consumption during normal operation (I_{OPE}), I2 is the VC1 sink current (I_{VC1}), I3 is the VC2 sink current (I_{VC2}), I4 is the VC3 sink current (I_{VC3}).

(7) Test Condition 7, Test Circuit 4

Measure setting switch 1 to OFF and switch 2 to ON.

- Product with CMOS output active “H”

  Decrease V6 from V_{CC} gradually after setting V1 = V2 = V3 = V4 = 4.6 V, the V6’s voltage when flowing I2 = −10 μA is the $V_{CO(H)}$ voltage.
  Increase V6 from 0 V gradually after setting V1 = V2 = V3 = V4 = 3.5 V, the V6’s voltage when flowing I2 = 10 μA is the $V_{CO(L)}$ voltage.

- Product with CMOS output active “L”

  Decrease V6 from V_{CC} gradually after setting V1 = V2 = V3 = V4 = 3.5 V, the V6’s voltage when flowing I2 = −10 μA is the $V_{CO(H)}$ voltage.
  Increase V6 from 0 V gradually after setting V1 = V2 = V3 = V4 = 4.6 V, the V6’s voltage when flowing I2 = 10 μA is the $V_{CO(L)}$ voltage.

- Product with Pch open drain output active “L”

  Decrease V6 from V_{CC} gradually after setting V1 = V2 = V3 = V4 = 3.5 V, the V6’s voltage when flowing I2 = −10 μA is the $V_{CO(H)}$ voltage.

- Product with Nch open drain output active “H”

  Increase V6 from 0 V gradually after setting V1 = V2 = V3 = V4 = 3.5 V, the V6’s voltage when flowing I2 = 10 μA is the $V_{CO(L)}$ voltage.

- Product with Nch open drain output active “L”

  Increase V6 from 0 V gradually after setting V1 = V2 = V3 = V4 = 4.6 V, the V6’s voltage when flowing I2 = 10 μA is the $V_{CO(L)}$ voltage.

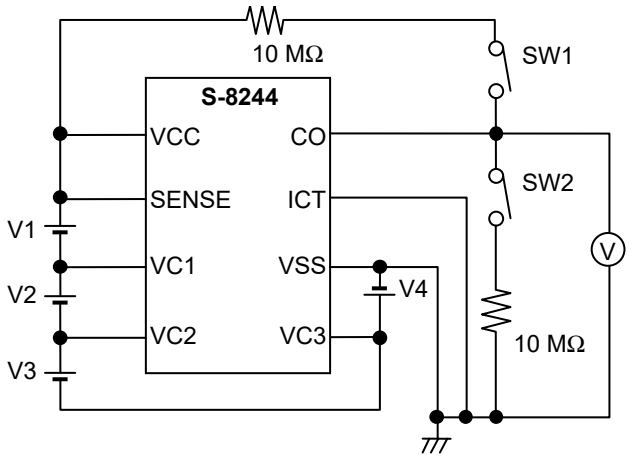

Test Circuit 1

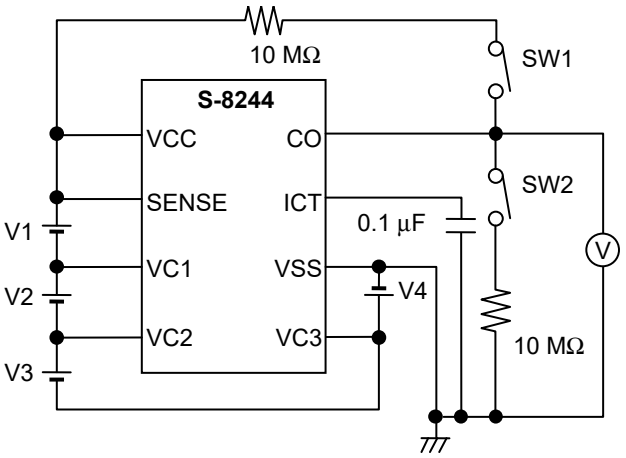

Test Circuit 2

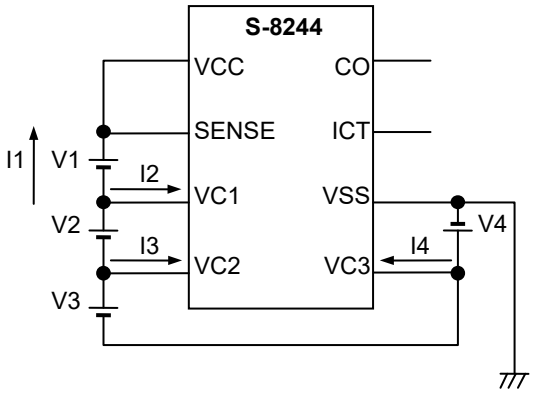

Test Circuit 3

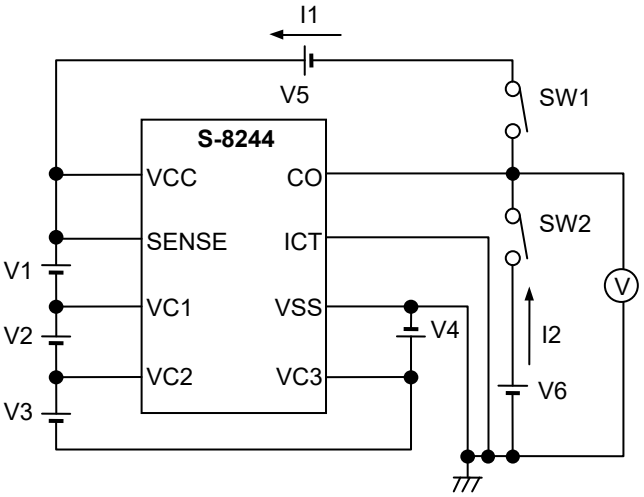

Test Circuit 4

Figure 5

■ Operation

Remark Refer to " ■ **Battery Protection IC Connection Example**".

1. Overcharge Detection

- Product with CMOS output active "H", Nch open drain output active "H"

  During charging in the normal status, the voltage of one of the batteries exceeds overcharge detection voltage (V_{CU}), and this status is maintained for overcharge detection delay time (t_{CU}) or longer, CO gets "H". This is overcharge status. Connecting a FET to the CO pin enables charge-control and the second protect.
  In this case, the IC maintains the overcharge status until the voltage of each of the batteries decreases, to the overcharge hysteresis voltage (V_{CD}) from the overcharge detection voltage (V_{CU}).

- Product with CMOS output active "L", Nch open drain output active "L", Pch open drain output active "L"

  During charging in the normal status, the voltage of one of the batteries exceeds overcharge detection voltage (V_{CU}), and this status is maintained for overcharge detection delay time (t_{CU}) or longer, CO gets "L". This is overcharge status. Connecting a FET to the CO pin enables charge-control and the second protect.
  In this case, the IC maintains the overcharge status until the voltage of each of the batteries decreases, to the overcharge hysteresis voltage (V_{CD}) from the overcharge detection voltage (V_{CU}).

2. Delay Circuit

The delay circuit rapidly charges the capacitor connected to the delay capacitor connection pin up to a specified voltage when the voltage of one of the batteries exceeds the overcharge detection voltage (V_{CU}). Then, the delay circuit gradually discharges the capacitor at 100 nA and inverts the CO output when the voltage at the delay capacitor connection pin goes below a specified level. Overcharge detection delay time (t_{CU}) varies depending upon the external capacitor.

Each delay time is calculated using the following equation.

	Min.	Typ.	Max.	
t_{CU}[s] = Delay Coefficient	(10,	15,	20)	$\times C_{ICT}$ [μF]

Because the delay capacitor is rapidly charged, the smaller the capacitance, the larger the difference between the maximum voltage and the specified value of delay capacitor pin (ICT pin). This will cause a deviation between the calculated delay time and the resultant delay time. Also, delay time is internally set in this IC to prevent the CO output from inverting until the charge to delay capacitor pin is reached to the specified voltage. If large capacitance is used, output may be enabled without delay time because charge is disabled within the internal delay time.
Please note that the maximum capacitance connected to the delay capacitor pin (ICT pin) is 1 μF.

■ Timing Chart

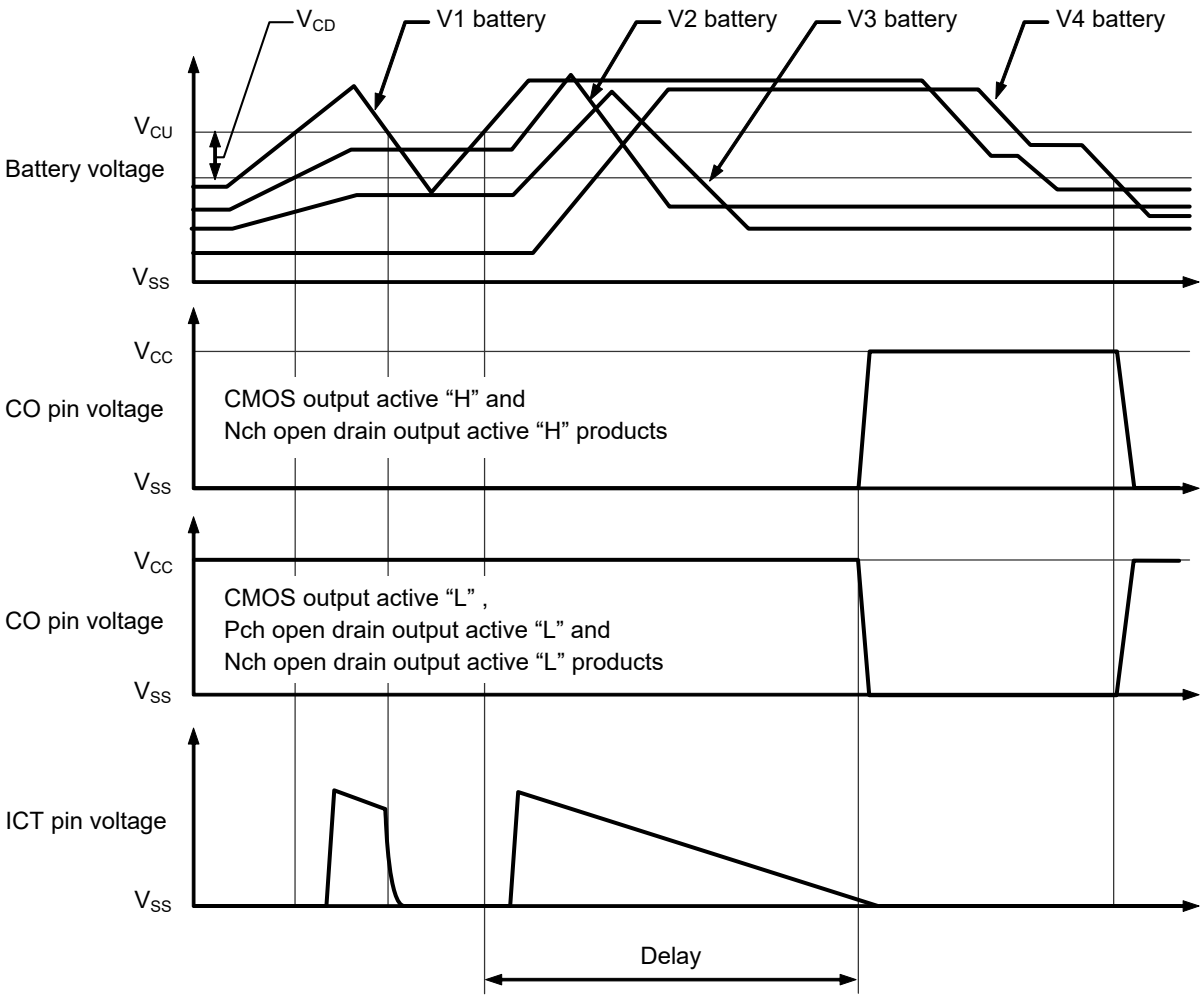

Figure 6

■ Battery Protection IC Connection Example

(1) Connection Example 1

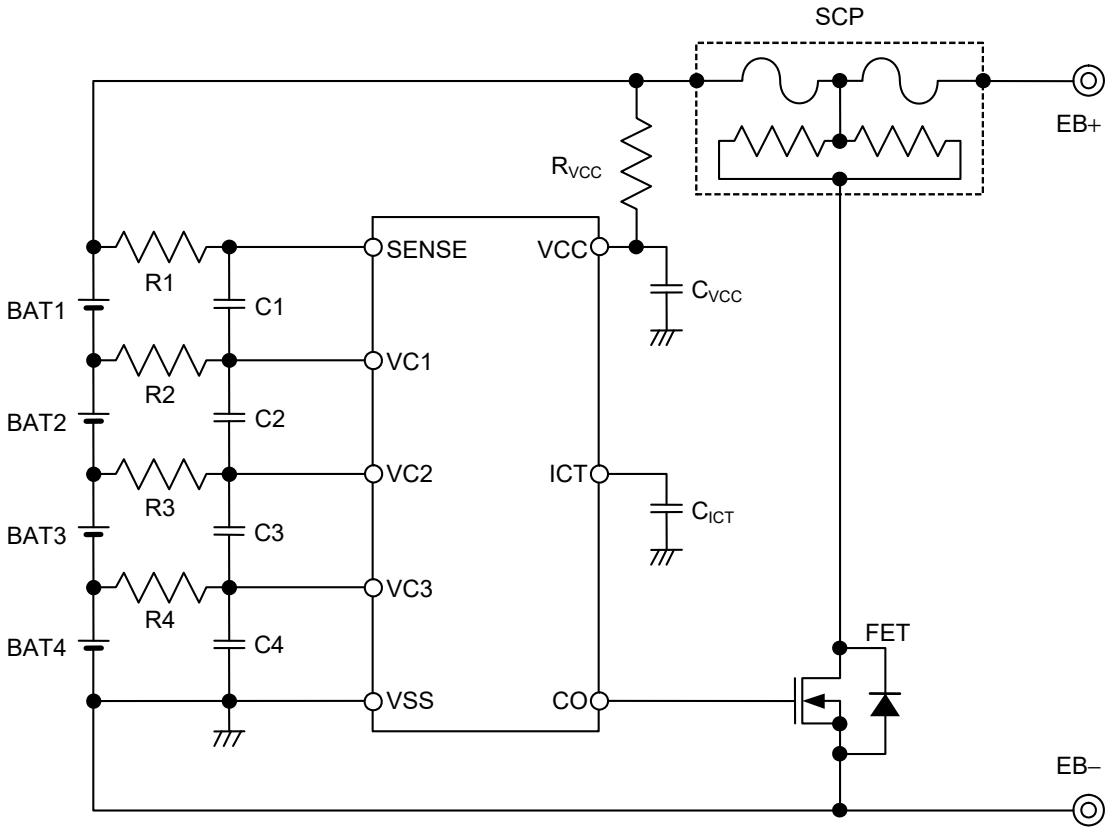

Figure 7

Table 7 Constants for External Components 1

Symbol	Min.	Typ.	Max.	Unit
R1 to R4	0	1 k	10 k	Ω
C1 to C4	0	0.1	1	μF
R_{VCC}	0	100	1 k	Ω
C_{VCC}	0	0.1	1	μF
C_{ICT}	0	0.1	1	μF

Caution1. The constants may be changed without notice.

2. It has not been confirmed whether the operation is normal or not in circuits other than the connection example. In addition, the connection example and the constants do not guarantee proper operation.
Perform thorough evaluation using the actual application to set the constants.

[For SCP, contact]

Global Sales & Marketing Division, Dexerials Corporation
Gate City Osaki East Tower 8F, 1-11-2
Osaki, Shinagawa-ku, Tokyo, 141-0032, Japan
TEL +81-3-5435-3946
Contact Us: http://www.dexerials.jp/en/

(2) Connection Example 2 (for 3-cells)

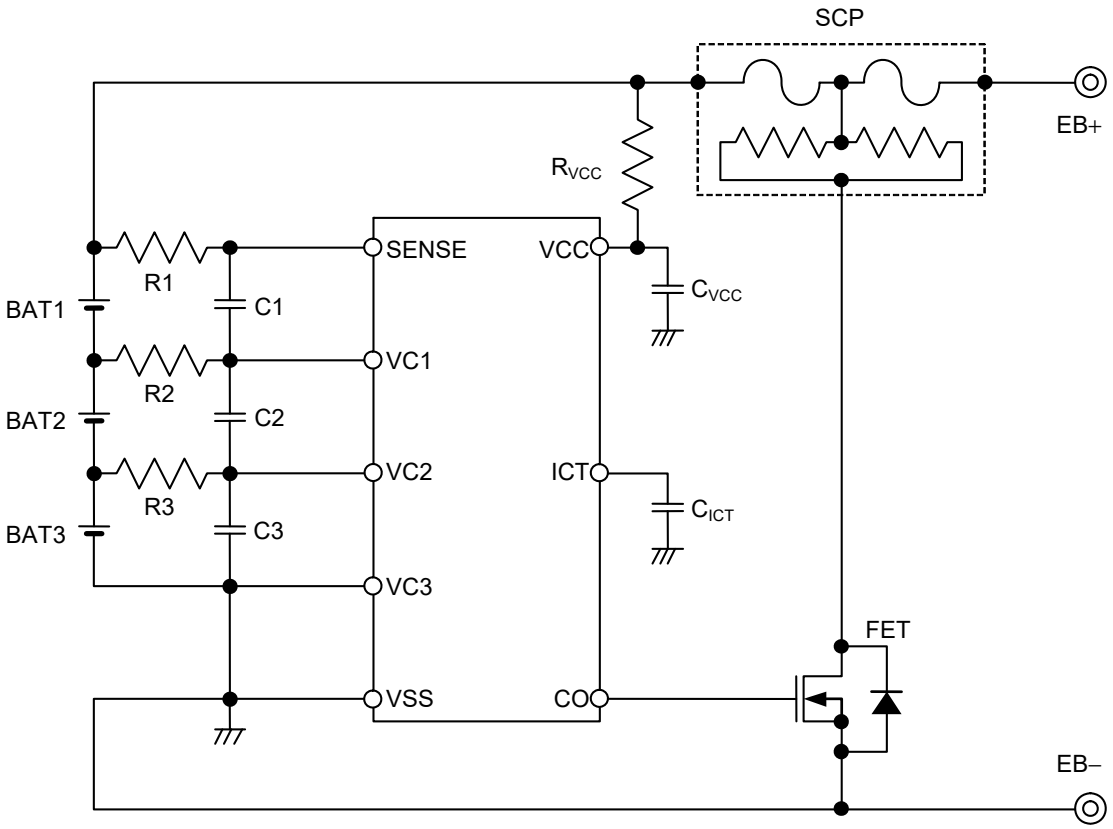

Figure 8

Table 8 Constants for External Components 2

Symbol	Min.	Typ.	Max.	Unit
R1 to R3	0	1 k	10 k	Ω
C1 to C3	0	0.1	1	μF
R_{VCC}	0	100	1 k	Ω
C_{VCC}	0	0.1	1	μF
C_{ICT}	0	0.1	1	μF

Caution1. The constants may be changed without notice.

2. It has not been confirmed whether the operation is normal or not in circuits other than the connection example. In addition, the connection example and the constants do not guarantee proper operation.
Perform thorough evaluation using the actual application to set the constants.

(3) Connection Example 3 (for 2-cells)

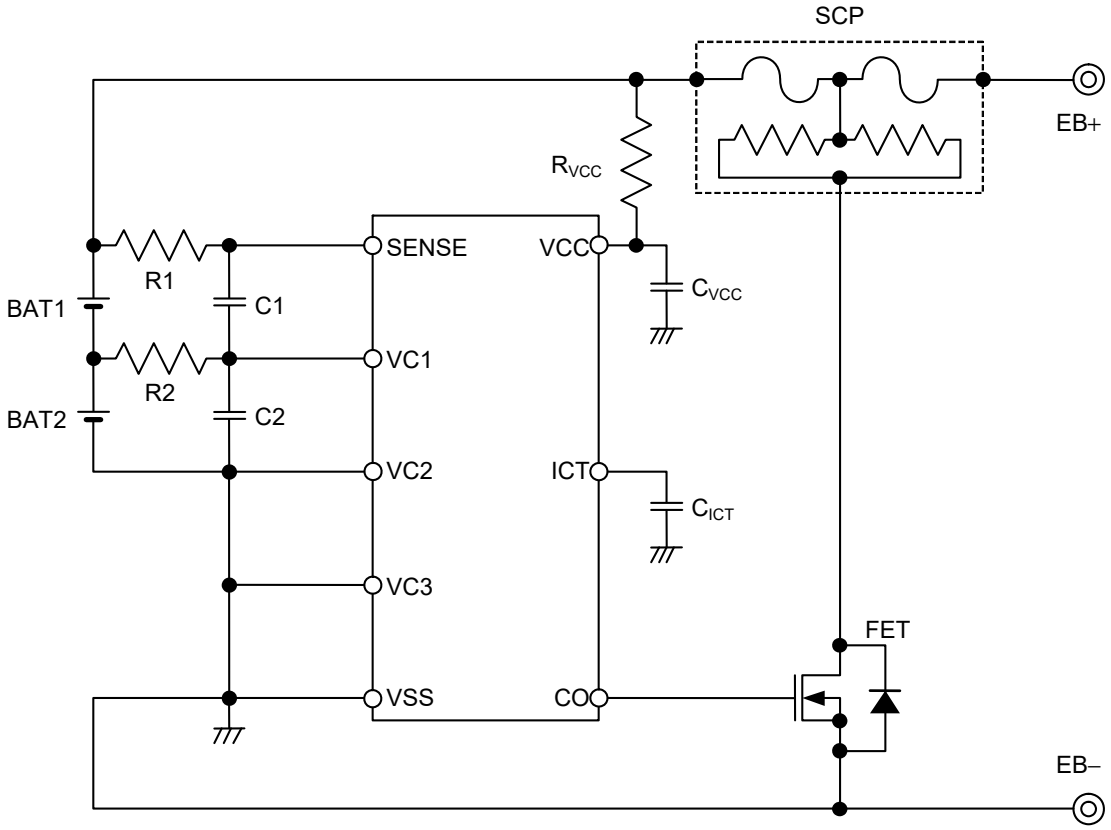

Figure 9

Table 9 Constants for External Components 3

Symbol	Min.	Typ.	Max.	Unit
R1, R2	0	1 k	10 k	Ω
C1, C2	0	0.1	1	μF
R_{VCC}	0	100	1 k	Ω
C_{VCC}	0	0.1	1	μF
C_{ICT}	0	0.1	1	μF

Caution1. The constants may be changed without notice.

2. It has not been confirmed whether the operation is normal or not in circuits other than the connection example. In addition, the connection example and the constants do not guarantee proper operation.
Perform thorough evaluation using the actual application to set the constants.

(4) Connection Example 4 (for 1-cell)

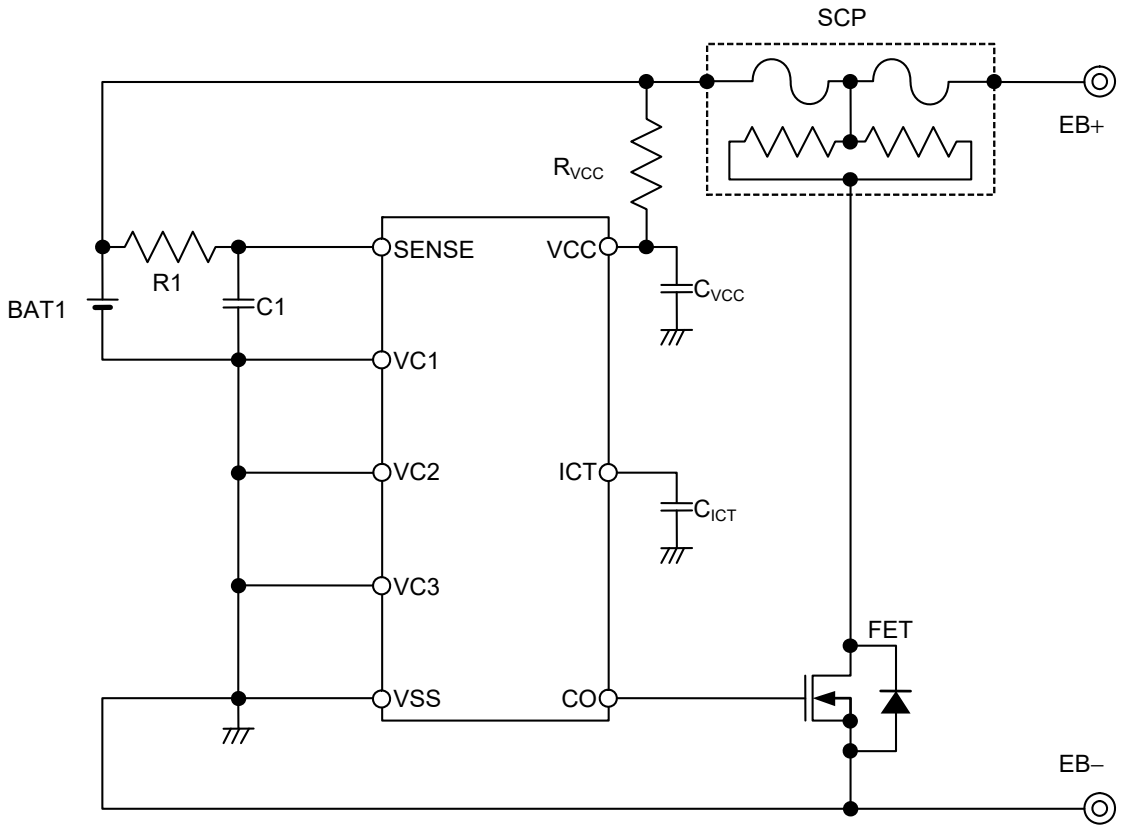

Figure 10

Table 10 Constants for External Components 4

Symbol	Min.	Typ.	Max.	Unit
R1	0	1 k	10 k	Ω
C1	0	0.1	1	μF
R_{VCC}	0	100	1 k	Ω
C_{VCC}	0	0.1	1	μF
C_{ICT}	0	0.1	1	μF

Caution1. The constants may be changed without notice.

2. It has not been confirmed whether the operation is normal or not in circuits other than the connection example. In addition, the connection example and the constants do not guarantee proper operation.
Perform thorough evaluation using the actual application to set the constants.

■ Precautions

- This IC charges the delay capacitor through the delay capacitor pin (ICT pin) immediately when the voltage of one of batteries V1 to V4 reaches the overcharge voltage. Therefore, setting the resistor connected to the VCC pin to any value greater than the recommended level causes a reduction in the IC power supply voltage because of charge current of the delay capacitor. This may lead to a malfunction. Set up the resistor NOT to exceed the typical value. If you change the resistance, please consult us.
- DO not connect any of overcharged batteries. Even if only one overcharged battery is connected to this IC, the IC detects overcharge, then charge current flows to the delay capacitor through the parasitic diode between pins where the battery is not connected yet. This may lead to a malfunction. Please perform sufficient evaluation in the case of use. Depending on an application circuit, even when the fault charge battery is not contained, the connection turn of a battery may be restricted in order to prevent the output of CO detection pulse at the time of battery connection.

CMOS output active “H” and Nch open drain output active “H” products

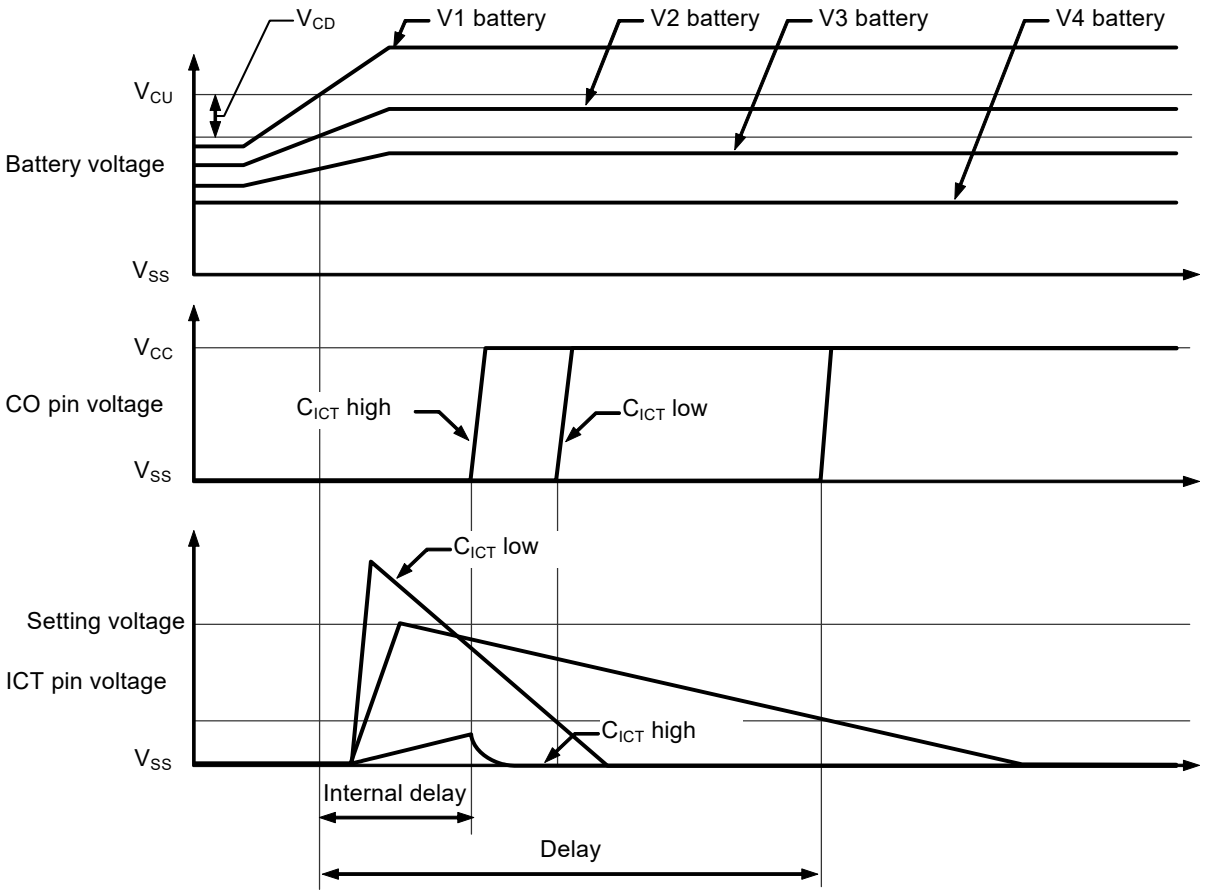

- In this IC, the output logic of the CO pin is inverted after several milliseconds of internal delay if this IC is under the overcharge condition even ICT pin is either “V_{SS}–short circuit,” “V_{CC}–short circuit” or “Open” status.
- Any position from V1 to V4 can be used when applying this IC for a one to three-cell battery. However, be sure to short circuit between pins not in use (SENSE–VC1, VC1–VC2, VC2–VC3, or VC3–VSS).
- The application conditions for the input voltage, output voltage, and load current should not exceed the package power dissipation.
- Do not apply an electrostatic discharge to this IC that exceeds the performance ratings of the built-in electrostatic protection circuit.
- ABLIC Inc. claims no responsibility for any and all disputes arising out of or in connection with any infringement of the products including this IC upon patents owned by a third party.

■ Characteristics (Typical Data)

1. Detection Voltage vs. Temperature

Overcharge Detection Voltage vs. Temperature

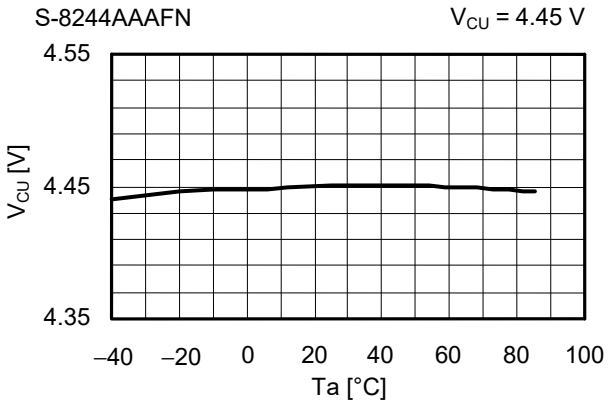

Overcharge Release Voltage vs. Temperature

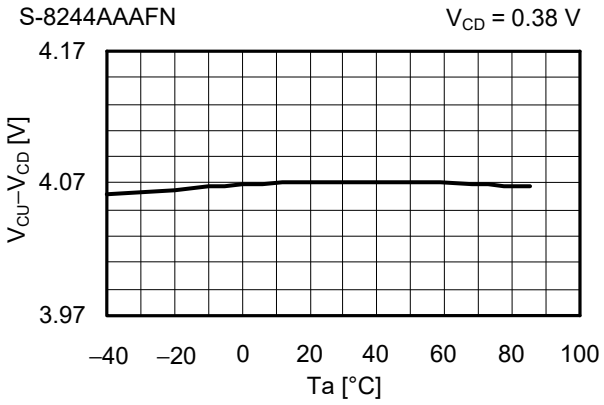

2. Current Consumption vs. Temperature

Current Consumption during Normal Operation vs. Temperature

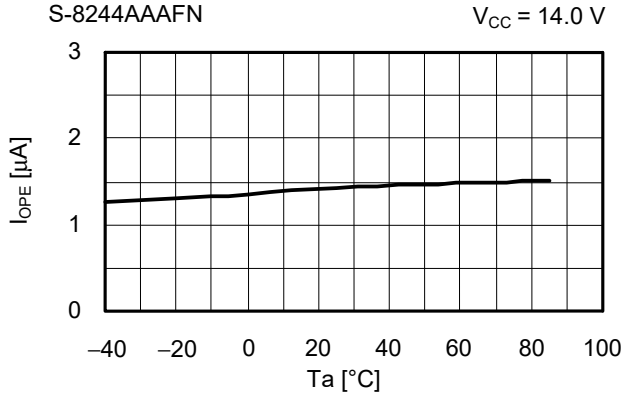

Current Consumption at Power Down vs. Temperature

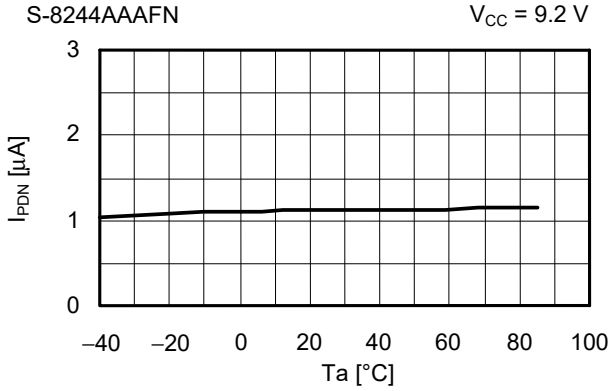

3. Delay Time vs. Temperature

Overcharge Detection Delay Time vs. Temperature

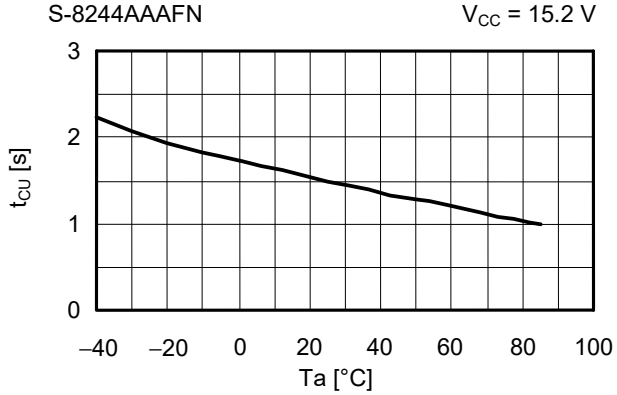

Caution Please design all applications of the S-8244 Series with safety in mind.

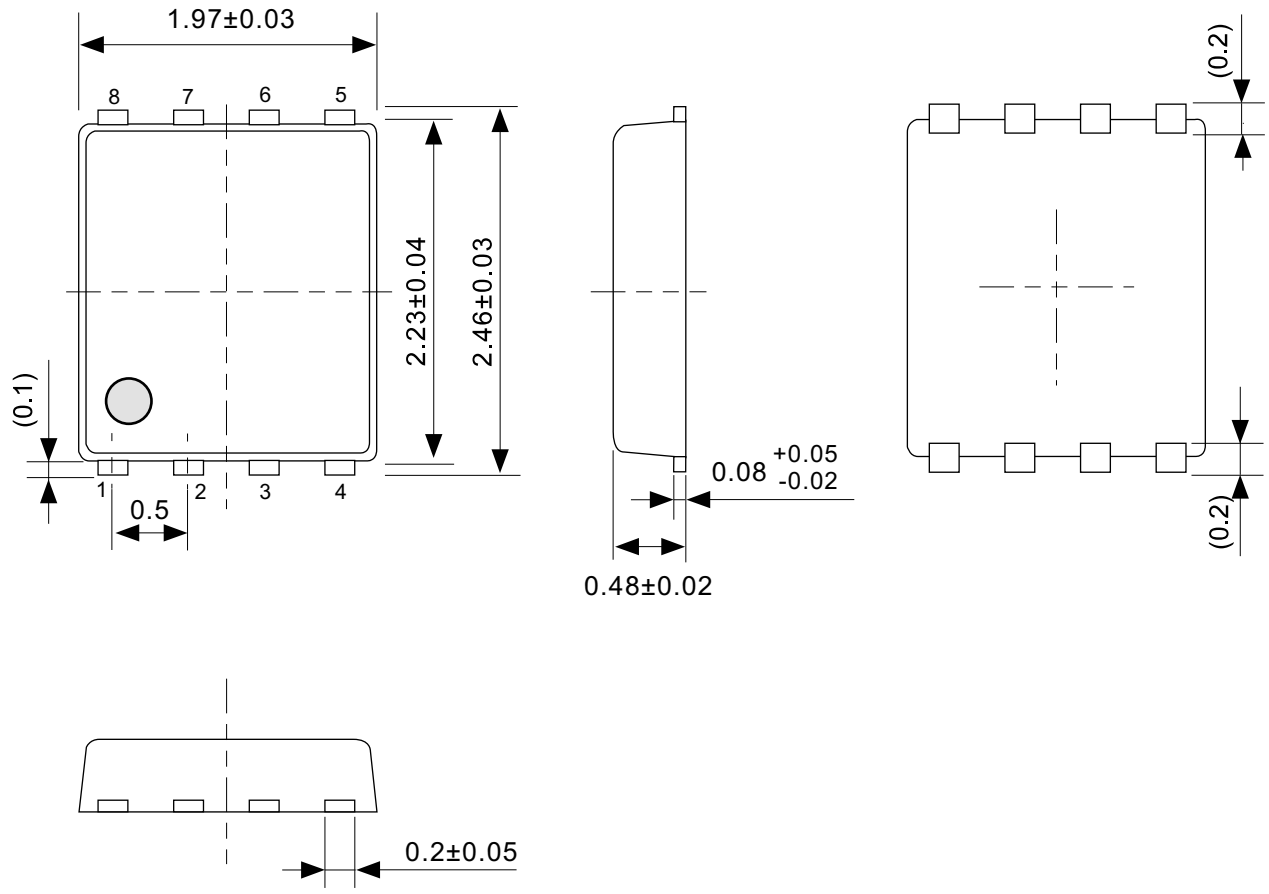

No. PH008-A-P-SD-2.1

TITLE	SNT-8A-A-PKG Dimensions
No.	PH008-A-P-SD-2.1
ANGLE	
UNIT	mm
ABLIC Inc.	

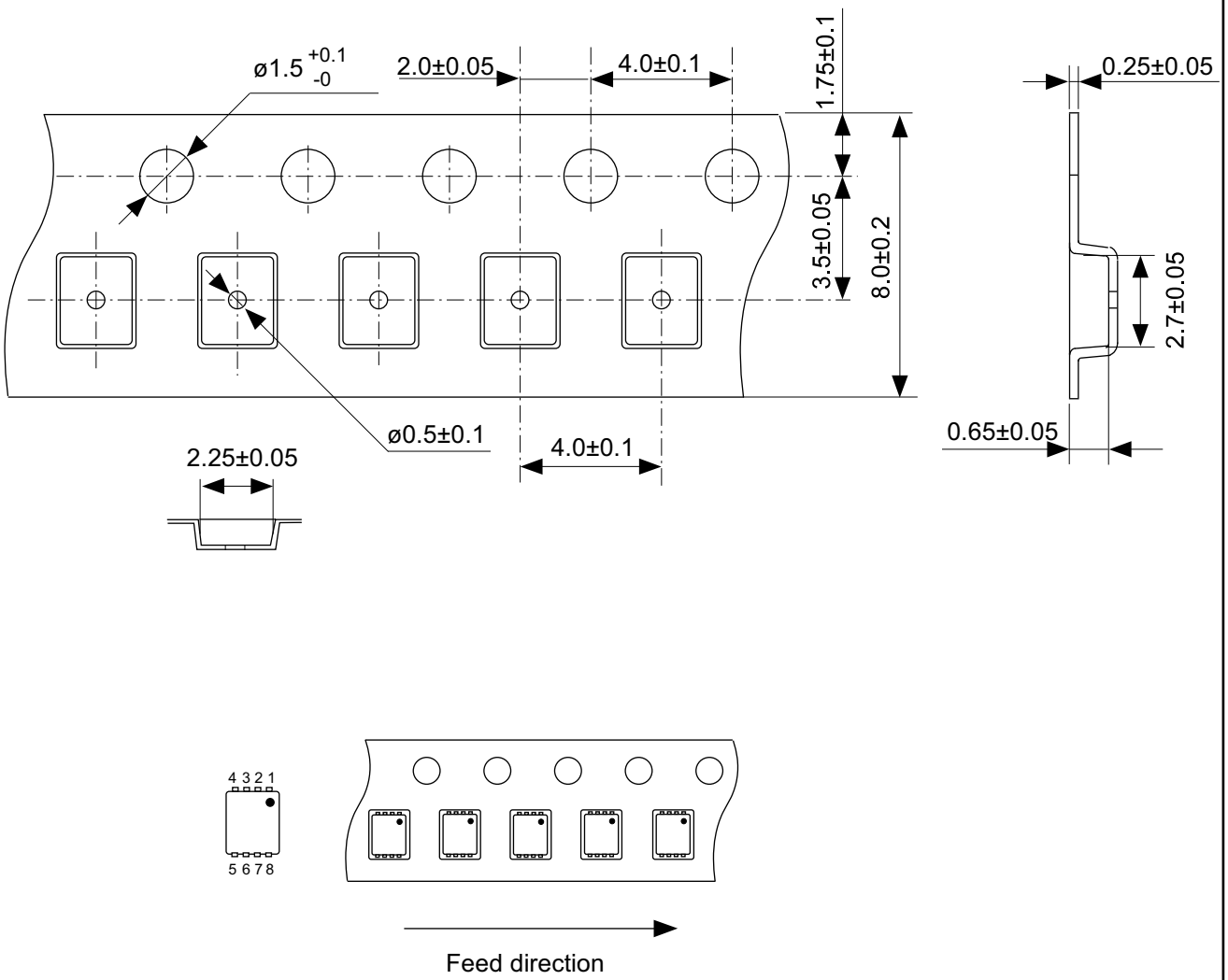

No. PH008-A-C-SD-2.0

TITLE	SNT-8A-A-Carrier Tape
No.	PH008-A-C-SD-2.0
ANGLE	
UNIT	mm
ABLIC Inc.	

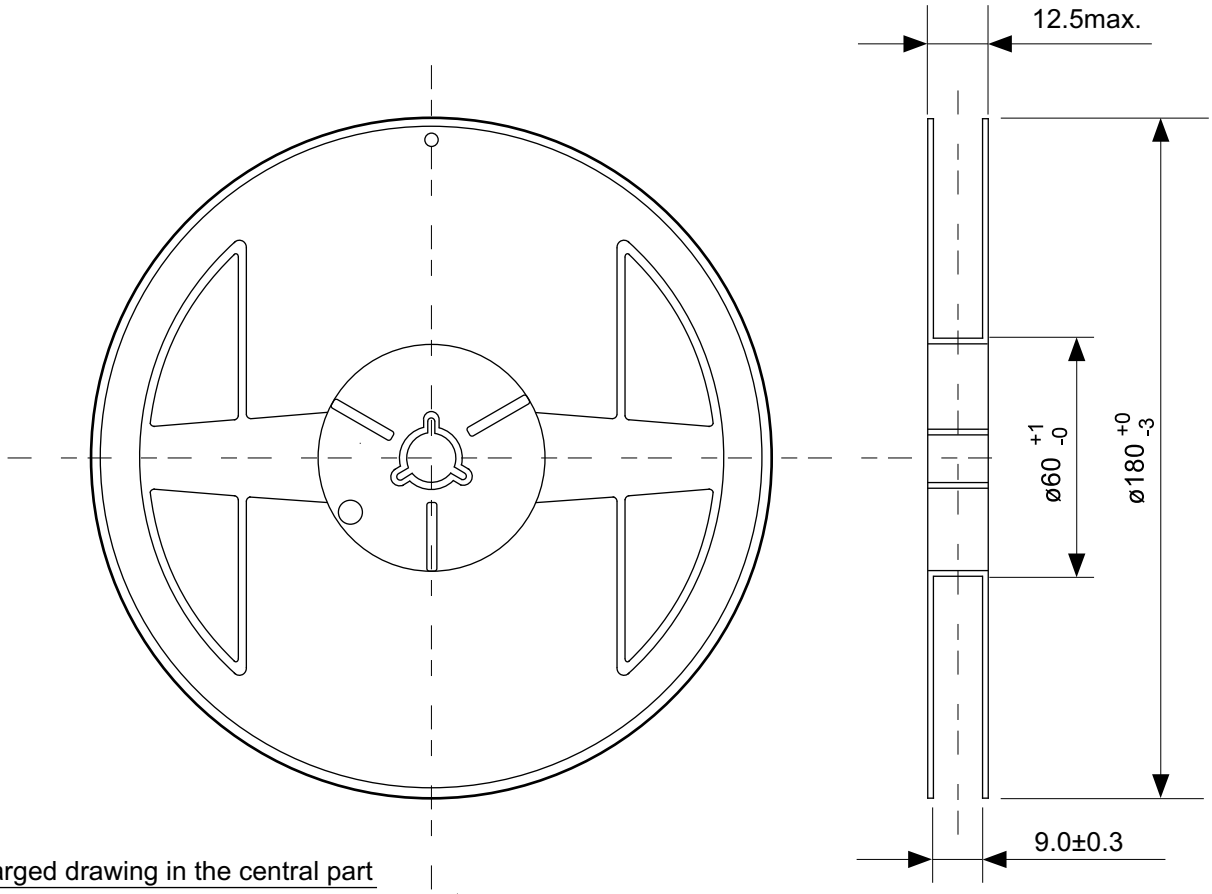

Enlarged drawing in the central part

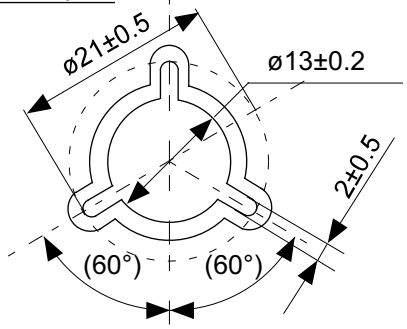

No. PH008-A-R-SD-1.0

TITLE	SNT-8A-A-Reel		
No.	PH008-A-R-SD-1.0		
ANGLE		QTY.	5,000
UNIT	mm		
ABLIC Inc.			

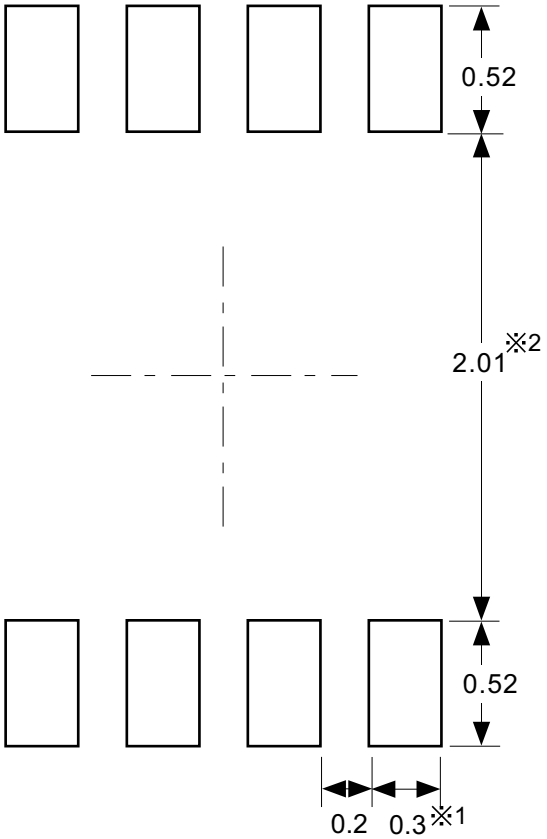

※1. ランドパターンの幅に注意してください (0.25 mm min. / 0.30 mm typ.)。
※2. パッケージ中央にランドパターンを広げないでください (1.96 mm ~ 2.06 mm)。

注意 1. パッケージのモールド樹脂下にシルク印刷やハンダ印刷などしないでください。
2. パッケージ下の配線上のソルダーレジストなどの厚みをランドパターン表面から0.03 mm 以下にしてください。
3. マスク開口サイズと開口位置はランドパターンと合わせてください。
4. 詳細は〝SNTパッケージ活用の手引き〟を参照してください。

※1. Pay attention to the land pattern width (0.25 mm min. / 0.30 mm typ.).
※2. Do not widen the land pattern to the center of the package (1.96 mm to 2.06mm).

Caution 1. Do not do silkscreen printing and solder printing under the mold resin of the package.
2. The thickness of the solder resist on the wire pattern under the package should be 0.03 mm or less from the land pattern surface.
3. Match the mask aperture size and aperture position with the land pattern.
4. Refer to "SNT Package User's Guide" for details.

※1. 请注意焊盘模式的宽度 (0.25 mm min. / 0.30 mm typ.)。
※2. 请勿向封装中间扩展焊盘模式 (1.96 mm ~ 2.06 mm)。

注意 1. 请勿在树脂型封装的下面印刷丝网、焊锡。
2. 在封装下、布线上的阻焊膜厚度 (从焊盘模式表面起) 请控制在 0.03 mm 以下。
3. 钢网的开口尺寸和开口位置请与焊盘模式对齐。
4. 详细内容请参阅 "SNT 封装的应用指南"。

No. PH008-A-L-SD-4.1

TITLE	SNT-8A-A -Land Recommendation
No.	PH008-A-L-SD-4.1
ANGLE	
UNIT	mm
ABLIC Inc.	

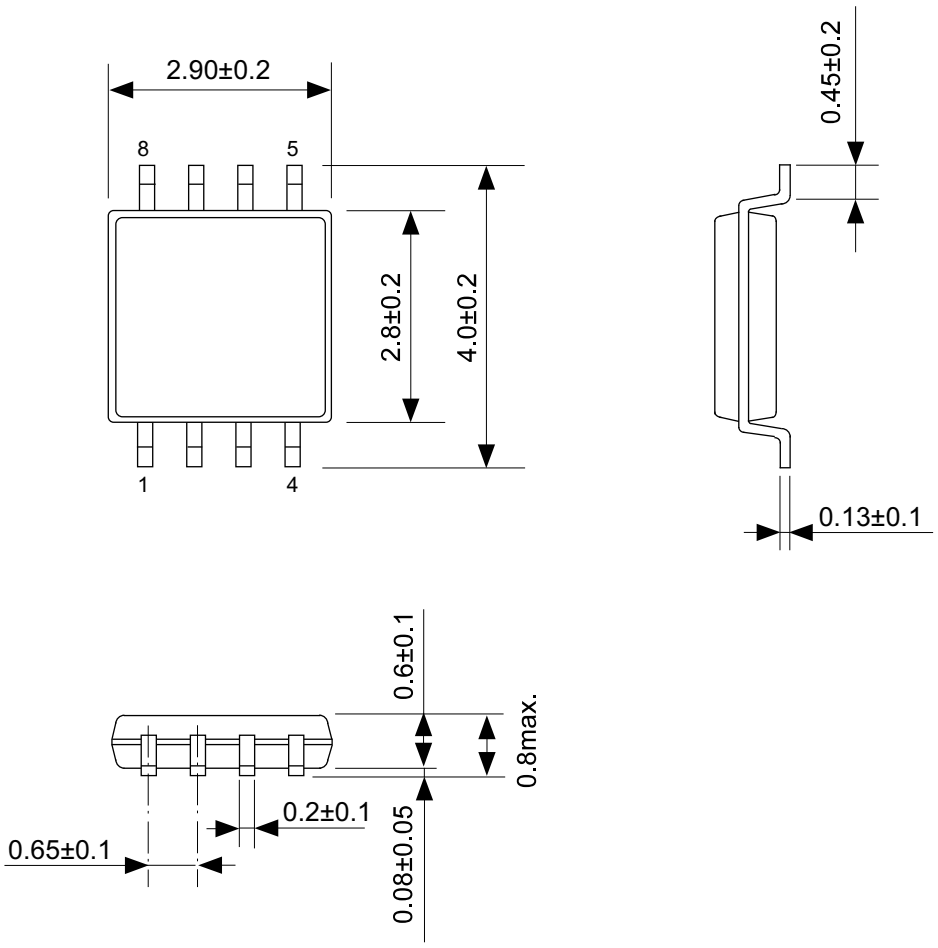

No. FM008-A-P-SD-1.2

TITLE	TMSOP8-A-PKG Dimensions
No.	FM008-A-P-SD-1.2
ANGLE	
UNIT	mm
ABLIC Inc.	

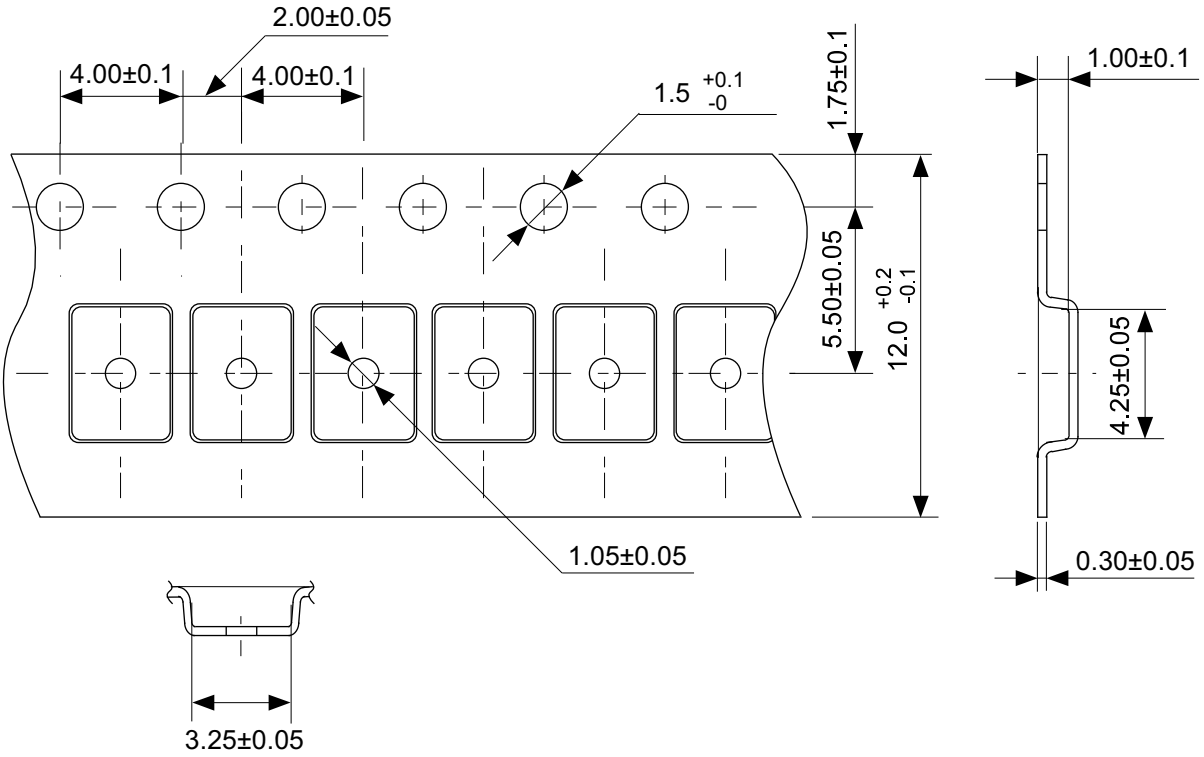

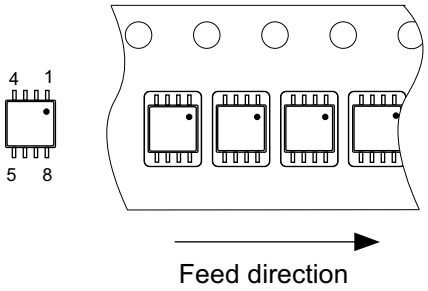

No. FM008-A-C-SD-2.0

TITLE	TMSOP8-A-Carrier Tape
No.	FM008-A-C-SD-2.0
ANGLE	
UNIT	mm
ABLIC Inc.	

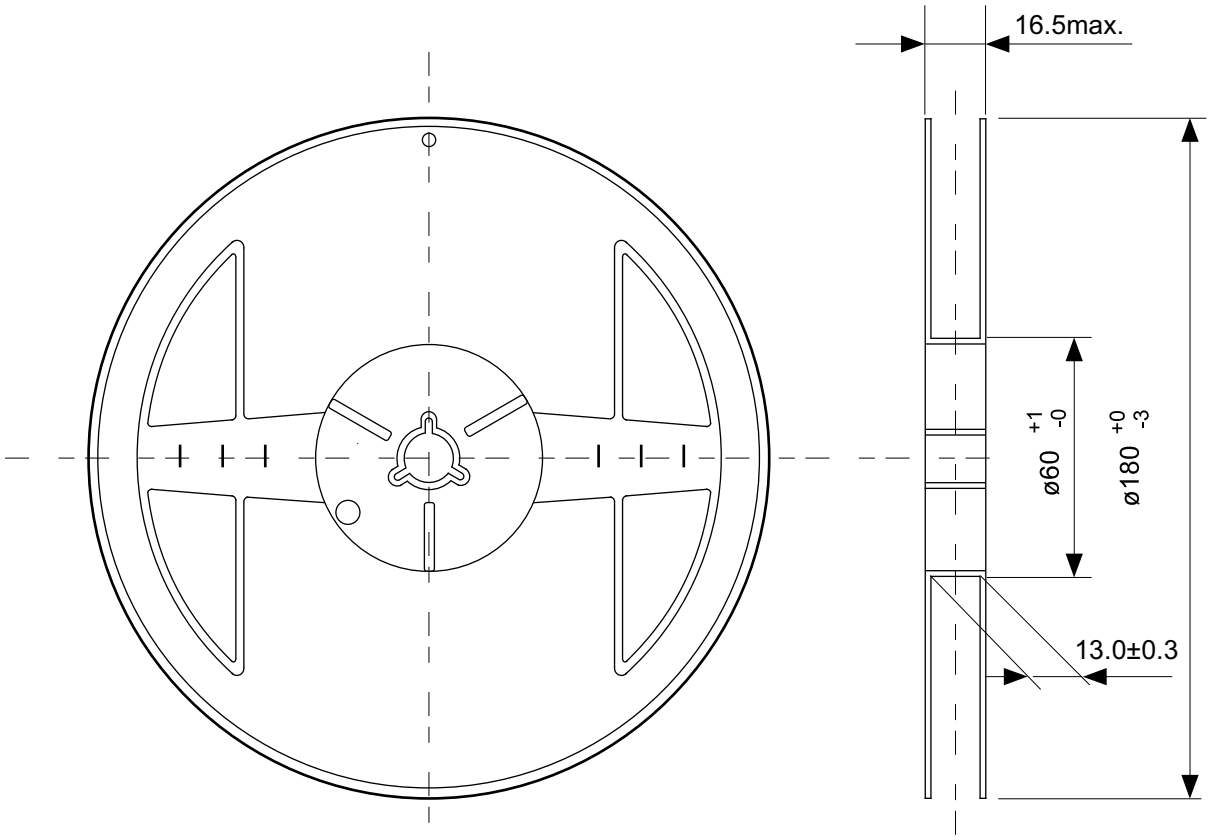

Enlarged drawing in the central part

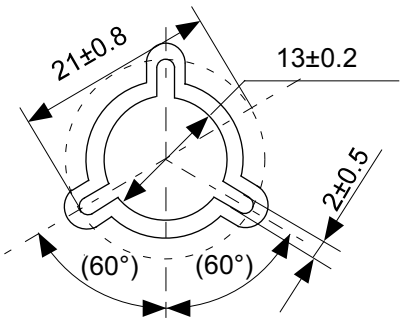

No. FM008-A-R-SD-1.0

TITLE	TMSOP8-A-Reel		
No.	FM008-A-R-SD-1.0		
ANGLE		QTY.	4,000
UNIT	mm		
ABLIC Inc.			

Disclaimers (Handling Precautions)

1. All the information described herein (product data, specifications, figures, tables, programs, algorithms and application circuit examples, etc.) is current as of publishing date of this document and is subject to change without notice.
2. The circuit examples and the usages described herein are for reference only, and do not guarantee the success of any specific mass-production design.
   ABLIC Inc. is not liable for any losses, damages, claims or demands caused by the reasons other than the products described herein (hereinafter "the products") or infringement of third-party intellectual property right and any other right due to the use of the information described herein.
3. ABLIC Inc. is not liable for any losses, damages, claims or demands caused by the incorrect information described herein.
4. Be careful to use the products within their ranges described herein. Pay special attention for use to the absolute maximum ratings, operation voltage range and electrical characteristics, etc.
   ABLIC Inc. is not liable for any losses, damages, claims or demands caused by failures and / or accidents, etc. due to the use of the products outside their specified ranges.
5. Before using the products, confirm their applications, and the laws and regulations of the region or country where they are used and verify suitability, safety and other factors for the intended use.
6. When exporting the products, comply with the Foreign Exchange and Foreign Trade Act and all other export-related laws, and follow the required procedures.
7. The products are strictly prohibited from using, providing or exporting for the purposes of the development of weapons of mass destruction or military use. ABLIC Inc. is not liable for any losses, damages, claims or demands caused by any provision or export to the person or entity who intends to develop, manufacture, use or store nuclear, biological or chemical weapons or missiles, or use any other military purposes.
8. The products are not designed to be used as part of any device or equipment that may affect the human body, human life, or assets (such as medical equipment, disaster prevention systems, security systems, combustion control systems, infrastructure control systems, vehicle equipment, traffic systems, in-vehicle equipment, aviation equipment, aerospace equipment, and nuclear-related equipment), excluding when specified for in-vehicle use or other uses by ABLIC, Inc. Do not apply the products to the above listed devices and equipments.
   ABLIC Inc. is not liable for any losses, damages, claims or demands caused by unauthorized or unspecified use of the products.
9. In general, semiconductor products may fail or malfunction with some probability. The user of the products should therefore take responsibility to give thorough consideration to safety design including redundancy, fire spread prevention measures, and malfunction prevention to prevent accidents causing injury or death, fires and social damage, etc. that may ensue from the products' failure or malfunction.
   The entire system in which the products are used must be sufficiently evaluated and judged whether the products are allowed to apply for the system on customer's own responsibility.
10. The products are not designed to be radiation-proof. The necessary radiation measures should be taken in the product design by the customer depending on the intended use.
11. The products do not affect human health under normal use. However, they contain chemical substances and heavy metals and should therefore not be put in the mouth. The fracture surfaces of wafers and chips may be sharp. Be careful when handling these with the bare hands to prevent injuries, etc.
12. When disposing of the products, comply with the laws and ordinances of the country or region where they are used.
13. The information described herein contains copyright information and know-how of ABLIC Inc. The information described herein does not convey any license under any intellectual property rights or any other rights belonging to ABLIC Inc. or a third party. Reproduction or copying of the information from this document or any part of this document described herein for the purpose of disclosing it to a third-party is strictly prohibited without the express permission of ABLIC Inc.
14. For more details on the information described herein or any other questions, please contact ABLIC Inc.'s sales representative.
15. This Disclaimers have been delivered in a text using the Japanese language, which text, despite any translations into the English language and the Chinese language, shall be controlling.

2.4-2019.07

ENTEGRECİ

Bu belge www.entegreci.com üzerinden sunulmaktadır.

Elektronik komponent tedarikinde Entegreci

Entegreci, Eskişehir merkezli, Türkiye geneline satış yapan bir elektronik komponent mağazasıdır. Entegreler (IC), mikrodenetleyiciler, transistörler, diyotlar, pasif elemanlar, konnektörler, modüller ve geliştirme kartları tek adetten seri üretim adetlerine kadar satılır. Ürün sayfalarında güncel stok durumunu, fiyatı ve datasheet bağlantısını bulabilirsiniz.

Parça koduyla arama

Üretici parça numarasını yazın; stok ve fiyatı hemen görün.

www.entegreci.com

Ürün kategorileri

Entegreden kapasitöre tüm elektronik komponent kategorileri.

Kategorilere göz atın

Üreticiler

Aradığınız üreticinin ürünlerini tek sayfada inceleyin.

Üreticileri görün

Toplu alım ve teklif

Listede olmayan ya da yüksek adetli parçalar için teklif isteyin.

Teklif isteyin

www.entegreci.com | **destek@entegreci.com** | **0850 305 90 34**

Entegreci is an online electronic components store based in Türkiye. Search by manufacturer part number to see stock, prices and datasheets for integrated circuits, microcontrollers, transistors, passive components and connectors, or request a quote for parts that are not listed.

Bu sayfa Entegreci tarafından eklenmiştir. Belgenin önceki sayfaları asıl yayıncısına aittir ve içeriği değiştirilmemiştir; en güncel sürüm için belgenin yayıncısına başvurun.