www.ablic.com

BATTERY PROTECTION IC FOR 1-CELL PACK

© ABLIC Inc., 2015-2024

The S-8240A Series is a protection IC for lithium-ion / lithium polymer rechargeable batteries and includes high-accuracy voltage detection circuits and delay circuits.
The S-8240A Series is suitable for protecting 1-cell lithium-ion / lithium polymer rechargeable battery packs from overcharge, overdischarge, and overcurrent.

■ Features

- High-accuracy voltage detection circuit

Overcharge detection voltage	3.500 V to 4.600 V (5 mV step)	Accuracy ±20 mV
Overcharge release voltage	3.100 V to 4.600 V*1	Accuracy ±50 mV
Overdischarge detection voltage	2.000 V to 3.400 V (10 mV step)	Accuracy ±50 mV
Overdischarge release voltage	2.000 V to 3.400 V*2	Accuracy ±100 mV
Discharge overcurrent detection voltage	0.015 V to 0.200 V (5 mV step)	Accuracy ±5 mV
Load short-circuiting detection voltage	0.065 V to 0.500 V (25 mV step)*3	Accuracy ±40 mV
Charge overcurrent detection voltage	–0.200 V to –0.015 V (5 mV step)	Accuracy ±5 mV

- Detection delay times are generated only by an internal circuit (external capacitors are unnecessary).
- 0 V battery charge: Enabled, inhibited
- Power-down function: Available, unavailable
- Release condition of discharge overcurrent status: Load disconnection, charger connection
- Release voltage of discharge overcurrent status: V_{RIOV}, V_{DIOV}
- High-withstand voltage: VM pin and CO pin: Absolute maximum rating 28 V
- Wide operation temperature range: Ta = –40°C to +85°C
- Low current consumption
  - During operation: 1.5 µA typ., 3.0 µA max. (Ta = +25°C)
  - During power-down: 50 nA max. (Ta = +25°C)
  - During overdischarge: 500 nA max. (Ta = +25°C)
- Lead-free (Sn 100%), halogen-free

***1.** Overcharge release voltage = Overcharge detection voltage – Overcharge hysteresis voltage
(Overcharge hysteresis voltage can be selected from a range of 0 V to 0.4 V in 50 mV step.)
***2.** Overdischarge release voltage = Overdischarge detection voltage + Overdischarge hysteresis voltage
(Overdischarge hysteresis voltage can be selected from a range of 0 V to 0.7 V in 100 mV step.)
***3.** Load short-circuiting detection voltage = Discharge overcurrent detection voltage + 0.025 × n
(n can be selected from any integer value greater or equal to 2)

■ Applications

- Lithium-ion rechargeable battery pack
- Lithium polymer rechargeable battery pack

■ Packages

- SOT-23-6
- SNT-6A
- HSNT-6(1212)

■ Block Diagram

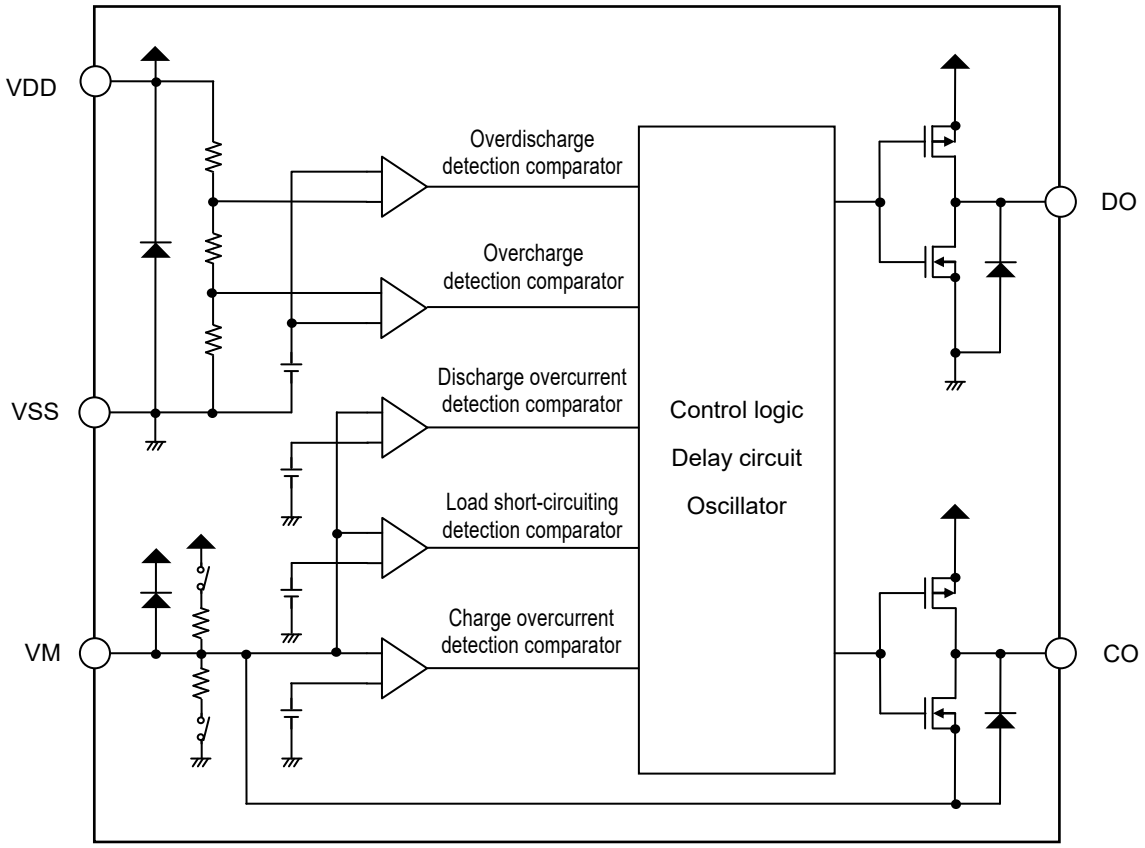

Figure 1

■ Product Name Structure

1. Product name

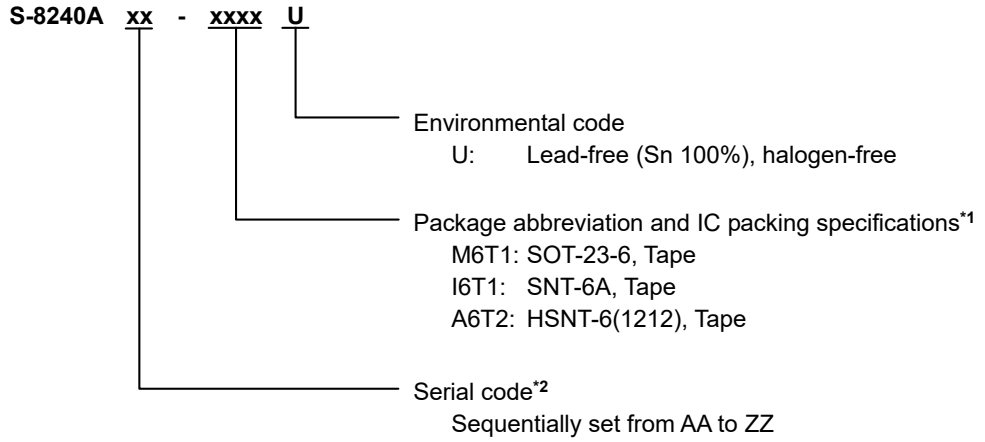

***1.** Refer to the tape drawing.
***2.** Refer to "**3. Product name list**".

2. Packages

Table 1 Package Drawing Codes

Package Name	Dimension	Tape	Reel	Land
SOT-23-6	MP006-A-P-SD	MP006-A-C-SD	MP006-A-R-SD	–
SNT-6A	PG006-A-P-SD	PG006-A-C-SD	PG006-A-R-SD	PG006-A-L-SD
HSNT-6(1212)	PM006-A-P-SD	PM006-A-C-SD	PM006-A-R-SD	PM006-A-L-SD

3. Product name list

3. 1 SOT-23-6

Table 2 (1 / 2)

Product Name	Overcharge Detection Voltage [V_{CU}]	Overcharge Release Voltage [V_{CL}]	Overdischarge Detection Voltage [V_{DL}]	Overdischarge Release Voltage [V_{DU}]	Discharge Overcurrent Detection Voltage [V_{DIOV}]	Load Short-circuiting Detection Voltage [V_{SHORT}]	Charge Overcurrent Detection Voltage [V_{CIOV}]
S-8240ACS-M6T1U	4.425 V	4.225 V	2.500 V	2.800 V	0.200 V	0.500 V	−0.150 V
S-8240ACT-M6T1U	4.425 V	4.225 V	2.500 V	2.900 V	0.200 V	0.500 V	−0.200 V
S-8240ADQ-M6T1U	4.280 V	4.080 V	2.800 V	3.200 V	0.050 V	0.300 V	−0.050 V
S-8240ADZ-M6T1U	4.150 V	3.950 V	2.500 V	2.900 V	0.100 V	0.500 V	−0.100 V
S-8240AEA-M6T1U	4.250 V	4.050 V	2.500 V	2.900 V	0.100 V	0.500 V	−0.100 V
S-8240AEH-M6T1U	4.175 V	4.025 V	2.500 V	2.800 V	0.120 V	0.495 V	−0.120 V
S-8240AGJ-M6T1U	4.350 V	4.000 V	2.400 V	3.000 V	0.200 V	0.500 V	−0.100 V

Table 2 (2 / 2)

Product Name	Delay Time Combination*1	0 V Battery Charge	Power-down Function	Release Condition of Discharge Overcurrent Status	Release Voltage of Discharge Overcurrent Status
S-8240ACS-M6T1U	(7)	Enabled	Unavailable	Load disconnection	V_{DIOV}
S-8240ACT-M6T1U	(3)	Enabled	Unavailable	Load disconnection	V_{DIOV}
S-8240ADQ-M6T1U	(4)	Inhibited	Available	Load disconnection	V_{RIOV}
S-8240ADZ-M6T1U	(16)	Enabled	Unavailable	Load disconnection	V_{RIOV}
S-8240AEA-M6T1U	(17)	Enabled	Unavailable	Load disconnection	V_{RIOV}
S-8240AEH-M6T1U	(4)	Inhibited	Available	Load disconnection	V_{RIOV}
S-8240AGJ-M6T1U	(23)	Enabled	Available	Load disconnection	V_{DIOV}

***1.** Refer to **Table 5** about the details of the delay time combinations.

Remark Please contact our sales representatives for products other than the above.

3. 2 SNT-6A

Table 3 (1 / 6)

Product Name	Overcharge Detection Voltage [V_{CU}]	Overcharge Release Voltage [V_{CL}]	Overdischarge Detection Voltage [V_{DL}]	Overdischarge Release Voltage [V_{DU}]	Discharge Overcurrent Detection Voltage [V_{DIOV}]	Load Short-circuiting Detection Voltage [V_{SHORT}]	Charge Overcurrent Detection Voltage [V_{CIOV}]
S-8240AAB-I6T1U	4.475 V	4.275 V	2.500 V	2.900 V	0.065 V	0.190 V	−0.050 V
S-8240AAC-I6T1U	4.420 V	4.220 V	2.500 V	2.900 V	0.050 V	0.300 V	−0.040 V
S-8240AAD-I6T1U	4.420 V	4.220 V	2.500 V	2.900 V	0.050 V	0.300 V	−0.040 V
S-8240AAE-I6T1U	4.425 V	4.225 V	2.500 V	2.900 V	0.100 V	0.500 V	−0.100 V
S-8240AAF-I6T1U	4.425 V	4.225 V	2.500 V	2.800 V	0.055 V	0.255 V	−0.055 V
S-8240AAG-I6T1U	4.425 V	4.225 V	2.500 V	2.900 V	0.100 V	0.300 V	−0.060 V
S-8240AAH-I6T1U	4.425 V	4.225 V	2.500 V	2.500 V	0.180 V	0.505 V	−0.125 V
S-8240AAI-I6T1U	4.400 V	4.200 V	2.400 V	2.800 V	0.180 V	0.505 V	−0.140 V
S-8240AAJ-I6T1U	4.425 V	4.225 V	2.500 V	2.800 V	0.025 V	0.075 V	−0.025 V
S-8240AAK-I6T1U	4.475 V	4.275 V	2.500 V	2.800 V	0.025 V	0.075 V	−0.025 V
S-8240AAL-I6T1U	4.475 V	4.275 V	2.500 V	2.900 V	0.045 V	0.095 V	−0.040 V
S-8240AAM-I6T1U	4.475 V	4.275 V	2.500 V	2.900 V	0.130 V	0.305 V	−0.100 V
S-8240AAN-I6T1U	4.280 V	4.280 V	2.800 V	2.800 V	0.050 V	0.500 V	−0.100 V
S-8240AAQ-I6T1U	4.475 V	4.275 V	2.500 V	2.900 V	0.130 V	0.380 V	−0.125 V
S-8240AAR-I6T1U	4.475 V	4.275 V	2.500 V	2.900 V	0.130 V	0.380 V	−0.125 V
S-8240AAS-I6T1U	4.425 V	4.225 V	3.000 V	3.000 V	0.030 V	0.205 V	−0.030 V
S-8240AAT-I6T1U	4.280 V	4.080 V	3.000 V	3.000 V	0.030 V	0.205 V	−0.030 V
S-8240AAU-I6T1U	4.475 V	4.275 V	2.500 V	2.800 V	0.060 V	0.160 V	−0.050 V
S-8240AAV-I6T1U	4.475 V	4.275 V	2.500 V	2.500 V	0.030 V	0.105 V	−0.030 V
S-8240AAW-I6T1U	4.475 V	4.275 V	2.500 V	2.800 V	0.030 V	0.105 V	−0.030 V
S-8240AAX-I6T1U	4.550 V	4.250 V	2.000 V	2.300 V	0.130 V	0.380 V	−0.125 V
S-8240AAY-I6T1U	4.425 V	4.225 V	2.500 V	2.900 V	0.080 V	0.230 V	−0.080 V
S-8240AAZ-I6T1U	4.425 V	4.225 V	2.500 V	2.900 V	0.045 V	0.095 V	−0.045 V
S-8240ABA-I6T1U	4.425 V	4.225 V	2.500 V	2.900 V	0.130 V	0.380 V	−0.130 V
S-8240ABB-I6T1U	4.520 V	4.320 V	2.500 V	2.900 V	0.160 V	0.510 V	−0.160 V
S-8240ABC-I6T1U	4.520 V	4.320 V	2.500 V	2.900 V	0.130 V	0.480 V	−0.130 V
S-8240ABD-I6T1U	4.475 V	4.275 V	2.500 V	2.900 V	0.150 V	0.400 V	−0.150 V
S-8240ABE-I6T1U	4.475 V	4.275 V	2.500 V	2.800 V	0.055 V	0.255 V	−0.055 V
S-8240ABF-I6T1U	4.200 V	4.050 V	2.500 V	2.800 V	0.100 V	0.200 V	−0.050 V
S-8240ABG-I6T1U	4.475 V	4.275 V	2.500 V	2.900 V	0.160 V	0.360 V	−0.125 V
S-8240ABH-I6T1U	4.425 V	4.225 V	2.500 V	2.900 V	0.160 V	0.360 V	−0.125 V
S-8240ABI-I6T1U	4.475 V	4.275 V	2.800 V	3.000 V	0.130 V	0.380 V	−0.130 V
S-8240ABJ-I6T1U	4.425 V	4.225 V	2.800 V	3.000 V	0.130 V	0.380 V	−0.130 V
S-8240ABK-I6T1U	4.475 V	4.275 V	2.400 V	2.800 V	0.150 V	0.350 V	−0.125 V
S-8240ABL-I6T1U	4.550 V	4.250 V	2.000 V	2.400 V	0.075 V	0.250 V	−0.055 V
S-8240ABM-I6T1U	4.475 V	4.275 V	2.500 V	2.900 V	0.080 V	0.280 V	−0.080 V
S-8240ABN-I6T1U	4.475 V	4.275 V	2.500 V	2.900 V	0.100 V	0.300 V	−0.100 V
S-8240ABO-I6T1U	4.425 V	4.225 V	3.300 V	3.300 V	0.050 V	0.250 V	−0.050 V
S-8240ABQ-I6T1U	4.450 V	4.250 V	2.500 V	2.600 V	0.135 V	0.260 V	−0.115 V
S-8240ABR-I6T1U	4.500 V	4.350 V	2.400 V	2.500 V	0.110 V	0.235 V	−0.105 V
S-8240ABU-I6T1U	4.475 V	4.275 V	2.500 V	2.900 V	0.055 V	0.255 V	−0.045 V
S-8240ABV-I6T1U	4.425 V	4.225 V	2.500 V	2.900 V	0.055 V	0.255 V	−0.045 V

Table 3 (2 / 6)

Product Name	Overcharge Detection Voltage [V_{CU}]	Overcharge Release Voltage [V_{CL}]	Overdischarge Detection Voltage [V_{DL}]	Overdischarge Release Voltage [V_{DU}]	Discharge Overcurrent Detection Voltage [V_{DIOV}]	Load Short-circuiting Detection Voltage [V_{SHORT}]	Charge Overcurrent Detection Voltage [V_{CIOV}]
S-8240ABW-I6T1U	4.475 V	4.275 V	2.500 V	2.900 V	0.075 V	0.300 V	−0.060 V
S-8240ABX-I6T1U	4.425 V	4.225 V	2.500 V	2.900 V	0.075 V	0.300 V	−0.060 V
S-8240ACB-I6T1U	4.475 V	4.275 V	2.500 V	2.800 V	0.034 V	0.109 V	−0.030 V
S-8240ACC-I6T1U	4.475 V	4.275 V	2.400 V	2.800 V	0.075 V	0.250 V	−0.075 V
S-8240ACE-I6T1U	4.350 V	4.200 V	2.400 V	2.500 V	0.195 V	0.245 V	−0.150 V
S-8240ACF-I6T1U	4.510 V	4.310 V	2.500 V	2.800 V	0.055 V	0.205 V	−0.055 V
S-8240ACG-I6T1U	4.500 V	4.300 V	2.500 V	2.900 V	0.100 V	0.300 V	−0.080 V
S-8240ACH-I6T1U	4.500 V	4.300 V	2.500 V	2.900 V	0.130 V	0.380 V	−0.100 V
S-8240ACI-I6T1U	4.475 V	4.275 V	2.500 V	2.900 V	0.045 V	0.145 V	−0.045 V
S-8240ACJ-I6T1U	4.325 V	4.075 V	2.500 V	2.900 V	0.050 V	0.200 V	−0.030 V
S-8240ACK-I6T1U	4.250 V	4.000 V	2.500 V	3.000 V	0.150 V	0.500 V	−0.150 V
S-8240ACL-I6T1U	3.800 V	3.700 V	2.200 V	2.300 V	0.100 V	0.200 V	−0.100 V
S-8240ACN-I6T1U	4.475 V	4.275 V	2.500 V	2.900 V	0.045 V	0.120 V	−0.040 V
S-8240ACO-I6T1U	4.475 V	4.275 V	2.800 V	3.000 V	0.030 V	0.205 V	−0.045 V
S-8240ACP-I6T1U	3.650 V	3.450 V	2.100 V	2.300 V	0.150 V	0.500 V	−0.020 V
S-8240ACR-I6T1U	4.500 V	4.350 V	2.300 V	2.700 V	0.185 V	0.235 V	−0.150 V
S-8240ACU-I6T1U	4.475 V	4.275 V	2.500 V	2.900 V	0.055 V	0.155 V	−0.050 V
S-8240ACV-I6T1U	4.425 V	4.225 V	2.800 V	2.800 V	0.050 V	0.150 V	−0.050 V
S-8240ACW-I6T1U	4.280 V	4.080 V	2.800 V	2.800 V	0.050 V	0.150 V	−0.050 V
S-8240ACY-I6T1U	4.500 V	4.350 V	2.000 V	2.100 V	0.185 V	0.235 V	−0.150 V
S-8240ADB-I6T1U	4.280 V	4.180 V	2.300 V	2.300 V	0.180 V	0.480 V	−0.175 V
S-8240ADC-I6T1U	3.800 V	3.600 V	2.200 V	2.400 V	0.150 V	0.500 V	−0.150 V
S-8240ADF-I6T1U	4.500 V	4.350 V	2.400 V	2.500 V	0.195 V	0.245 V	−0.150 V
S-8240ADG-I6T1U	4.475 V	4.275 V	2.400 V	2.800 V	0.075 V	0.250 V	−0.075 V
S-8240ADH-I6T1U	4.280 V	3.880 V	2.500 V	3.000 V	0.180 V	0.480 V	−0.180 V
S-8240ADJ-I6T1U	4.100 V	3.850 V	2.500 V	2.900 V	0.150 V	0.500 V	−0.150 V
S-8240ADK-I6T1U	4.450 V	4.250 V	2.650 V	2.850 V	0.135 V	0.260 V	−0.115 V
S-8240ADM-I6T1U	4.350 V	4.200 V	2.400 V	2.500 V	0.095 V	0.245 V	−0.150 V
S-8240ADO-I6T1U	4.375 V	4.175 V	2.400 V	2.800 V	0.100 V	0.500 V	−0.100 V
S-8240ADS-I6T1U	4.425 V	4.225 V	2.500 V	2.900 V	0.050 V	0.100 V	−0.050 V
S-8240ADU-I6T1U	4.275 V	4.075 V	2.300 V	2.300 V	0.120 V	0.345 V	−0.400 V
S-8240ADV-I6T1U	4.275 V	4.075 V	2.300 V	2.300 V	0.220 V	0.495 V	−0.400 V
S-8240ADW-I6T1U	4.550 V	4.350 V	2.500 V	2.900 V	0.075 V	0.300 V	−0.060 V
S-8240ADX-I6T1U	4.550 V	4.350 V	2.600 V	3.000 V	0.045 V	0.095 V	−0.040 V
S-8240ADZ-I6T1U	4.150 V	3.950 V	2.500 V	2.900 V	0.100 V	0.500 V	−0.100 V
S-8240AEA-I6T1U	4.250 V	4.050 V	2.500 V	2.900 V	0.100 V	0.500 V	−0.100 V
S-8240AEC-I6T1U	4.475 V	4.275 V	2.400 V	2.800 V	0.150 V	0.500 V	−0.125 V
S-8240AED-I6T1U	4.350 V	4.150 V	2.500 V	2.800 V	0.100 V	0.500 V	−0.050 V
S-8240AEE-I6T1U	4.280 V	4.080 V	2.600 V	2.700 V	0.075 V	0.200 V	−0.050 V
S-8240AEF-I6T1U	4.500 V	4.300 V	2.500 V	2.900 V	0.045 V	0.095 V	−0.040 V
S-8240AEG-I6T1U	4.225 V	4.025 V	2.800 V	2.800 V	0.050 V	0.150 V	−0.050 V
S-8240AEI-I6T1U	4.250 V	4.050 V	2.400 V	2.900 V	0.070 V	0.395 V	−0.070 V
S-8240AEJ-I6T1U	4.300 V	4.100 V	2.300 V	2.800 V	0.085 V	0.485 V	−0.085 V

Table 3 (3 / 6)

Product Name	Overcharge Detection Voltage [V_{CU}]	Overcharge Release Voltage [V_{CL}]	Overdischarge Detection Voltage [V_{DL}]	Overdischarge Release Voltage [V_{DU}]	Discharge Overcurrent Detection Voltage [V_{DIOV}]	Load Short-circuiting Detection Voltage [V_{SHORT}]	Charge Overcurrent Detection Voltage [V_{CIOV}]
S-8240AEM-I6T1U	4.475 V	4.275 V	2.500 V	2.800 V	0.060 V	0.185 V	−0.060 V
S-8240AEN-I6T1U	4.475 V	4.275 V	2.500 V	2.800 V	0.060 V	0.210 V	−0.060 V
S-8240AEO-I6T1U	4.475 V	4.275 V	2.700 V	3.000 V	0.045 V	0.145 V	−0.045 V
S-8240AEP-I6T1U	4.375 V	4.175 V	2.800 V	2.800 V	0.050 V	0.150 V	−0.050 V
S-8240AEQ-I6T1U	4.350 V	4.200 V	2.000 V	2.200 V	0.195 V	0.245 V	−0.150 V
S-8240AER-I6T1U	4.495 V	4.295 V	2.500 V	2.700 V	0.045 V	0.145 V	−0.045 V
S-8240AET-I6T1U	4.550 V	4.350 V	2.500 V	2.900 V	0.060 V	0.135 V	−0.030 V
S-8240AEU-I6T1U	4.475 V	4.275 V	2.500 V	2.800 V	0.060 V	0.185 V	−0.060 V
S-8240AEV-I6T1U	4.300 V	4.200 V	2.500 V	2.600 V	0.125 V	0.175 V	−0.080 V
S-8240AEW-I6T1U	4.350 V	4.200 V	2.000 V	2.200 V	0.095 V	0.145 V	−0.070 V
S-8240AEY-I6T1U	4.475 V	4.275 V	2.400 V	2.800 V	0.080 V	0.255 V	−0.075 V
S-8240AEZ-I6T1U	4.520 V	4.320 V	2.500 V	2.700 V	0.050 V	0.200 V	−0.030 V
S-8240AFA-I6T1U	4.560 V	4.360 V	2.400 V	2.600 V	0.100 V	0.300 V	−0.060 V
S-8240AFD-I6T1U	4.495 V	4.295 V	2.500 V	2.700 V	0.060 V	0.185 V	-0.060 V
S-8240AFH-I6T1U	4.500 V	4.300 V	3.000 V	3.200 V	0.050 V	0.100 V	-0.050 V
S-8240AFI-I6T1U	4.550 V	4.350 V	3.000 V	3.200 V	0.050 V	0.100 V	-0.050 V
S-8240AFK-I6T1U	4.280 V	4.130 V	2.500 V	2.700 V	0.090 V	0.490 V	-0.090 V
S-8240AFL-I6T1U	4.280 V	4.080 V	3.000 V	3.000 V	0.080 V	0.205 V	-0.030 V
S-8240AFM-I6T1U	4.275 V	4.175 V	2.800 V	2.900 V	0.100 V	0.500 V	-0.100 V
S-8240AFP-I6T1U	4.275 V	4.175 V	2.800 V	2.900 V	0.100 V	0.500 V	-0.100 V
S-8240AFR-I6T1U	4.545 V	4.345 V	2.500 V	2.700 V	0.060 V	0.185 V	-0.060 V
S-8240AFS-I6T1U	4.240 V	4.040 V	2.700 V	3.100 V	0.050 V	0.100 V	-0.050 V
S-8240AFT-I6T1U	4.290 V	4.090 V	2.600 V	3.000 V	0.075 V	0.250 V	-0.075 V
S-8240AFV-I6T1U	4.425 V	4.225 V	2.800 V	3.000 V	0.045 V	0.145 V	-0.045 V
S-8240AFW-I6T1U	4.495 V	4.295 V	2.500 V	2.700 V	0.060 V	0.235 V	-0.060 V
S-8240AGD-I6T1U	4.280 V	4.080 V	3.000 V	3.000 V	0.080 V	0.205 V	-0.060 V
S-8240AGH-I6T1U	4.280 V	4.080 V	3.100 V	3.100 V	0.030 V	0.205 V	-0.030 V
S-8240AGI-I6T1U	4.375 V	4.175 V	2.550 V	2.850 V	0.120 V	0.195 V	-0.050 V

Table 3 (4 / 6)

Product Name	Delay Time Combination*1	0 V Battery Charge	Power-down Function	Release Condition of Discharge Overcurrent Status	Release Voltage of Discharge Overcurrent Status
S-8240AAB-I6T1U	(1)	Inhibited	Unavailable	Load disconnection	V_{RIOV}
S-8240AAC-I6T1U	(2)	Enabled	Unavailable	Load disconnection	V_{RIOV}
S-8240AAD-I6T1U	(2)	Inhibited	Unavailable	Load disconnection	V_{RIOV}
S-8240AAE-I6T1U	(3)	Enabled	Unavailable	Load disconnection	V_{RIOV}
S-8240AAF-I6T1U	(4)	Enabled	Unavailable	Load disconnection	V_{RIOV}
S-8240AAG-I6T1U	(5)	Inhibited	Unavailable	Load disconnection	V_{RIOV}
S-8240AAH-I6T1U	(3)	Inhibited	Available	Load disconnection	V_{RIOV}
S-8240AAI-I6T1U	(2)	Enabled	Unavailable	Load disconnection	V_{RIOV}
S-8240AAJ-I6T1U	(3)	Inhibited	Unavailable	Load disconnection	V_{RIOV}
S-8240AAK-I6T1U	(3)	Inhibited	Unavailable	Load disconnection	V_{RIOV}
S-8240AAL-I6T1U	(6)	Inhibited	Unavailable	Load disconnection	V_{RIOV}
S-8240AAM-I6T1U	(4)	Inhibited	Unavailable	Load disconnection	V_{RIOV}
S-8240AAN-I6T1U	(7)	Enabled	Available	Load disconnection	V_{RIOV}
S-8240AAQ-I6T1U	(4)	Enabled	Available	Load disconnection	V_{RIOV}
S-8240AAR-I6T1U	(4)	Enabled	Unavailable	Load disconnection	V_{RIOV}
S-8240AAS-I6T1U	(3)	Enabled	Available	Load disconnection	V_{RIOV}
S-8240AAT-I6T1U	(3)	Enabled	Available	Load disconnection	V_{RIOV}
S-8240AAU-I6T1U	(3)	Enabled	Unavailable	Load disconnection	V_{RIOV}
S-8240AAV-I6T1U	(3)	Enabled	Available	Load disconnection	V_{RIOV}
S-8240AAW-I6T1U	(3)	Enabled	Unavailable	Load disconnection	V_{RIOV}
S-8240AAX-I6T1U	(8)	Enabled	Unavailable	Load disconnection	V_{RIOV}
S-8240AAY-I6T1U	(4)	Enabled	Unavailable	Load disconnection	V_{RIOV}
S-8240AAZ-I6T1U	(4)	Enabled	Unavailable	Load disconnection	V_{RIOV}
S-8240ABA-I6T1U	(4)	Enabled	Unavailable	Load disconnection	V_{RIOV}
S-8240ABB-I6T1U	(3)	Enabled	Unavailable	Load disconnection	V_{RIOV}
S-8240ABC-I6T1U	(3)	Inhibited	Unavailable	Load disconnection	V_{RIOV}
S-8240ABD-I6T1U	(4)	Enabled	Unavailable	Load disconnection	V_{RIOV}
S-8240ABE-I6T1U	(4)	Enabled	Unavailable	Load disconnection	V_{RIOV}
S-8240ABF-I6T1U	(3)	Inhibited	Available	Charger connection	V_{DIOV}
S-8240ABG-I6T1U	(4)	Inhibited	Unavailable	Load disconnection	V_{RIOV}
S-8240ABH-I6T1U	(4)	Inhibited	Unavailable	Load disconnection	V_{RIOV}
S-8240ABI-I6T1U	(2)	Enabled	Unavailable	Load disconnection	V_{RIOV}
S-8240ABJ-I6T1U	(2)	Enabled	Unavailable	Load disconnection	V_{RIOV}
S-8240ABK-I6T1U	(4)	Inhibited	Unavailable	Load disconnection	V_{RIOV}
S-8240ABL-I6T1U	(6)	Inhibited	Unavailable	Load disconnection	V_{RIOV}
S-8240ABM-I6T1U	(4)	Enabled	Unavailable	Load disconnection	V_{RIOV}
S-8240ABN-I6T1U	(4)	Enabled	Unavailable	Load disconnection	V_{RIOV}
S-8240ABO-I6T1U	(4)	Enabled	Available	Load disconnection	V_{DIOV}
S-8240ABQ-I6T1U	(6)	Enabled	Available	Load disconnection	V_{RIOV}
S-8240ABR-I6T1U	(6)	Inhibited	Available	Load disconnection	V_{RIOV}
S-8240ABU-I6T1U	(4)	Enabled	Unavailable	Load disconnection	V_{RIOV}
S-8240ABV-I6T1U	(4)	Enabled	Unavailable	Load disconnection	V_{RIOV}

Table 3 (5 / 6)

Product Name	Delay Time Combination*1	0 V Battery Charge	Power-down Function	Release Condition of Discharge Overcurrent Status	Release Voltage of Discharge Overcurrent Status
S-8240ABW-I6T1U	(4)	Enabled	Unavailable	Load disconnection	V_{RIOV}
S-8240ABX-I6T1U	(4)	Enabled	Unavailable	Load disconnection	V_{RIOV}
S-8240ACB-I6T1U	(3)	Enabled	Unavailable	Load disconnection	V_{RIOV}
S-8240ACC-I6T1U	(9)	Inhibited	Unavailable	Charger connection	V_{DIOV}
S-8240ACE-I6T1U	(10)	Inhibited	Available	Load disconnection	V_{RIOV}
S-8240ACF-I6T1U	(9)	Inhibited	Unavailable	Load disconnection	V_{RIOV}
S-8240ACG-I6T1U	(6)	Inhibited	Unavailable	Load disconnection	V_{RIOV}
S-8240ACH-I6T1U	(6)	Inhibited	Unavailable	Load disconnection	V_{RIOV}
S-8240ACI-I6T1U	(11)	Inhibited	Unavailable	Load disconnection	V_{RIOV}
S-8240ACJ-I6T1U	(2)	Inhibited	Available	Load disconnection	V_{DIOV}
S-8240ACK-I6T1U	(4)	Enabled	Available	Load disconnection	V_{DIOV}
S-8240ACL-I6T1U	(4)	Inhibited	Available	Load disconnection	V_{DIOV}
S-8240ACN-I6T1U	(6)	Enabled	Unavailable	Load disconnection	V_{RIOV}
S-8240ACO-I6T1U	(9)	Inhibited	Available	Load disconnection	V_{RIOV}
S-8240ACP-I6T1U	(4)	Enabled	Unavailable	Charger connection	V_{DIOV}
S-8240ACR-I6T1U	(10)	Inhibited	Available	Load disconnection	V_{RIOV}
S-8240ACU-I6T1U	(11)	Enabled	Unavailable	Load disconnection	V_{RIOV}
S-8240ACV-I6T1U	(9)	Inhibited	Available	Load disconnection	V_{RIOV}
S-8240ACW-I6T1U	(9)	Inhibited	Available	Load disconnection	V_{RIOV}
S-8240ACY-I6T1U	(12)	Inhibited	Available	Load disconnection	V_{RIOV}
S-8240ADB-I6T1U	(13)	Enabled	Available	Load disconnection	V_{DIOV}
S-8240ADC-I6T1U	(10)	Enabled	Available	Charger connection	V_{DIOV}
S-8240ADF-I6T1U	(12)	Inhibited	Available	Load disconnection	V_{DIOV}
S-8240ADG-I6T1U	(9)	Inhibited	Unavailable	Load disconnection	V_{RIOV}
S-8240ADH-I6T1U	(4)	Enabled	Available	Load disconnection	V_{DIOV}
S-8240ADJ-I6T1U	(4)	Inhibited	Available	Load disconnection	V_{DIOV}
S-8240ADK-I6T1U	(6)	Enabled	Available	Load disconnection	V_{RIOV}
S-8240ADM-I6T1U	(6)	Inhibited	Available	Load disconnection	V_{RIOV}
S-8240ADO-I6T1U	(14)	Enabled	Unavailable	Load disconnection	V_{RIOV}
S-8240ADS-I6T1U	(4)	Inhibited	Available	Load disconnection	V_{DIOV}
S-8240ADU-I6T1U	(7)	Inhibited	Available	Load disconnection	V_{DIOV}
S-8240ADV-I6T1U	(7)	Inhibited	Available	Load disconnection	V_{DIOV}
S-8240ADW-I6T1U	(9)	Enabled	Unavailable	Load disconnection	V_{RIOV}
S-8240ADX-I6T1U	(6)	Inhibited	Unavailable	Load disconnection	V_{RIOV}
S-8240ADZ-I6T1U	(16)	Enabled	Unavailable	Load disconnection	V_{RIOV}
S-8240AEA-I6T1U	(17)	Enabled	Unavailable	Load disconnection	V_{RIOV}
S-8240AEC-I6T1U	(15)	Inhibited	Unavailable	Load disconnection	V_{RIOV}
S-8240AED-I6T1U	(5)	Enabled	Unavailable	Load disconnection	V_{RIOV}
S-8240AEE-I6T1U	(3)	Enabled	Unavailable	Load disconnection	V_{DIOV}
S-8240AEF-I6T1U	(6)	Inhibited	Unavailable	Load disconnection	V_{RIOV}
S-8240AEG-I6T1U	(9)	Inhibited	Available	Load disconnection	V_{RIOV}
S-8240AEI-I6T1U	(13)	Enabled	Unavailable	Load disconnection	V_{RIOV}
S-8240AEJ-I6T1U	(18)	Enabled	Unavailable	Load disconnection	V_{RIOV}

Table 3 (6 / 6)

Product Name	Delay Time Combination*1	0 V Battery Charge	Power-down Function	Release Condition of Discharge Overcurrent Status	Release Voltage of Discharge Overcurrent Status
S-8240AEM-I6T1U	(9)	Inhibited	Unavailable	Load disconnection	V_{RIOV}
S-8240AEN-I6T1U	(9)	Inhibited	Unavailable	Load disconnection	V_{RIOV}
S-8240AEO-I6T1U	(11)	Inhibited	Available	Load disconnection	V_{RIOV}
S-8240AEP-I6T1U	(9)	Inhibited	Available	Load disconnection	V_{RIOV}
S-8240AEQ-I6T1U	(10)	Inhibited	Available	Load disconnection	V_{RIOV}
S-8240AER-I6T1U	(21)	Enabled	Available	Load disconnection	V_{RIOV}
S-8240AET-I6T1U	(6)	Inhibited	Unavailable	Load disconnection	V_{RIOV}
S-8240AEU-I6T1U	(1)	Inhibited	Available	Load disconnection	V_{RIOV}
S-8240AEV-I6T1U	(10)	Inhibited	Available	Load disconnection	V_{RIOV}
S-8240AEW-I6T1U	(10)	Inhibited	Available	Load disconnection	V_{RIOV}
S-8240AEY-I6T1U	(9)	Inhibited	Unavailable	Charger connection	V_{DIOV}
S-8240AEZ-I6T1U	(3)	Enabled	Unavailable	Load disconnection	V_{RIOV}
S-8240AFA-I6T1U	(22)	Inhibited	Unavailable	Load disconnection	V_{RIOV}
S-8240AFD-I6T1U	(11)	Inhibited	Available	Load disconnection	V_{RIOV}
S-8240AFH-I6T1U	(6)	Inhibited	Available	Load disconnection	V_{RIOV}
S-8240AFI-I6T1U	(6)	Inhibited	Available	Load disconnection	V_{RIOV}
S-8240AFK-I6T1U	(9)	Inhibited	Available	Load disconnection	V_{RIOV}
S-8240AFL-I6T1U	(3)	Enabled	Available	Load disconnection	V_{RIOV}
S-8240AFM-I6T1U	(13)	Inhibited	Available	Load disconnection	V_{RIOV}
S-8240AFP-I6T1U	(13)	Inhibited	Available	Charger connection	V_{DIOV}
S-8240AFR-I6T1U	(11)	Inhibited	Available	Load disconnection	V_{RIOV}
S-8240AFS-I6T1U	(3)	Enabled	Unavailable	Load disconnection	V_{RIOV}
S-8240AFT-I6T1U	(22)	Inhibited	Unavailable	Load disconnection	V_{RIOV}
S-8240AFV-I6T1U	(11)	Enabled	Available	Load disconnection	V_{RIOV}
S-8240AFW-I6T1U	(12)	Inhibited	Available	Load disconnection	V_{RIOV}
S-8240AGD-I6T1U	(3)	Enabled	Available	Charger connection	V_{DIOV}
S-8240AGH-I6T1U	(3)	Enabled	Available	Load disconnection	V_{DIOV}
S-8240AGI-I6T1U	(9)	Inhibited	Available	Load disconnection	V_{RIOV}

***1.** Refer to **Table 5** about the details of the delay time combinations.

Remark Please contact our sales representatives for products other than the above.

3. 3 HSNT-6(1212)

Table 4 (1 / 2)

Product Name	Overcharge Detection Voltage [V_{CU}]	Overcharge Release Voltage [V_{CL}]	Overdischarge Detection Voltage [V_{DL}]	Overdischarge Release Voltage [V_{DU}]	Discharge Overcurrent Detection Voltage [V_{DIOV}]	Load Short-circuiting Detection Voltage [V_{SHORT}]	Charge Overcurrent Detection Voltage [V_{CIOV}]
S-8240AAC-A6T2U	4.420 V	4.220 V	2.500 V	2.900 V	0.050 V	0.300 V	−0.040 V
S-8240AAD-A6T2U	4.420 V	4.220 V	2.500 V	2.900 V	0.050 V	0.300 V	−0.040 V
S-8240ABO-A6T2U	4.425 V	4.225 V	3.300 V	3.300 V	0.050 V	0.250 V	−0.050 V
S-8240ABR-A6T2U	4.500 V	4.350 V	2.400 V	2.500 V	0.110 V	0.235 V	−0.105 V
S-8240ACE-A6T2U	4.350 V	4.200 V	2.400 V	2.500 V	0.195 V	0.245 V	−0.150 V
S-8240ADA-A6T2U	4.400 V	4.300 V	2.800 V	3.000 V	0.100 V	0.500 V	−0.100 V
S-8240ADI-A6T2U	4.475 V	4.275 V	3.300 V	3.300 V	0.050 V	0.250 V	−0.050 V
S-8240ADN-A6T2U	4.280 V	4.180 V	2.700 V	2.900 V	0.030 V	0.105 V	−0.020 V
S-8240ADP-A6T2U	4.475 V	4.275 V	2.800 V	2.800 V	0.050 V	0.250 V	−0.050 V
S-8240ADT-A6T2U	4.250 V	3.950 V	2.500 V	2.800 V	0.050 V	0.100 V	−0.050 V
S-8240AEK-A6T2U	4.425 V	4.375 V	2.880 V	3.080 V	0.065 V	0.140 V	−0.020 V
S-8240AEL-A6T2U	4.500 V	4.250 V	2.800 V	2.800 V	0.050 V	0.250 V	−0.050 V
S-8240AES-A6T2U	4.500 V	4.250 V	2.800 V	2.800 V	0.050 V	0.250 V	−0.050 V
S-8240AEX-A6T2U	4.425 V	4.225 V	2.500 V	2.900 V	0.070 V	0.145 V	−0.045 V
S-8240AFB-A6T2U	4.550 V	4.350 V	2.800 V	3.000 V	0.045 V	0.095 V	−0.040 V
S-8240AFC-A6T2U	4.460 V	4.310 V	2.500 V	2.900 V	0.050 V	0.125 V	-0.050 V
S-8240AFE-A6T2U	4.460 V	4.310 V	2.900 V	3.050 V	0.050 V	0.125 V	-0.050 V
S-8240AFF-A6T2U	4.425 V	4.225 V	2.800 V	2.800 V	0.050 V	0.150 V	-0.050 V
S-8240AFG-A6T2U	4.475 V	4.275 V	2.500 V	2.900 V	0.100 V	0.200 V	-0.065 V
S-8240AFN-A6T2U	4.550 V	4.350 V	2.600 V	2.600 V	0.050 V	0.250 V	-0.050 V
S-8240AFO-A6T2U	4.550 V	4.350 V	2.800 V	3.000 V	0.045 V	0.095 V	-0.040 V
S-8240AFQ-A6T2U	4.475 V	4.275 V	2.800 V	2.800 V	0.050 V	0.250 V	-0.025 V
S-8240AFU-A6T2U	4.465 V	4.415 V	2.880 V	3.080 V	0.065 V	0.140 V	-0.020 V
S-8240AFX-A6T2U	4.555 V	4.505 V	2.500 V	2.500 V	0.040 V	0.115 V	-0.019 V
S-8240AFZ-A6T2U	4.510 V	4.360 V	2.900 V	3.050 V	0.050 V	0.125 V	-0.050 V
S-8240AGA-A6T2U	4.500 V	4.400 V	2.800 V	2.900 V	0.055 V	0.105 V	-0.050 V
S-8240AGB-A6T2U	4.550 V	4.400 V	2.600 V	2.900 V	0.075 V	0.125 V	-0.065 V
S-8240AGE-A6T2U	4.575 V	4.375 V	2.500 V	2.700 V	0.060 V	0.185 V	-0.060 V
S-8240AGG-A6T2U	4.460 V	4.310 V	2.900 V	3.050 V	0.025 V	0.075 V	-0.025 V
S-8240AGK-A6T2U	4.510 V	4.360 V	2.900 V	3.050 V	0.025 V	0.075 V	-0.025 V

Table 4 (2 / 2)

Product Name	Delay Time Combination*1	0 V Battery Charge	Power-down Function	Release Condition of Discharge Overcurrent Status	Release Voltage of Discharge Overcurrent Status
S-8240AAC-A6T2U	(2)	Enabled	Unavailable	Load disconnection	V_{RIOV}
S-8240AAD-A6T2U	(2)	Inhibited	Unavailable	Load disconnection	V_{RIOV}
S-8240ABO-A6T2U	(4)	Enabled	Available	Load disconnection	V_{DIOV}
S-8240ABR-A6T2U	(6)	Inhibited	Available	Load disconnection	V_{RIOV}
S-8240ACE-A6T2U	(10)	Inhibited	Available	Load disconnection	V_{RIOV}
S-8240ADA-A6T2U	(7)	Enabled	Available	Load disconnection	V_{DIOV}
S-8240ADI-A6T2U	(4)	Enabled	Available	Load disconnection	V_{DIOV}
S-8240ADN-A6T2U	(2)	Inhibited	Available	Load disconnection	V_{RIOV}
S-8240ADP-A6T2U	(4)	Enabled	Available	Load disconnection	V_{DIOV}
S-8240ADT-A6T2U	(4)	Inhibited	Available	Load disconnection	V_{DIOV}
S-8240AEK-A6T2U	(19)	Inhibited	Available	Charger connection	V_{DIOV}
S-8240AEL-A6T2U	(20)	Enabled	Available	Charger connection	V_{DIOV}
S-8240AES-A6T2U	(20)	Enabled	Available	Load disconnection	V_{DIOV}
S-8240AEX-A6T2U	(4)	Enabled	Unavailable	Load disconnection	V_{RIOV}
S-8240AFB-A6T2U	(6)	Inhibited	Available	Load disconnection	V_{RIOV}
S-8240AFC-A6T2U	(4)	Inhibited	Available	Load disconnection	V_{RIOV}
S-8240AFE-A6T2U	(4)	Inhibited	Available	Load disconnection	V_{RIOV}
S-8240AFF-A6T2U	(9)	Enabled	Available	Load disconnection	V_{RIOV}
S-8240AFG-A6T2U	(24)	Inhibited	Available	Load disconnection	V_{RIOV}
S-8240AFN-A6T2U	(20)	Enabled	Available	Load disconnection	V_{DIOV}
S-8240AFO-A6T2U	(6)	Enabled	Available	Load disconnection	V_{RIOV}
S-8240AFQ-A6T2U	(4)	Enabled	Available	Load disconnection	V_{DIOV}
S-8240AFU-A6T2U	(19)	Inhibited	Available	Charger connection	V_{DIOV}
S-8240AFX-A6T2U	(25)	Enabled	Available	Load disconnection	V_{RIOV}
S-8240AFZ-A6T2U	(4)	Inhibited	Available	Load disconnection	V_{RIOV}
S-8240AGA-A6T2U	(4)	Enabled	Available	Load disconnection	V_{RIOV}
S-8240AGB-A6T2U	(22)	Inhibited	Available	Load disconnection	V_{RIOV}
S-8240AGE-A6T2U	(11)	Inhibited	Available	Load disconnection	V_{RIOV}
S-8240AGG-A6T2U	(4)	Inhibited	Available	Load disconnection	V_{RIOV}
S-8240AGK-A6T2U	(4)	Inhibited	Available	Load disconnection	V_{RIOV}

***1.** Refer to **Table 5** about the details of the delay time combinations.

Remark Please contact our sales representatives for products other than the above.

Table 5

Delay Time Combination	Overcharge Detection Delay Time [t_{CU}]	Overdischarge Detection Delay Time [t_{DL}]	Discharge Overcurrent Detection Delay Time [t_{DIOV}]	Load Short-circuiting Detection Delay Time [t_{SHORT}]	Charge Overcurrent Detection Delay Time [t_{CIOV}]
(1)	1.0 s	32 ms	16 ms	280 µs	4 ms
(2)	1.0 s	64 ms	16 ms	280 µs	8 ms
(3)	1.0 s	32 ms	8 ms	280 µs	8 ms
(4)	1.0 s	64 ms	8 ms	280 µs	8 ms
(5)	1.0 s	64 ms	8 ms	280 µs	4 ms
(6)	1.0 s	64 ms	16 ms	280 µs	16 ms
(7)	1.0 s	128 ms	8 ms	280 µs	8 ms
(8)	1.0 s	32 ms	16 ms	530 µs	16 ms
(9)	1.0 s	32 ms	16 ms	280 µs	16 ms
(10)	1.0 s	64 ms	32 ms	280 µs	16 ms
(11)	1.0 s	32 ms	16 ms	280 µs	8 ms
(12)	1.0 s	32 ms	32 ms	280 µs	16 ms
(13)	1.0 s	128 ms	16 ms	280 µs	8 ms
(14)	1.0 s	32 ms	8 ms	280 µs	16 ms
(15)	1.0 s	64 ms	8 ms	530 µs	8 ms
(16)	512 ms	128 ms	16 ms	530 µs	16 ms
(17)	1.0 s	128 ms	16 ms	530 µs	16 ms
(18)	1.0 s	128 ms	32 ms	530 µs	32 ms
(19)	256 ms	128 ms	8 ms	280 µs	8 ms
(20)	1.0 s	64 ms	32 ms	280 µs	8 ms
(21)	1.0 s	32 ms	32 ms	280 µs	8 ms
(22)	1.0 s	64 ms	16 ms	530 µs	16 ms
(23)	256 ms	32 ms	8 ms	280 µs	16 ms
(24)	1.0 s	64 ms	32 ms	280 µs	32 ms
(25)	1.0 s	128 ms	32 ms	280 µs	8 ms
(26)	1.0 s	256 ms	32 ms	530 µs	32 ms

Remark The delay times can be changed within the range listed in **Table 6**. For details, please contact our sales representatives.

Table 6

Delay Time	Symbol	Selection Range			Remark
Overcharge detection delay time	t_{CU}	256 ms	512 ms	1.0 s*1	Select a value from the left.
Overdischarge detection delay time	t_{DL}	32 ms	64 ms*1	128 ms	Select a value from the left.
Discharge overcurrent detection delay time	t_{DIOV}	4 ms	8 ms*1	16 ms	Select a value from the left.
Load short-circuiting detection delay time	t_{SHORT}	280 µs*1	530 µs	–	Select a value from the left.
Charge overcurrent detection delay time	t_{CIOV}	4 ms	8 ms*1	16 ms	Select a value from the left.

***1.** This value is the delay time of the standard product.

■ Pin Configurations

1. SOT-23-6

Top view

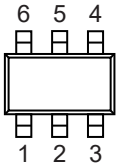

Figure 2

Table 7

Pin No.	Symbol	Description
1	DO	Connection pin of discharge control FET gate (CMOS output)
2	VM	Voltage detection pin between VM pin and VSS pin (Overcurrent / charger detection pin)
3	CO	Connection pin of charge control FET gate (CMOS output)
4	NC*1	No connection
5	VDD	Input pin for positive power supply
6	VSS	Input pin for negative power supply

***1.** The NC pin is electrically open.
The NC pin can be connected to VDD pin or VSS pin.

2. SNT-6A

Top view

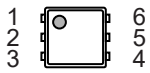

Figure 3

Table 8

Pin No.	Symbol	Description
1	NC*1	No connection
2	CO	Connection pin of charge control FET gate (CMOS output)
3	DO	Connection pin of discharge control FET gate (CMOS output)
4	VSS	Input pin for negative power supply
5	VDD	Input pin for positive power supply
6	VM	Voltage detection pin between VM pin and VSS pin (Overcurrent / charger detection pin)

***1.** The NC pin is electrically open.
The NC pin can be connected to VDD pin or VSS pin.

3. HSNT-6(1212)

Top view



Bottom view

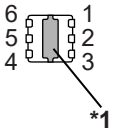

Figure 4

Table 9

Pin No.	Symbol	Description
1	NC*2	No connection
2	CO	Connection pin of charge control FET gate (CMOS output)
3	DO	Connection pin of discharge control FET gate (CMOS output)
4	VSS	Input pin for negative power supply
5	VDD	Input pin for positive power supply
6	VM	Voltage detection pin between VM pin and VSS pin (Overcurrent / charger detection pin)

***1.** Connect the heat sink of backside at shadowed area to the board, and set electric potential open or VDD.
However, do not use it as the function of electrode.
***2.** The NC pin is electrically open.
The NC pin can be connected to VDD pin or VSS pin.

■ Absolute Maximum Ratings

Table 10

(Ta = +25°C unless otherwise specified)

Item	Symbol	Applied Pin	Absolute Maximum Rating	Unit
Input voltage between VDD pin and VSS pin	V_{DS}	VDD	V_{SS} – 0.3 to V_{SS} + 6	V
VM pin input voltage	V_{VM}	VM	V_{DD} – 28 to V_{DD} + 0.3	V
DO pin output voltage	V_{DO}	DO	V_{SS} – 0.3 to V_{DD} + 0.3	V
CO pin output voltage	V_{CO}	CO	V_{VM} – 0.3 to V_{DD} + 0.3	V
Operation ambient temperature	T_{opr}	–	–40 to +85	°C
Storage temperature	T_{stg}	–	–55 to +125	°C

Caution The absolute maximum ratings are rated values exceeding which the product could suffer physical damage. These values must therefore not be exceeded under any conditions.

■ Thermal Resistance Value

Table 11

Item	Symbol	Condition		Min.	Typ.	Max.	Unit
Junction-to-ambient thermal resistance*1	θ_{JA}	SOT-23-6	Board A	–	159	–	°C/W
			Board B	–	124	–	°C/W
			Board C	–	–	–	°C/W
			Board D	–	–	–	°C/W
			Board E	–	–	–	°C/W
		SNT-6A	Board A	–	224	–	°C/W
			Board B	–	176	–	°C/W
			Board C	–	–	–	°C/W
			Board D	–	–	–	°C/W
			Board E	–	–	–	°C/W
		HSNT-6(1212)	Board A	–	234	–	°C/W
			Board B	–	193	–	°C/W
			Board C	–	–	–	°C/W
			Board D	–	–	–	°C/W
			Board E	–	–	–	°C/W

***1.** Test environment: compliance with JEDEC STANDARD JESD51-2A

Remark Refer to "■ **Power Dissipation**" and "**Test Board**" for details.

■ Electrical Characteristics

1. Ta = +25°C

Table 12

(Ta = +25°C unless otherwise specified)

Item	Symbol	Condition	Min.	Typ.	Max.	Unit	Test Circuit
Detection Voltage							
Overcharge detection voltage	V_{CU}	–	$V_{CU}-0.020$	V_{CU}	$V_{CU}+0.020$	V	1
		Ta = −10°C to +60°C*1	$V_{CU}-0.025$	V_{CU}	$V_{CU}+0.025$	V	1
Overcharge release voltage	V_{CL}	$V_{CL} \neq V_{CU}$	$V_{CL}-0.050$	V_{CL}	$V_{CL}+0.050$	V	1
		$V_{CL} = V_{CU}$	$V_{CL}-0.025$	V_{CL}	$V_{CL}+0.020$	V	1
Overdischarge detection voltage	V_{DL}	–	$V_{DL}-0.050$	V_{DL}	$V_{DL}+0.050$	V	2
Overdischarge release voltage	V_{DU}	$V_{DL} \neq V_{DU}$	$V_{DU}-0.100$	V_{DU}	$V_{DU}+0.100$	V	2
		$V_{DL} = V_{DU}$	$V_{DU}-0.050$	V_{DU}	$V_{DU}+0.050$	V	2
Discharge overcurrent detection voltage	V_{DIOV}	–	$V_{DIOV}-0.005$	V_{DIOV}	$V_{DIOV}+0.005$	V	2
Load short-circuiting detection voltage	V_{SHORT}	–	$V_{SHORT}-0.040$	V_{SHORT}	$V_{SHORT}+0.040$	V	2
Charge overcurrent detection voltage	V_{CIOV}	–	$V_{CIOV}-0.005$	V_{CIOV}	$V_{CIOV}+0.005$	V	2
Discharge overcurrent release voltage	V_{RIOV}	–	$V_{DD}-1.2$	$V_{DD}-0.8$	$V_{DD}-0.5$	V	2
0 V Battery Charge							
0 V battery charge starting charger voltage	V_{0CHA}	0 V battery charge enabled	0.0	0.7	1.5	V	2
0 V battery charge inhibition battery voltage	V_{0INH}	0 V battery charge inhibited	0.9	1.2	1.5	V	2
Internal Resistance							
Resistance between VDD pin and VM pin	R_{VMD}	V_{DD} = 1.8 V, V_{VM} = 0 V	750	1500	3000	kΩ	3
Resistance between VM pin and VSS pin	R_{VMS}	V_{DD} = 3.4 V, V_{VM} = 1.0 V	10	20	30	kΩ	3
Input Voltage							
Operation voltage between VDD pin and VSS pin	V_{DSOP1}	–	1.5	–	6.0	V	–
Operation voltage between VDD pin and VM pin	V_{DSOP2}	–	1.5	–	28	V	–
Input Current							
Current consumption during operation	I_{OPE}	V_{DD} = 3.4 V, V_{VM} = 0 V	–	1.5	3.0	μA	3
Current consumption during power-down	I_{PDN}	$V_{DD} = V_{VM}$ = 1.5 V	–	–	50	nA	3
Current consumption during overdischarge	I_{OPED}	$V_{DD} = V_{VM}$ = 1.5 V	–	–	0.5	μA	3
Output Resistance							
CO pin resistance "H"	R_{COH}	–	5	10	20	kΩ	4
CO pin resistance "L"	R_{COL}	–	5	10	20	kΩ	4
DO pin resistance "H"	R_{DOH}	–	5	10	20	kΩ	4
DO pin resistance "L"	R_{DOL}	–	5	10	20	kΩ	4
Delay Time							
Overcharge detection delay time	t_{CU}	–	$t_{CU} \times 0.7$	t_{CU}	$t_{CU} \times 1.3$	–	5
Overdischarge detection delay time	t_{DL}	–	$t_{DL} \times 0.7$	t_{DL}	$t_{DL} \times 1.3$	–	5
Discharge overcurrent detection delay time	t_{DIOV}	–	$t_{DIOV} \times 0.7$	t_{DIOV}	$t_{DIOV} \times 1.3$	–	5
Load short-circuiting detection delay time	t_{SHORT}	–	$t_{SHORT} \times 0.7$	t_{SHORT}	$t_{SHORT} \times 1.3$	–	5
Charge overcurrent detection delay time	t_{CIOV}	–	$t_{CIOV} \times 0.7$	t_{CIOV}	$t_{CIOV} \times 1.3$	–	5

***1.** Since products are not screened at high and low temperature, the specification for this temperature range is guaranteed by design, not tested in production.

2. Ta = –20°C to +60°C*1

Table 13

(Ta = –20°C to +60°C*1 unless otherwise specified)

Item	Symbol	Condition	Min.	Typ.	Max.	Unit	Test Circuit
Detection Voltage							
Overcharge detection voltage	V_{CU}	–	$V_{CU}-0.035$	V_{CU}	$V_{CU}+0.027$	V	1
Overcharge release voltage	V_{CL}	$V_{CL} \neq V_{CU}$	$V_{CL}-0.065$	V_{CL}	$V_{CL}+0.057$	V	1
		$V_{CL} = V_{CU}$	$V_{CL}-0.040$	V_{CL}	$V_{CL}+0.027$	V	1
Overdischarge detection voltage	V_{DL}	–	$V_{DL}-0.060$	V_{DL}	$V_{DL}+0.055$	V	2
Overdischarge release voltage	V_{DU}	$V_{DL} \neq V_{DU}$	$V_{DU}-0.110$	V_{DU}	$V_{DU}+0.105$	V	2
		$V_{DL} = V_{DU}$	$V_{DU}-0.060$	V_{DU}	$V_{DU}+0.055$	V	2
Discharge overcurrent detection voltage	V_{DIOV}	–	$V_{DIOV}-0.005$	V_{DIOV}	$V_{DIOV}+0.005$	V	2
Load short-circuiting detection voltage	V_{SHORT}	–	$V_{SHORT}-0.040$	V_{SHORT}	$V_{SHORT}+0.040$	V	2
Charge overcurrent detection voltage	V_{CIOV}	–	$V_{CIOV}-0.005$	V_{CIOV}	$V_{CIOV}+0.005$	V	2
Discharge overcurrent release voltage	V_{RIOV}	–	$V_{DD}-1.4$	$V_{DD}-0.8$	$V_{DD}-0.3$	V	2
0 V Battery Charge							
0 V battery charge starting charger voltage	V_{0CHA}	0 V battery charge enabled	0.0	0.7	1.7	V	2
0 V battery charge inhibition battery voltage	V_{0INH}	0 V battery charge inhibited	0.7	1.2	1.7	V	2
Internal Resistance							
Resistance between VDD pin and VM pin	R_{VMD}	V_{DD} = 1.8 V, V_{VM} = 0 V	500	1500	6000	kΩ	3
Resistance between VM pin and VSS pin	R_{VMS}	V_{DD} = 3.4 V, V_{VM} = 1.0 V	7.5	20	40	kΩ	3
Input Voltage							
Operation voltage between VDD pin and VSS pin	V_{DSOP1}	–	1.5	–	6.0	V	–
Operation voltage between VDD pin and VM pin	V_{DSOP2}	–	1.5	–	28	V	–
Input Current							
Current consumption during operation	I_{OPE}	V_{DD} = 3.4 V, V_{VM} = 0 V	–	1.5	4.0	μA	3
Current consumption during power-down	I_{PDN}	$V_{DD} = V_{VM}$ = 1.5 V	–	–	150	nA	3
Current consumption during overdischarge	I_{OPED}	$V_{DD} = V_{VM}$ = 1.5 V	–	–	1.0	μA	3
Output Resistance							
CO pin resistance "H"	R_{COH}	–	2.5	10	30	kΩ	4
CO pin resistance "L"	R_{COL}	–	2.5	10	30	kΩ	4
DO pin resistance "H"	R_{DOH}	–	2.5	10	30	kΩ	4
DO pin resistance "L"	R_{DOL}	–	2.5	10	30	kΩ	4
Delay Time							
Overcharge detection delay time	t_{CU}	–	$t_{CU} \times 0.55$	t_{CU}	$t_{CU} \times 2.0$	–	5
Overdischarge detection delay time	t_{DL}	–	$t_{DL} \times 0.55$	t_{DL}	$t_{DL} \times 2.0$	–	5
Discharge overcurrent detection delay time	t_{DIOV}	–	$t_{DIOV} \times 0.55$	t_{DIOV}	$t_{DIOV} \times 2.0$	–	5
Load short-circuiting detection delay time	t_{SHORT}	–	$t_{SHORT} \times 0.55$	t_{SHORT}	$t_{SHORT} \times 2.0$	–	5
Charge overcurrent detection delay time	t_{CIOV}	–	$t_{CIOV} \times 0.55$	t_{CIOV}	$t_{CIOV} \times 2.0$	–	5

***1.** Since products are not screened at high and low temperature, the specification for this temperature range is guaranteed by design, not tested in production.

3. Ta = –40°C to +85°C*1

Table 14

(Ta = –40°C to +85°C*1 unless otherwise specified)

Item	Symbol	Condition	Min.	Typ.	Max.	Unit	Test Circuit
Detection Voltage							
Overcharge detection voltage	V_{CU}	–	$V_{CU}-0.045$	V_{CU}	$V_{CU}+0.030$	V	1
Overcharge release voltage	V_{CL}	$V_{CL} \neq V_{CU}$	$V_{CL}-0.080$	V_{CL}	$V_{CL}+0.060$	V	1
		$V_{CL} = V_{CU}$	$V_{CL}-0.050$	V_{CL}	$V_{CL}+0.030$	V	1
Overdischarge detection voltage	V_{DL}	–	$V_{DL}-0.080$	V_{DL}	$V_{DL}+0.060$	V	2
Overdischarge release voltage	V_{DU}	$V_{DL} \neq V_{DU}$	$V_{DU}-0.130$	V_{DU}	$V_{DU}+0.110$	V	2
		$V_{DL} = V_{DU}$	$V_{DU}-0.080$	V_{DU}	$V_{DU}+0.060$	V	2
Discharge overcurrent detection voltage	V_{DIOV}	–	$V_{DIOV}-0.005$	V_{DIOV}	$V_{DIOV}+0.005$	V	2
Load short-circuiting detection voltage	V_{SHORT}	–	$V_{SHORT}-0.040$	V_{SHORT}	$V_{SHORT}+0.040$	V	2
Charge overcurrent detection voltage	V_{CIOV}	–	$V_{CIOV}-0.005$	V_{CIOV}	$V_{CIOV}+0.005$	V	2
Discharge overcurrent release voltage	V_{RIOV}	–	$V_{DD}-1.4$	$V_{DD}-0.8$	$V_{DD}-0.3$	V	2
0 V Battery Charge							
0 V battery charge starting charger voltage	V_{0CHA}	0 V battery charge enabled	0.0	0.7	1.7	V	2
0 V battery charge inhibition battery voltage	V_{0INH}	0 V battery charge inhibited	0.7	1.2	1.7	V	2
Internal Resistance							
Resistance between VDD pin and VM pin	R_{VMD}	V_{DD} = 1.8 V, V_{VM} = 0 V	500	1500	6000	kΩ	3
Resistance between VM pin and VSS pin	R_{VMS}	V_{DD} = 3.4 V, V_{VM} = 1.0 V	7.5	20	40	kΩ	3
Input Voltage							
Operation voltage between VDD pin and VSS pin	V_{DSOP1}	–	1.5	–	6.0	V	–
Operation voltage between VDD pin and VM pin	V_{DSOP2}	–	1.5	–	28	V	–
Input Current							
Current consumption during operation	I_{OPE}	V_{DD} = 3.4 V, V_{VM} = 0 V	–	1.5	4.0	μA	3
Current consumption during power-down	I_{PDN}	$V_{DD} = V_{VM}$ = 1.5 V	–	–	150	nA	3
Current consumption during overdischarge	I_{OPED}	$V_{DD} = V_{VM}$ = 1.5 V	–	–	1.0	μA	3
Output Resistance							
CO pin resistance "H"	R_{COH}	–	2.5	10	30	kΩ	4
CO pin resistance "L"	R_{COL}	–	2.5	10	30	kΩ	4
DO pin resistance "H"	R_{DOH}	–	2.5	10	30	kΩ	4
DO pin resistance "L"	R_{DOL}	–	2.5	10	30	kΩ	4
Delay Time							
Overcharge detection delay time	t_{CU}	–	$t_{CU} \times 0.5$	t_{CU}	$t_{CU} \times 2.5$	–	5
Overdischarge detection delay time	t_{DL}	–	$t_{DL} \times 0.5$	t_{DL}	$t_{DL} \times 2.5$	–	5
Discharge overcurrent detection delay time	t_{DIOV}	–	$t_{DIOV} \times 0.5$	t_{DIOV}	$t_{DIOV} \times 2.5$	–	5
Load short-circuiting detection delay time	t_{SHORT}	–	$t_{SHORT} \times 0.5$	t_{SHORT}	$t_{SHORT} \times 2.5$	–	5
Charge overcurrent detection delay time	t_{CIOV}	–	$t_{CIOV} \times 0.5$	t_{CIOV}	$t_{CIOV} \times 2.5$	–	5

***1.** Since products are not screened at high and low temperature, the specification for this temperature range is guaranteed by design, not tested in production.

■ Test Circuits

Caution Unless otherwise specified, the output voltage levels "H" and "L" at CO pin (V_{CO}) and DO pin (V_{DO}) are judged by the threshold voltage (1.0 V) of the N-channel FET. Judge the CO pin level with respect to V_{VM} and the DO pin level with respect to V_{SS}.

1. Overcharge detection voltage, overcharge release voltage (Test circuit 1)

Overcharge detection voltage (V_{CU}) is defined as the voltage V1 at which V_{CO} goes from "H" to "L" when the voltage V1 is gradually increased from the starting condition of V1 = 3.4 V. Overcharge release voltage (V_{CL}) is defined as the voltage V1 at which V_{CO} goes from "L" to "H" when the voltage V1 is then gradually decreased. Overcharge hysteresis voltage (V_{HC}) is defined as the difference between V_{CU} and V_{CL}.

2. Overdischarge detection voltage, overdischarge release voltage (Test circuit 2)

Overdischarge detection voltage (V_{DL}) is defined as the voltage V1 at which V_{DO} goes from "H" to "L" when the voltage V1 is gradually decreased from the starting conditions of V1 = 3.4 V, V2 = 0 V. Overdischarge release voltage (V_{DU}) is defined as the voltage V1 at which V_{DO} goes from "L" to "H" when setting V2 = 0.01 V and when the voltage V1 is then gradually increased. Overdischarge hysteresis voltage (V_{HD}) is defined as the difference between V_{DU} and V_{DL}.

3. Discharge overcurrent detection voltage, discharge overcurrent release voltage (Test circuit 2)

3. 1 Release voltage of discharge overcurrent status "V_{DIOV}"

Discharge overcurrent detection voltage (V_{DIOV}) is defined as the voltage V2 whose delay time for changing V_{DO} from "H" to "L" is discharge overcurrent detection delay time (t_{DIOV}) when the voltage V2 is increased from the starting conditions of V1 = 3.4 V, V2 = 0 V. V_{DO} goes from "L" to "H" when setting V2 = 3.4 V and when the voltage V2 is then gradually decreased to V_{DIOV} typ. or lower.

3. 2 Release voltage of discharge overcurrent status "V_{RIOV}"

V_{DIOV} is defined as the voltage V2 whose delay time for changing V_{DO} from "H" to "L" is t_{DIOV} when the voltage V2 is increased from the starting conditions of V1 = 3.4 V, V2 = 0 V. Discharge overcurrent release voltage (V_{RIOV}) is defined as the voltage V2 at which V_{DO} goes from "L" to "H" when setting V2 = 3.4 V and when the voltage V2 is then gradually decreased.

4. Load short-circuiting detection voltage (Test circuit 2)

Load short-circuiting detection voltage (V_{SHORT}) is defined as the voltage V2 whose delay time for changing V_{DO} from "H" to "L" is load short-circuiting detection delay time (t_{SHORT}) when the voltage V2 is increased from the starting conditions of V1 = 3.4 V, V2 = 0 V.

5. Charge overcurrent detection voltage (Test circuit 2)

Charge overcurrent detection voltage (V_{CIOV}) is defined as the voltage V2 whose delay time for changing V_{CO} from "H" to "L" is charge overcurrent detection delay time (t_{CIOV}) when the voltage V2 is decreased from the starting conditions of V1 = 3.4 V, V2 = 0 V.

6. Current consumption during operation (Test circuit 3)

The current consumption during operation (I_{OPE}) is the current that flows through the VDD pin (I_{DD}) under the set conditions of V1 = 3.4 V and V2 = 0 V.

7. Current consumption during power-down, current consumption during overdischarge (Test circuit 3)

7. 1 With power-down function

The current consumption during power-down (I_{PDN}) is I_{DD} under the set conditions of V1 = V2 = 1.5 V.

7. 2 Without power-down function

The current consumption during overdischarge (I_{OPED}) is I_{DD} under the set conditions of V1 = V2 = 1.5 V.

8. Resistance between VDD pin and VM pin (Test circuit 3)

R_{VMD} is the resistance between VDD pin and VM pin under the set conditions of V1 = 1.8 V, V2 = 0 V.

9. Resistance between VM pin and VSS pin (Release condition of discharge overcurrent status "load disconnection") (Test circuit 3)

R_{VMS} is the resistance between VM pin and VSS pin under the set conditions of V1 = 3.4 V, V2 = 1.0 V.

10. CO pin resistance "H" (Test circuit 4)

The CO pin resistance "H" (R_{COH}) is the resistance between VDD pin and CO pin under the set conditions of V1 = 3.4 V, V2 = 0 V, V3 = 3.0 V.

11. CO pin resistance "L" (Test circuit 4)

The CO pin resistance "L" (R_{COL}) is the resistance between VM pin and CO pin under the set conditions of V1 = 4.7 V, V2 = 0 V, V3 = 0.4 V.

12. DO pin resistance "H" (Test circuit 4)

The DO pin resistance "H" (R_{DOH}) is the resistance between VDD pin and DO pin under the set conditions of V1 = 3.4 V, V2 = 0 V, V4 = 3.0 V.

13. DO pin resistance "L" (Test circuit 4)

The DO pin resistance "L" (R_{DOL}) is the resistance between VSS pin and DO pin under the set conditions of V1 = 1.8 V, V2 = 0 V, V4 = 0.4 V.

14. Overcharge detection delay time (Test circuit 5)

The overcharge detection delay time (t_{CU}) is the time needed for V_{CO} to go to "L" just after the voltage V1 increases and exceeds V_{CU} under the set conditions of V1 = 3.4 V, V2 = 0 V.

15. Overdischarge detection delay time (Test circuit 5)

The overdischarge detection delay time (t_{DL}) is the time needed for V_{DO} to go to "L" after the voltage V1 decreases and falls below V_{DL} under the set conditions of V1 = 3.4 V, V2 = 0 V.

16. Discharge overcurrent detection delay time (Test circuit 5)

The discharge overcurrent detection delay time (t_{DIOV}) is the time needed for V_{DO} to go to "L" after the voltage V2 increases and exceeds V_{DIOV} under the set conditions of V1 = 3.4 V, V2 = 0 V.

17. Load short-circuiting detection delay time (Test circuit 5)

The load short-circuiting detection delay time (t_{SHORT}) is the time needed for V_{DO} to go to "L" after the voltage V2 increases and exceeds V_{SHORT} under the set conditions of V1 = 3.4 V, V2 = 0 V.

18. Charge overcurrent detection delay time (Test circuit 5)

The charge overcurrent detection delay time (t_{CIOV}) is the time needed for V_{CO} to go to "L" after the voltage V2 decreases and falls below V_{CIOV} under the set conditions of V1 = 3.4 V, V2 = 0 V.

19. 0 V battery charge starting charger voltage (0 V battery charge enabled) (Test circuit 2)

The 0 V battery charge starting charger voltage (V_{0CHA}) is defined as the absolute value of voltage V2 at which V_{CO} goes to "H" ($V_{CO} = V_{DD}$) when the voltage V2 is gradually decreased from the starting condition of V1 = V2 = 0 V.

20. 0 V battery charge inhibition battery voltage (0 V battery charge inhibited) (Test circuit 2)

The 0 V battery charge inhibition battery voltage (V_{0INH}) is defined as the voltage V1 at which V_{CO} goes to "L" ($V_{CO} = V_{VM}$) when the voltage V1 is gradually decreased, after setting V1 = 1.9 V, V2 = –4.0 V.

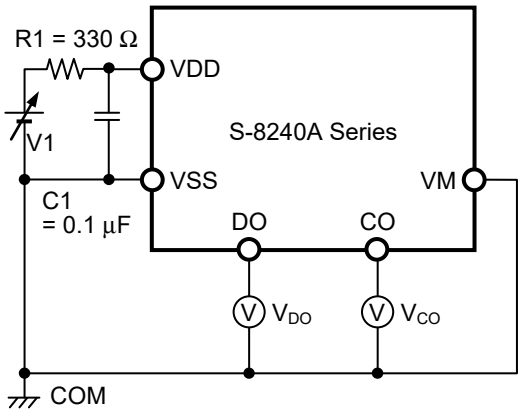

Figure 6 Test Circuit 1

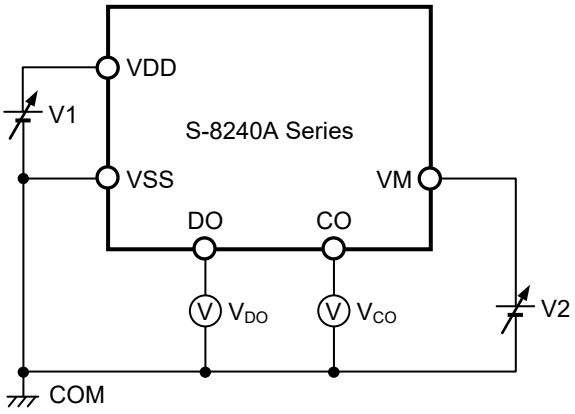

Figure 7 Test Circuit 2

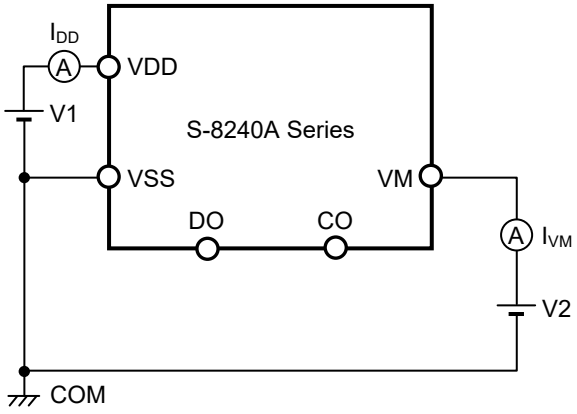

Figure 8 Test Circuit 3

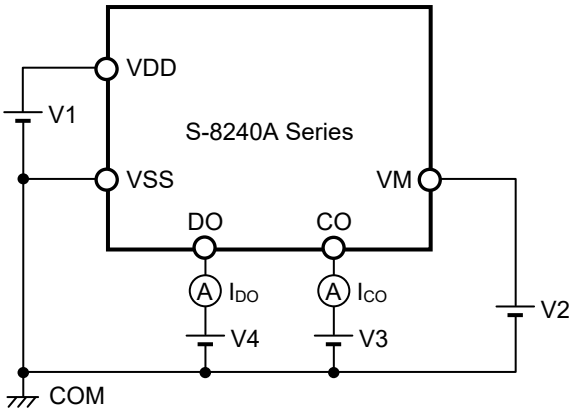

Figure 9 Test Circuit 4

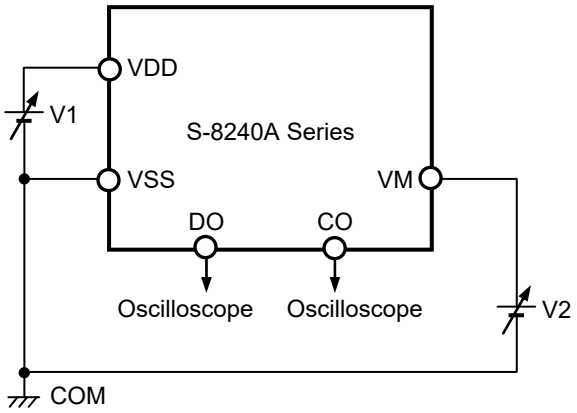

Figure 10 Test Circuit 5

■ Operation

Remark 1. Refer to "**■ Battery Protection IC Connection Example**".
2. Unless otherwise specified, the VM pin voltage is based on V_{SS}.

1. Normal status

The S-8240A Series monitors the voltage of the battery connected between VDD pin and VSS pin, the voltage between VM pin and VSS pin to control charging and discharging. When the battery voltage is in the range from overdischarge detection voltage (V_{DL}) to overcharge detection voltage (V_{CU}), and the VM pin voltage is in the range from charge overcurrent detection voltage (V_{CIOV}) to discharge overcurrent detection voltage (V_{DIOV}), the S-8240A Series turns both the charge and discharge control FETs on. This condition is called the normal status, and in this condition charging and discharging can be carried out freely.
The resistance between VDD pin and VM pin (R_{VMD}), and the resistance between VM pin and VSS pin (R_{VMS}) are not connected in the normal status.

Caution After the battery is connected, discharging may not be carried out. In this case, the S-8240A Series returns to the normal status by connecting a charger.

2. Overcharge status

2. 1 $V_{CL} \neq V_{CU}$ (Product in which overcharge release voltage differs from overcharge detection voltage)

When the battery voltage becomes higher than V_{CU} during charging in the normal status and the condition continues for the overcharge detection delay time (t_{CU}) or longer, the S-8240A Series turns the charge control FET off to stop charging. This condition is called the overcharge status.
The overcharge status is released in the following two cases.

(1) In the case that the VM pin voltage is lower than V_{DIOV}, the S-8240A Series releases the overcharge status when the battery voltage falls below overcharge release voltage (V_{CL}).
(2) In the case that the VM pin voltage is equal to or higher than V_{DIOV}, the S-8240A Series releases the overcharge status when the battery voltage falls below V_{CU}.

When the discharge is started by connecting a load after the overcharge detection, the VM pin voltage rises by the V_f voltage of the parasitic diode than the VSS pin voltage, because the discharge current flows through the parasitic diode in the charge control FET. If this VM pin voltage is equal to or higher than V_{DIOV}, the S-8240A Series releases the overcharge status when the battery voltage is equal to or lower than V_{CU}.

Caution If the battery is charged to a voltage higher than V_{CU} and the battery voltage does not fall below V_{CU} even when a heavy load is connected, discharge overcurrent detection and load short-circuiting detection do not function until the battery voltage falls below V_{CU}. Since an actual battery has an internal impedance of tens of mΩ, the battery voltage drops immediately after a heavy load that causes overcurrent is connected, and discharge overcurrent detection and load short-circuiting detection function.

2. 2 $V_{CL} = V_{CU}$ (Product in which overcharge release voltage is the same as overcharge detection voltage)

When the battery voltage becomes higher than V_{CU} during charging in the normal status and the condition continues for the overcharge detection delay time (t_{CU}) or longer, the S-8240A Series turns the charge control FET off to stop charging. This condition is called the overcharge status.
In the case that the VM pin voltage is equal to or higher than 0 V typ., the S-8240A Series releases the overcharge status when the battery voltage falls below V_{CU}.

Caution 1. If the battery is charged to a voltage higher than V_{CU} and the battery voltage does not fall below V_{CU} even when a heavy load is connected, discharge overcurrent detection and load short-circuiting detection do not function until the battery voltage falls below V_{CU}. Since an actual battery has an internal impedance of tens of mΩ, the battery voltage drops immediately after a heavy load that causes overcurrent is connected, and discharge overcurrent detection and load short-circuiting detection function.
2. When a charger is connected after overcharge detection, the overcharge status is not released even if the battery voltage is below V_{CL}. The overcharge status is released when the VM pin voltage goes over 0 V typ. by removing the charger.

3. Overdischarge status

When the battery voltage falls below V_{DL} during discharging in the normal status and the condition continues for the overdischarge detection delay time (t_{DL}) or longer, the S-8240A Series turns the discharge control FET off to stop discharging. This condition is called the overdischarge status.
Under the overdischarge status, VDD pin and VM pin are shorted by R_{VMD} in the S-8240A Series. The VM pin voltage is pulled up by R_{VMD}.
R_{VMS} is not connected in the overdischarge status.

3. 1 With power-down function

Under the overdischarge status, when voltage difference between VDD pin and VM pin is 0.8 V typ. or lower, the power-down function works and the current consumption is reduced to the current consumption during power-down (I_{PDN}). By connecting a battery charger, the power-down function is released when the VM pin voltage is 0.7 V typ. or lower.

- When a battery is not connected to a charger and the VM pin voltage $\geq$ 0.7 V typ., the S-8240A Series maintains the overdischarge status even when the battery voltage reaches V_{DU} or higher.
- When a battery is connected to a charger and 0.7 V typ. > the VM pin voltage > 0 V typ., the battery voltage reaches V_{DU} or higher and the S-8240A Series releases the overdischarge status.
- When a battery is connected to a charger and 0 V typ. $\geq$ the VM pin voltage, the battery voltage reaches V_{DL} or higher and the S-8240A Series releases the overdischarge status.

3. 2 Without power-down function

The power-down function does not work even when voltage difference between VDD pin and VM pin is 0.8 V typ. or lower.

- When a battery is not connected to a charger and the VM pin voltage $\geq$ 0.7 V typ., the battery voltage reaches V_{DU} or higher and the S-8240A Series releases the overdischarge status.
- When a battery is connected to a charger and 0.7 V typ. > the VM pin voltage > 0 V typ., the battery voltage reaches V_{DU} or higher and the S-8240A Series releases the overdischarge status.
- When a battery is connected to a charger and 0 V typ. $\geq$ the VM pin voltage, the battery voltage reaches V_{DL} or higher and the S-8240A Series releases the overdischarge status.

4. Discharge overcurrent status (discharge overcurrent, load short-circuiting)

When a battery in the normal status is in the status where the VM pin voltage is equal to or higher than V_{DIOV} because the discharge current is equal to or higher than the specified value and the status lasts for the discharge overcurrent detection delay time (t_{DIOV}) or longer, the discharge control FET is turned off and discharging is stopped. This status is called the discharge overcurrent status.

4. 1 Release condition of discharge overcurrent status "load disconnection" and release voltage of discharge overcurrent status "V_{DIOV}"

Under the discharge overcurrent status, VM pin and VSS pin are shorted by R_{VMS} in the S-8240A Series. However, the VM pin voltage is the VDD pin voltage due to the load as long as the load is connected. When the load is disconnected, VM pin returns to the VSS pin voltage.
When the VM pin voltage returns to V_{DIOV} or lower, the S-8240A Series releases the discharge overcurrent status.
R_{VMD} is not connected in the discharge overcurrent status.

4. 2 Release condition of discharge overcurrent status "load disconnection" and release voltage of discharge overcurrent status "V_{RIOV}"

Under the discharge overcurrent status, VM pin and VSS pin are shorted by R_{VMS} in the S-8240A Series. However, the VM pin voltage is the VDD pin voltage due to the load as long as the load is connected. When the load is disconnected, VM pin returns to the VSS pin voltage.
When the VM pin voltage returns to V_{RIOV} or lower, the S-8240A Series releases the discharge overcurrent status.
R_{VMD} is not connected in the discharge overcurrent status.

4. 3 Release condition of discharge overcurrent status "charger connection"

Under the discharge overcurrent status, VM pin and VDD pin are shorted by R_{VMD} in the S-8240A Series.
When a battery is connected to a charger and the VM pin voltage returns to V_{DIOV} or lower, the S-8240A Series releases the discharge overcurrent status.
R_{VMS} is not connected in the discharge overcurrent status.

5. Charge overcurrent status

When a battery in the normal status is in the status where the VM pin voltage is equal to or lower than V_{CIOV} because the charge current is equal to or higher than the specified value and the status lasts for the charge overcurrent detection delay time (t_{CIOV}) or longer, the charge control FET is turned off and charging is stopped. This status is called the charge overcurrent status.
The S-8240A Series releases the charge overcurrent status when the VM pin voltage returns to 0 V typ. or higher by removing the charger.
The charge overcurrent detection does not function in the overdischarge status.

6. 0 V battery charge enabled

This function is used to recharge a battery whose voltage is 0 V due to self-discharge. When the 0 V battery charge starting charger voltage (V_{0CHA}) or a higher voltage is applied between the EB+ and EB− pins by connecting a charger, the charge control FET gate is fixed to the VDD pin voltage.
When the voltage between the gate and source of the charge control FET becomes equal to or higher than the threshold voltage due to the charger voltage, the charge control FET is turned on to start charging. At this time, the discharge control FET is off and the charging current flows through the internal parasitic diode in the discharging control FET. When the battery voltage becomes equal to or higher than V_{DL}, the S-8240A Series returns to the normal status.

Caution
1. **Some battery providers do not recommend charging for a completely self-discharged lithium-ion rechargeable battery. Please ask the battery provider to determine whether to enable or inhibit the 0 V battery charge.**
2. **The 0 V battery charge has higher priority than the charge overcurrent detection function. Consequently, a product in which use of the 0 V battery charge is enabled charges a battery forcibly and the charge overcurrent cannot be detected when the battery voltage is lower than V_{DL}.**

7. 0 V battery charge inhibited

This function inhibits recharging when a battery that is internally short-circuited (0 V battery) is connected. When the battery voltage is the 0 V battery charge inhibition battery voltage (V_{0INH}) or lower, the charge control FET gate is fixed to the EB− pin voltage to inhibit charging. When the battery voltage is V_{0INH} or higher, charging can be performed.

Caution Some battery providers do not recommend charging for a completely self-discharged lithium-ion rechargeable battery. Please ask the battery provider to determine whether to enable or inhibit the 0 V battery charge.

8. Delay circuit

The detection delay times are determined by dividing a clock of approximately 4 kHz by the counter.

Remark t_{DIOV} and t_{SHORT} start when V_{DIOV} is detected. When V_{SHORT} is detected over t_{SHORT} after V_{DIOV}, the S-8240A Series turns the discharge control FET off within t_{SHORT} from the time of detecting V_{SHORT}.

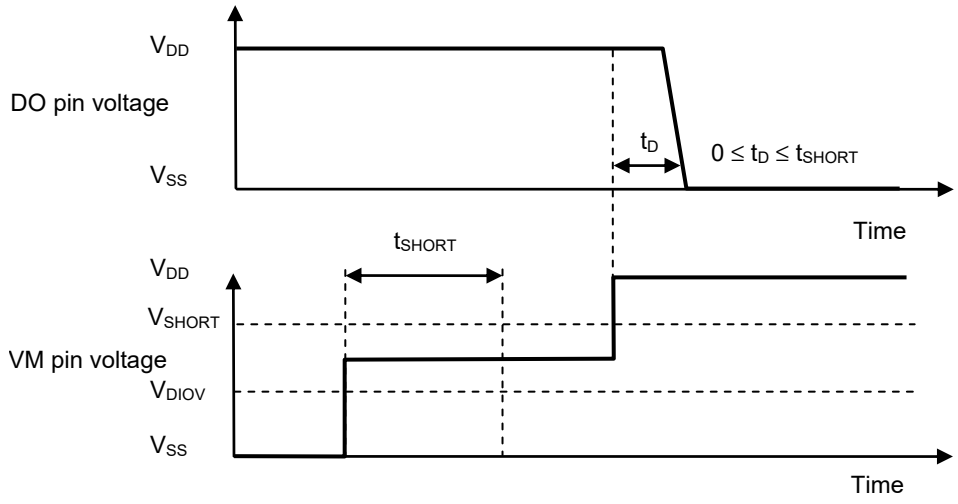

Figure 11

■ Timing Charts

1. Overcharge detection, overdischarge detection

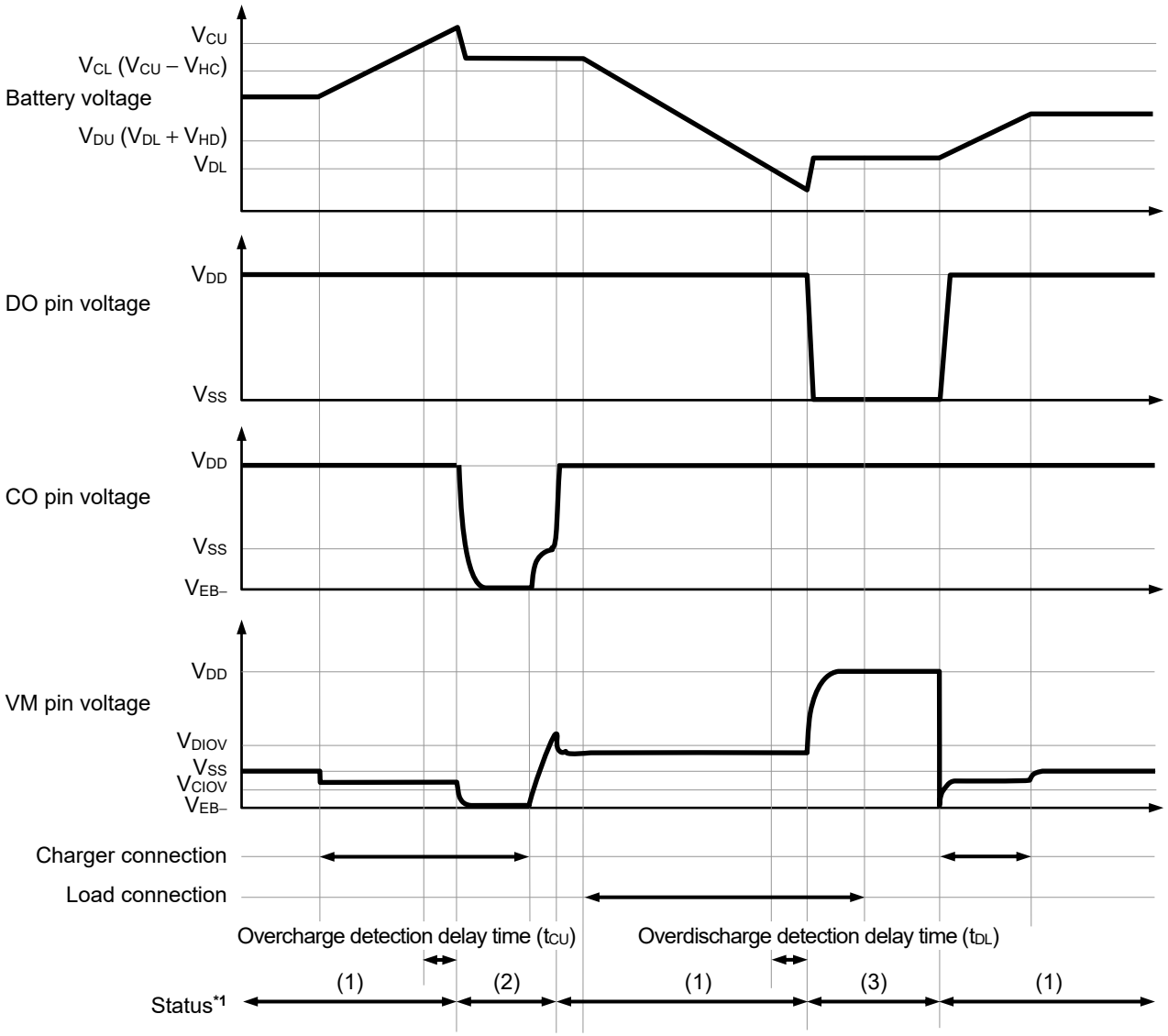

***1.** (1): Normal status
(2): Overcharge status
(3): Overdischarge status

Figure 12

2. Discharge overcurrent detection

2. 1 Release condition of discharge overcurrent status "load disconnection"

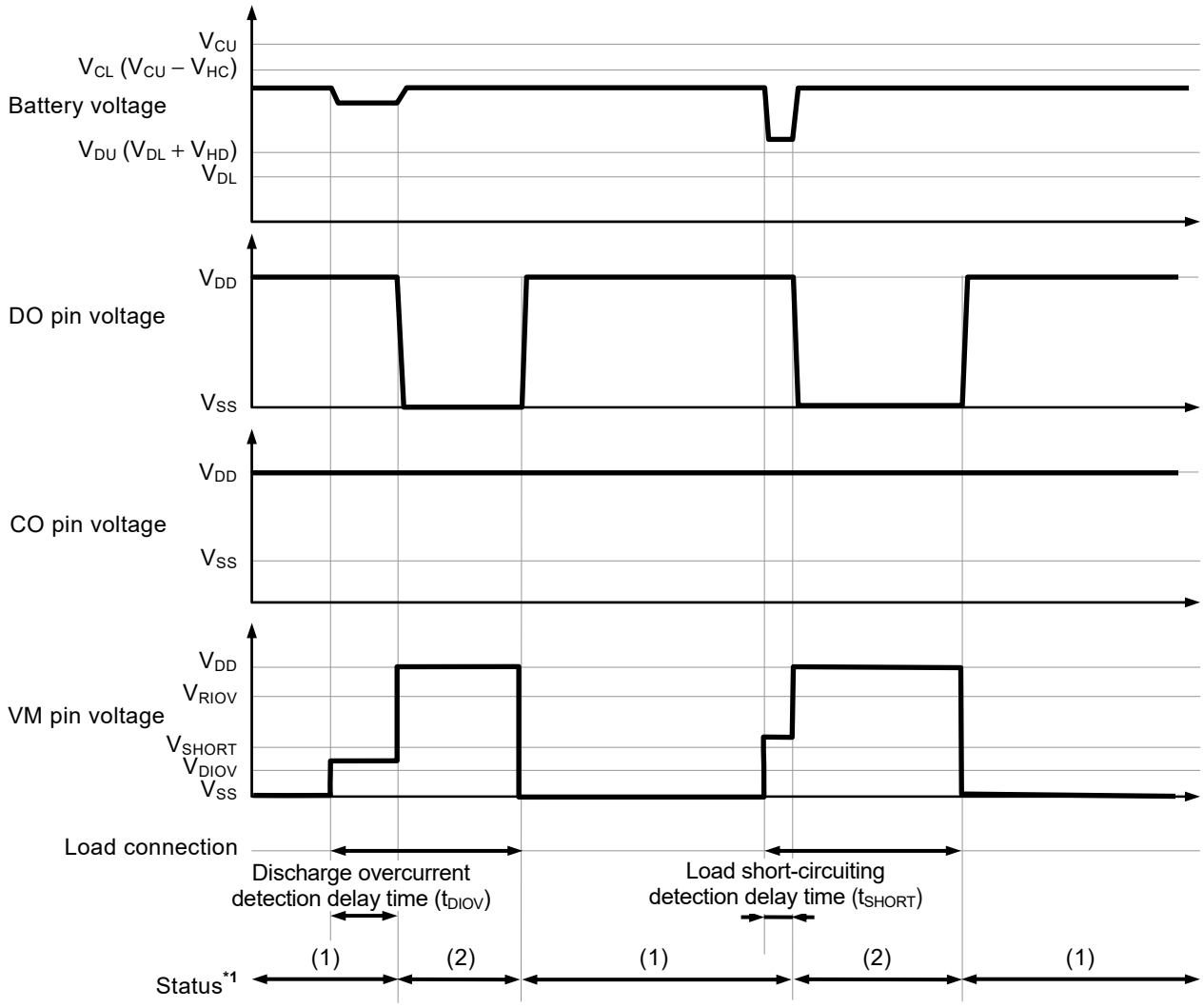

***1.** (1): Normal status
(2): Discharge overcurrent status

Figure 13

2. 2 Release condition of discharge overcurrent status "charger connection"

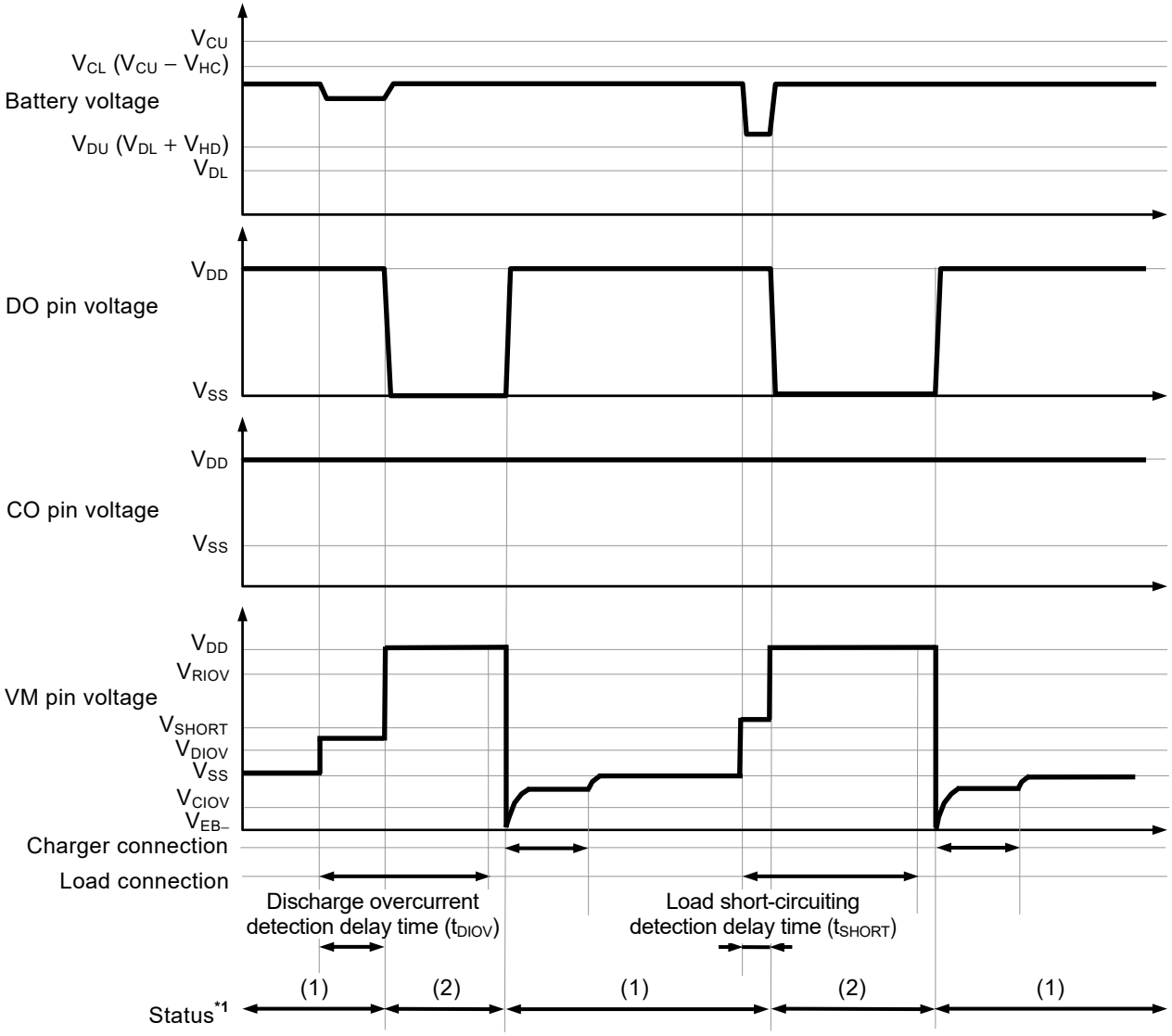

1. (1): Normal status
(2): Discharge overcurrent status

Figure 14

3. Charge overcurrent detection

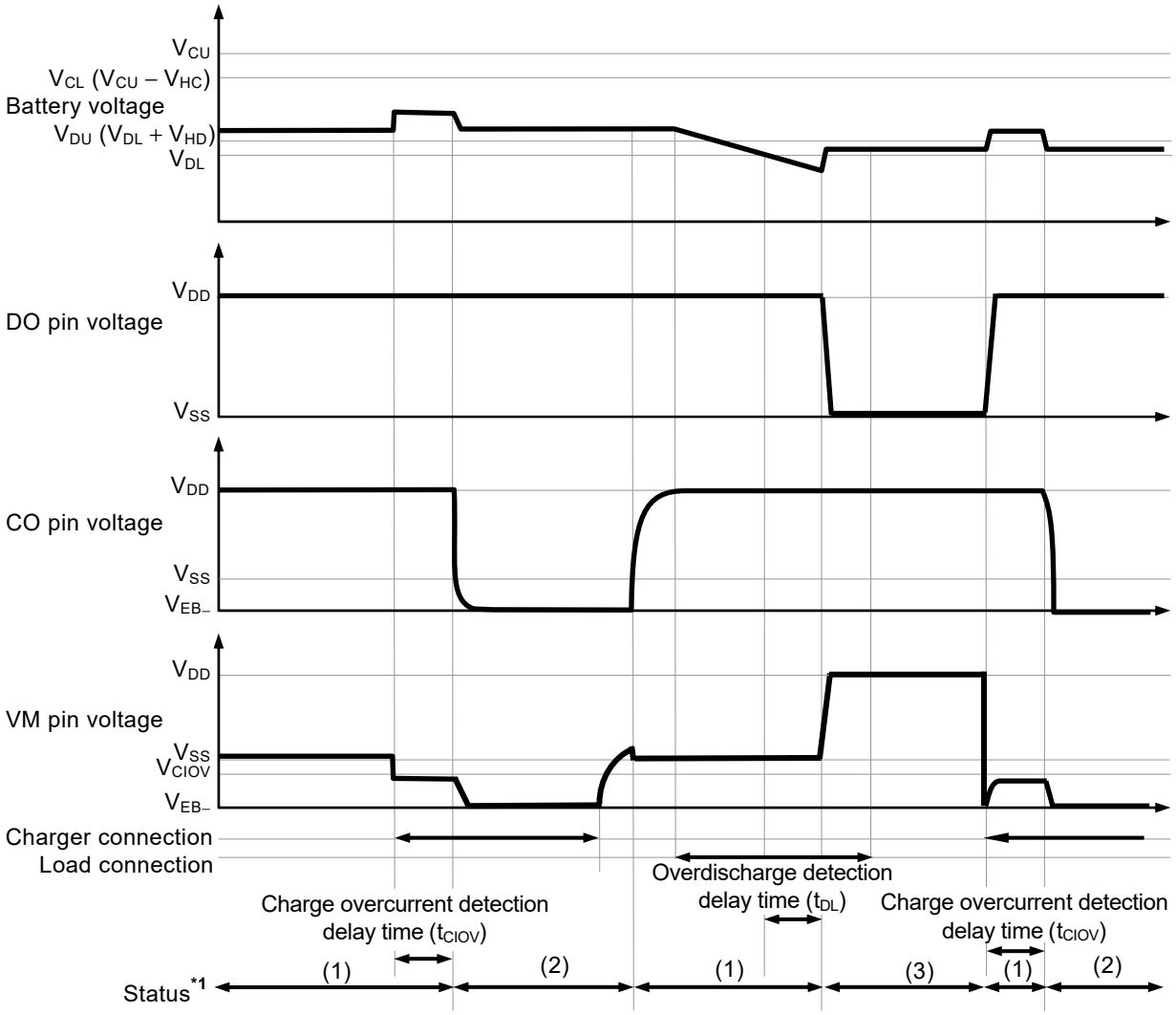

***1.** (1): Normal status
(2): Charge overcurrent status
(3): Overdischarge status

Figure 15

■ Battery Protection IC Connection Example

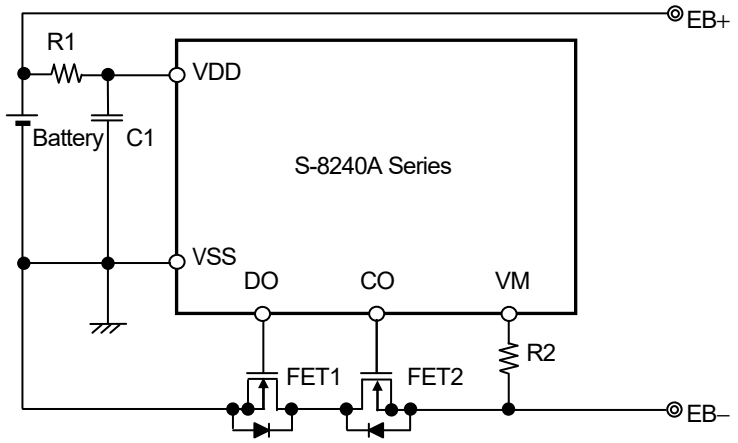

Figure 16

Table 15 Constants for External Components

Symbol	Part	Purpose	Min.	Typ.	Max.	Remark
FET1	N-channel MOS FET	Discharge control	–	–	–	Threshold voltage ≤ Overdischarge detection voltage*1
FET2	N-channel MOS FET	Charge control	–	–	–	Threshold voltage ≤ Overdischarge detection voltage*1
R1	Resistor	ESD protection, For power fluctuation	270 Ω	330 Ω	1 kΩ	–
C1	Capacitor	For power fluctuation	0.068 μF	0.1 μF	1.0 μF	Caution should be exercised when setting $V_{DIOV} \leq 20$ mV, $V_{CIOV} \geq -20$ mV.*2
R2	Resistor	ESD protection, Protection for reverse connection of a charger	300 Ω	470 Ω	4 kΩ	Caution should be exercised when an FET with a large gate capacitance is used.*3

***1.** If an FET with a threshold voltage equal to or higher than the overdischarge detection voltage is used, discharging may be stopped before overdischarge is detected.

***2.** When setting $V_{DIOV} \leq 20$ mV, $V_{CIOV} \geq -20$ mV for power fluctuation protection, the condition of $R1 \times C1 \geq 47\ \mu F \cdot \Omega$ should be met.

***3.** If an FET with a gate capacitance equal to or more than 5 nF is used, charge overcurrent detection voltage may become lower when R2 resistance is large. R2 resistance should be set to a smaller value when an FET with a gate capacitance equal to or more than 5 nF is used.

Caution 1. The constants may be changed without notice.

2. It has not been confirmed whether the operation is normal or not in circuits other than the connection example. In addition, the connection example and the constants do not guarantee proper operation. Perform thorough evaluation using the actual application to set the constants.

■ Precautions

- The application conditions for the input voltage, output voltage, and load current should not exceed the power dissipation.
- Do not apply an electrostatic discharge to this IC that exceeds the performance ratings of the built-in electrostatic protection circuit.
- ABLIC Inc. claims no responsibility for any and all disputes arising out of or in connection with any infringement by products including this IC of patents owned by a third party.

■ Characteristics (Typical Data)

1. Current consumption

1. 1 I_{OPE} vs. Ta

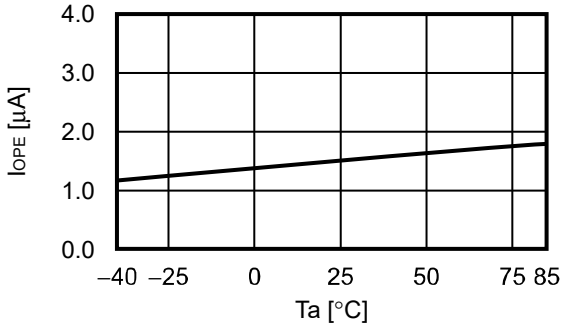

1. 2 I_{PDN} vs. Ta

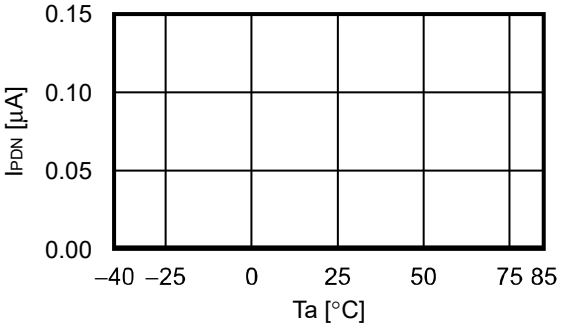

1. 3 I_{OPED} vs. Ta

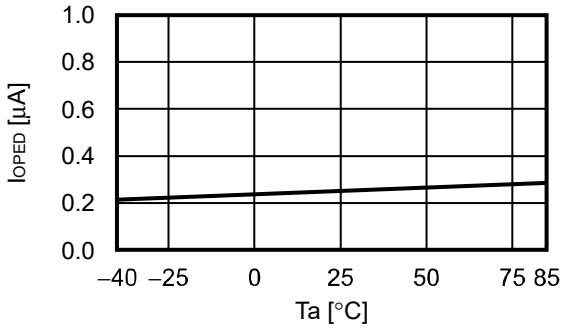

1. 4 I_{OPE} vs. V_{DD}

1. 4. 1 With power-down function

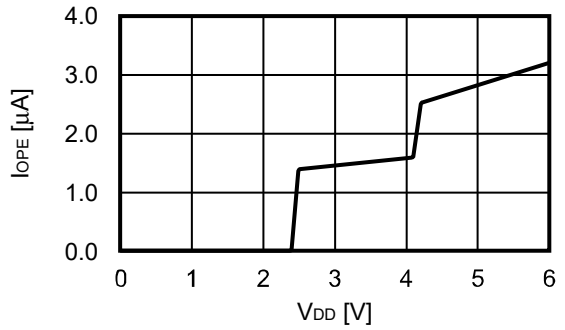

1. 4. 2 Without power-down function

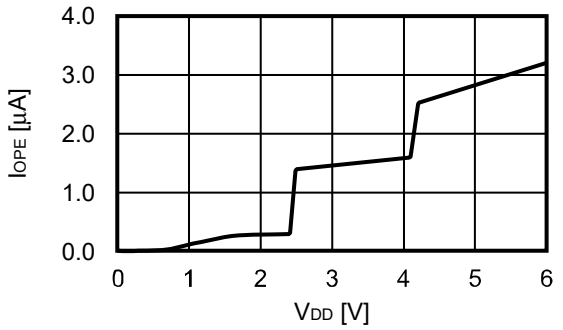

2. Detection voltage

2. 1 V_{CU} vs. Ta

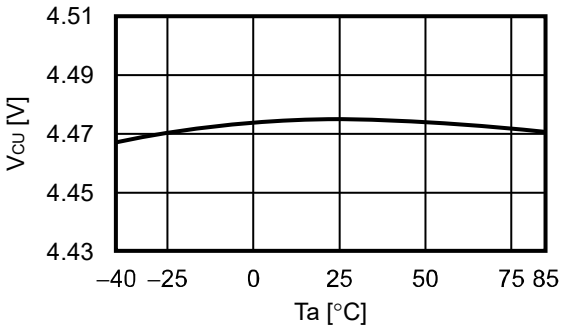

2. 2 V_{CL} vs. Ta

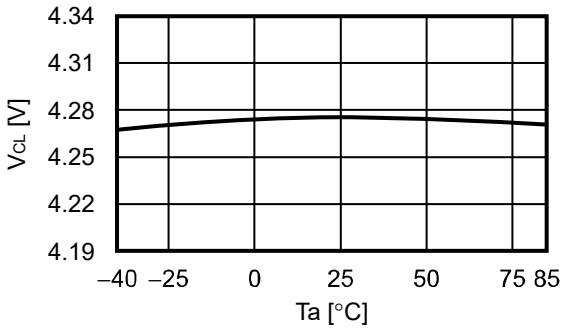

2. 3 V_{DL} vs. Ta

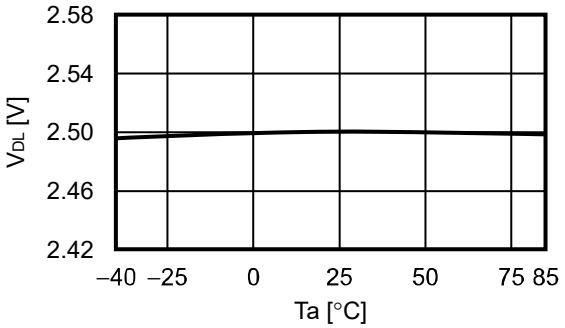

2. 4 V_{DU} vs. Ta

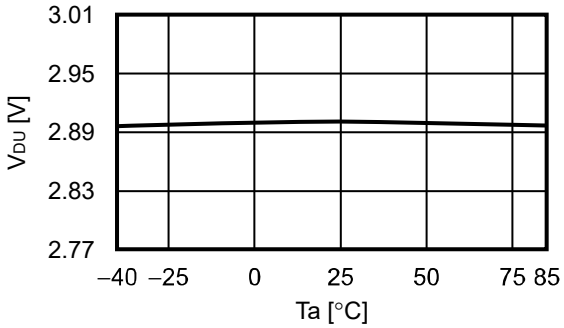

2. 5 V_{DIOV} vs. Ta

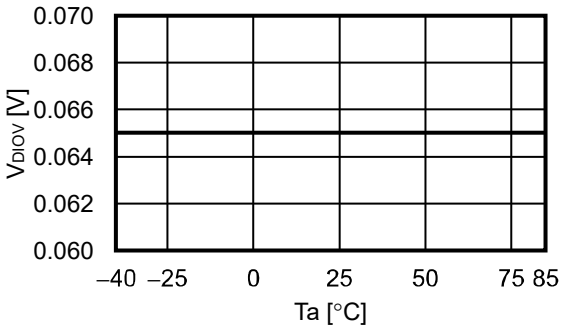

2. 6 V_{SHORT} vs. Ta

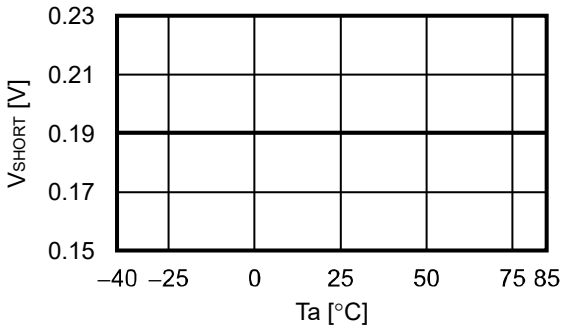

2. 7 V_{CIOV} vs. Ta

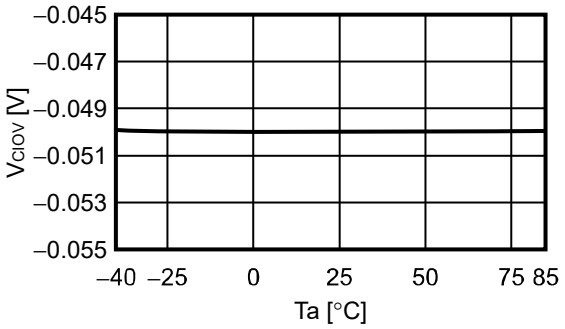

3. Delay time

3. 1 t_{CU} vs. Ta

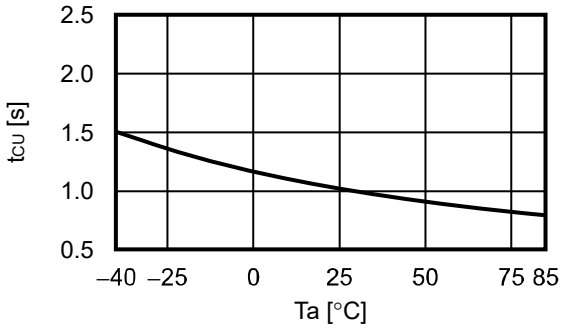

3. 2 t_{DL} vs. Ta

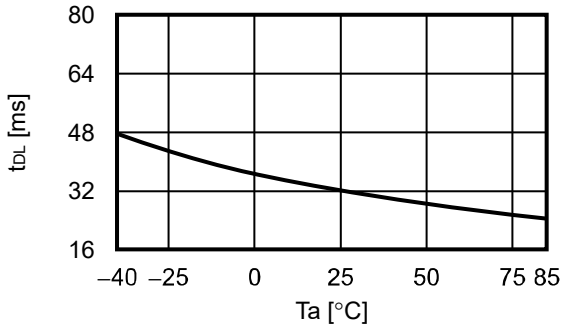

3. 3 t_{DIOV} vs. V_{DD}

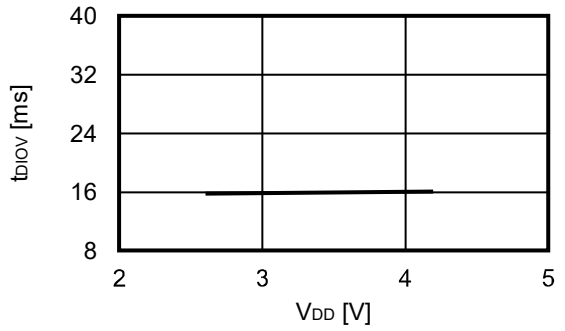

3. 4 t_{DIOV} vs. Ta

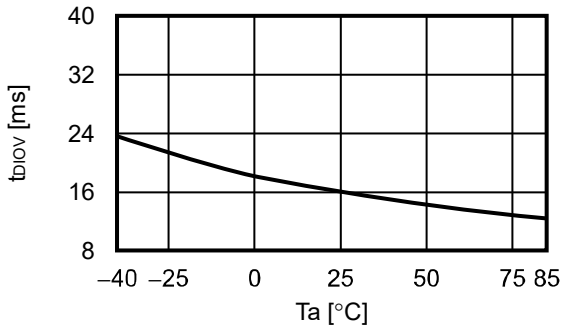

3. 5 t_{SHORT} vs. V_{DD}

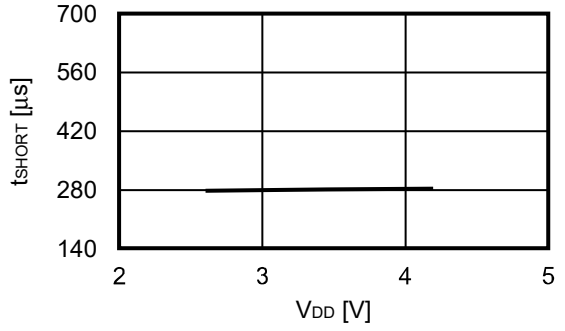

3. 6 t_{SHORT} vs. Ta

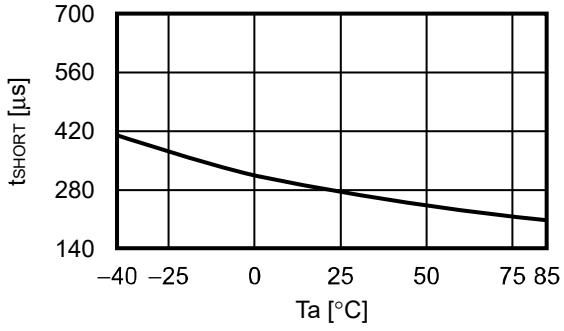

3. 7 t_{CIOV} vs. V_{DD}

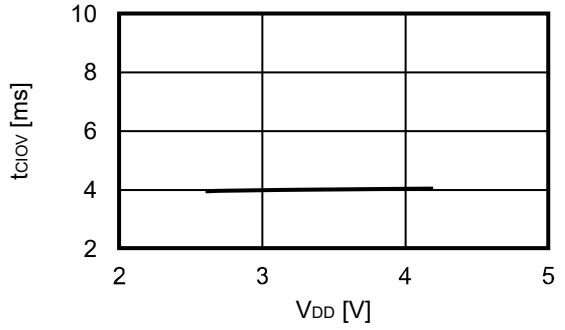

3. 8 t_{CIOV} vs. Ta

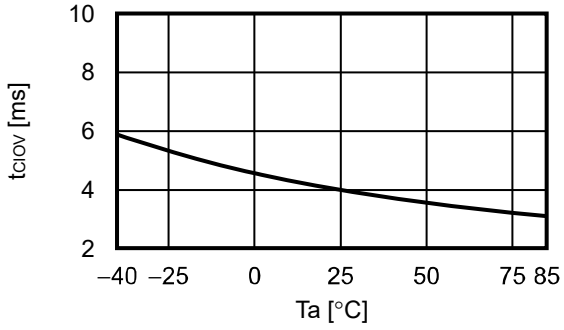

4. Output resistance

4. 1 R_{COH} vs. V_{CO}

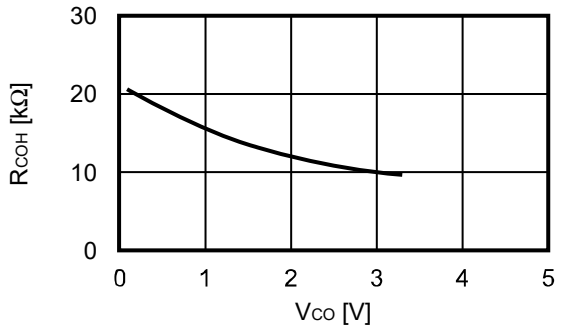

4. 2 R_{COL} vs. V_{CO}

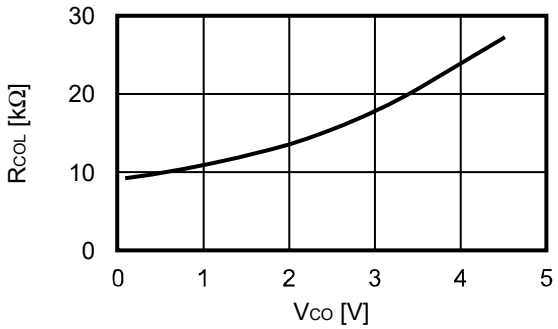

4. 3 R_{DOH} vs. V_{DO}

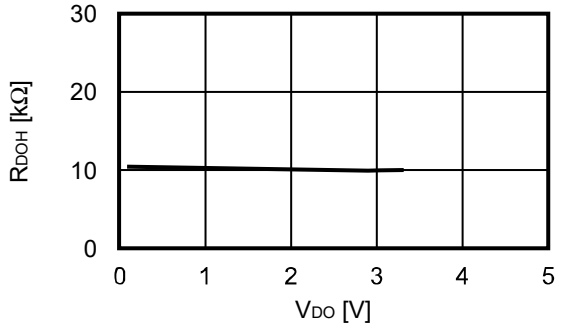

4. 4 R_{DOL} vs. V_{DO}

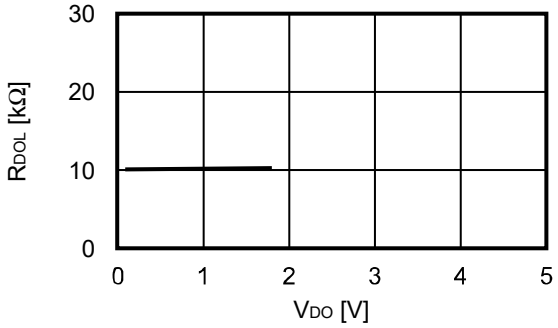

■ Marking Specifications

1. SOT-23-6

Top view

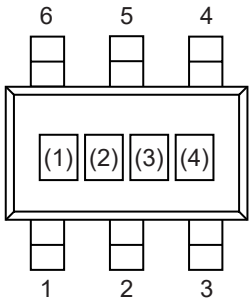

(1) to (3): Product code (refer to **Product name vs. Product code**)
(4): Lot number

Product name vs. Product code

Product Name	Product Code		
	(1)	(2)	(3)
S-8240ACS-M6T1U	5	3	S
S-8240ACT-M6T1U	5	3	T
S-8240ADQ-M6T1U	6	B	Q
S-8240ADZ-M6T1U	6	B	Z
S-8240AEA-M6T1U	8	F	A
S-8240AEH-M6T1U	8	F	H
S-8240AGJ-M6T1U	9	R	J

2. SNT-6A

Top view

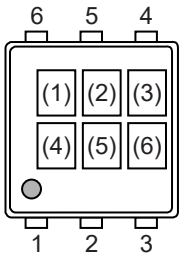

(1) to (3): Product code (refer to **Product name vs. Product code**)
(4) to (6): Lot number

Product name vs. Product code (1 / 2)

Product Name	Product Code		
	(1)	(2)	(3)
S-8240AAB-I6T1U	4	7	B
S-8240AAC-I6T1U	4	7	C
S-8240AAD-I6T1U	4	7	D
S-8240AAE-I6T1U	4	7	E
S-8240AAF-I6T1U	4	7	F
S-8240AAG-I6T1U	4	7	G
S-8240AAH-I6T1U	4	7	H
S-8240AAI-I6T1U	4	7	I
S-8240AAJ-I6T1U	4	7	J
S-8240AAK-I6T1U	4	7	K
S-8240AAL-I6T1U	4	7	L
S-8240AAM-I6T1U	4	7	M
S-8240AAN-I6T1U	4	7	N
S-8240AAQ-I6T1U	4	7	Q
S-8240AAR-I6T1U	4	7	R
S-8240AAS-I6T1U	4	7	S
S-8240AAT-I6T1U	4	7	T
S-8240AAU-I6T1U	4	7	U
S-8240AAV-I6T1U	4	7	V
S-8240AAW-I6T1U	4	7	W
S-8240AAX-I6T1U	4	7	X
S-8240AAY-I6T1U	4	7	Y
S-8240AAZ-I6T1U	4	7	Z
S-8240ABA-I6T1U	4	8	A
S-8240ABB-I6T1U	4	8	B
S-8240ABC-I6T1U	4	8	C
S-8240ABD-I6T1U	4	8	D
S-8240ABE-I6T1U	4	8	E
S-8240ABF-I6T1U	4	8	F
S-8240ABG-I6T1U	4	8	G
S-8240ABH-I6T1U	4	8	H
S-8240ABI-I6T1U	4	8	I
S-8240ABJ-I6T1U	4	8	J
S-8240ABK-I6T1U	4	8	K
S-8240ABL-I6T1U	4	8	L
S-8240ABM-I6T1U	4	8	M

Product Name	Product Code		
	(1)	(2)	(3)
S-8240ABN-I6T1U	4	8	N
S-8240ABO-I6T1U	4	8	O
S-8240ABQ-I6T1U	4	8	Q
S-8240ABR-I6T1U	4	8	R
S-8240ABU-I6T1U	4	8	U
S-8240ABV-I6T1U	4	8	V
S-8240ABW-I6T1U	4	8	W
S-8240ABX-I6T1U	4	8	X
S-8240ACB-I6T1U	5	3	B
S-8240ACC-I6T1U	5	3	C
S-8240ACE-I6T1U	5	3	E
S-8240ACF-I6T1U	5	3	F
S-8240ACG-I6T1U	5	3	G
S-8240ACH-I6T1U	5	3	H
S-8240ACI-I6T1U	5	3	I
S-8240ACJ-I6T1U	5	3	J
S-8240ACK-I6T1U	5	3	K
S-8240ACL-I6T1U	5	3	L
S-8240ACN-I6T1U	5	3	N
S-8240ACO-I6T1U	5	3	O
S-8240ACP-I6T1U	5	3	P
S-8240ACR-I6T1U	5	3	R
S-8240ACU-I6T1U	5	3	U
S-8240ACV-I6T1U	5	3	V
S-8240ACW-I6T1U	5	3	W
S-8240ACY-I6T1U	5	3	Y
S-8240ADB-I6T1U	6	B	B
S-8240ADC-I6T1U	6	B	C
S-8240ADF-I6T1U	6	B	F
S-8240ADG-I6T1U	6	B	G
S-8240ADH-I6T1U	6	B	H
S-8240ADJ-I6T1U	6	B	J
S-8240ADK-I6T1U	6	B	K
S-8240ADM-I6T1U	6	B	M
S-8240ADO-I6T1U	6	B	O
S-8240ADS-I6T1U	6	B	S

Product name vs. Product code (2 / 2)

Product Name	Product Code		
	(1)	(2)	(3)
S-8240ADU-I6T1U	6	B	U
S-8240ADV-I6T1U	6	B	V
S-8240ADW-I6T1U	6	B	W
S-8240ADX-I6T1U	6	B	X
S-8240ADZ-I6T1U	6	B	Z
S-8240AEA-I6T1U	8	F	A
S-8240AEC-I6T1U	8	F	C
S-8240AED-I6T1U	8	F	D
S-8240AEE-I6T1U	8	F	E
S-8240AEF-I6T1U	8	F	F
S-8240AEG-I6T1U	8	F	G
S-8240AEI-I6T1U	8	F	I
S-8240AEJ-I6T1U	8	F	J
S-8240AEM-I6T1U	8	F	M
S-8240AEN-I6T1U	8	F	N
S-8240AEO-I6T1U	8	F	O
S-8240AEP-I6T1U	8	F	P
S-8240AEQ-I6T1U	8	F	Q
S-8240AER-I6T1U	8	F	R
S-8240AET-I6T1U	8	F	T
S-8240AEU-I6T1U	8	F	U
S-8240AEV-I6T1U	8	F	V
S-8240AEW-I6T1U	8	F	W
S-8240AEY-I6T1U	8	F	Y
S-8240AEZ-I6T1U	8	F	Z
S-8240AFA-I6T1U	8	G	A
S-8240AFD-I6T1U	8	G	D
S-8240AFH-I6T1U	8	G	H
S-8240AFI-I6T1U	8	G	I
S-8240AFK-I6T1U	8	G	K
S-8240AFL-I6T1U	8	G	L
S-8240AFM-I6T1U	8	G	M
S-8240AFP-I6T1U	8	G	P
S-8240AFR-I6T1U	8	G	R
S-8240AFS-I6T1U	8	G	S
S-8240AFT-I6T1U	8	G	T
S-8240AFV-I6T1U	8	G	V
S-8240AFW-I6T1U	8	G	W
S-8240AGD-I6T1U	9	R	D
S-8240AGH-I6T1U	9	R	H
S-8240AGI-I6T1U	9	R	I

3. HSNT-6(1212)

Top view

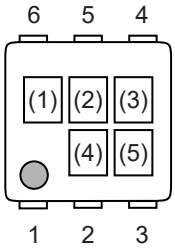

(1) to (3): Product code (refer to **Product name vs. Product code**)
(4), (5): Lot number

Product name vs. Product code

Product Name	Product Code		
	(1)	(2)	(3)
S-8240AAC-A6T2U	4	7	C
S-8240AAD-A6T2U	4	7	D
S-8240ABO-A6T2U	4	8	O
S-8240ABR-A6T2U	4	8	R
S-8240ACE-A6T2U	5	3	E
S-8240ADA-A6T2U	6	B	A
S-8240ADI-A6T2U	6	B	I
S-8240ADN-A6T2U	6	B	N
S-8240ADP-A6T2U	6	B	P
S-8240ADT-A6T2U	6	B	T
S-8240AEK-A6T2U	8	F	K
S-8240AEL-A6T2U	8	F	L
S-8240AES-A6T2U	8	F	S
S-8240AEX-A6T2U	8	F	X
S-8240AFB-A6T2U	8	G	B
S-8240AFC-A6T2U	8	G	C

Product Name	Product Code		
	(1)	(2)	(3)
S-8240AFE-A6T2U	8	G	E
S-8240AFF-A6T2U	8	G	F
S-8240AFG-A6T2U	8	G	G
S-8240AFN-A6T2U	8	G	N
S-8240AFO-A6T2U	8	G	O
S-8240AFQ-A6T2U	8	G	Q
S-8240AFU-A6T2U	8	G	U
S-8240AFX-A6T2U	8	G	X
S-8240AFZ-A6T2U	8	G	Z
S-8240AGA-A6T2U	9	R	A
S-8240AGB-A6T2U	9	R	B
S-8240AGE-A6T2U	9	R	E
S-8240AGG-A6T2U	9	R	G
S-8240AGK-A6T2U	9	R	K

■ Power Dissipation

SOT-23-6

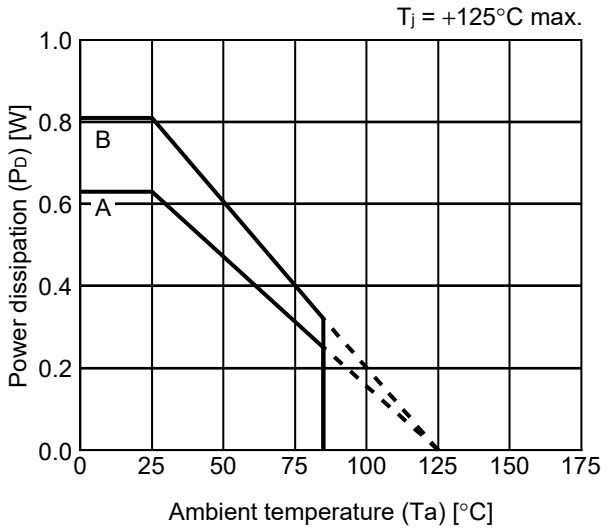

Board	Power Dissipation (P_D)
A	0.63 W
B	0.81 W
C	–
D	–
E	–

SNT-6A

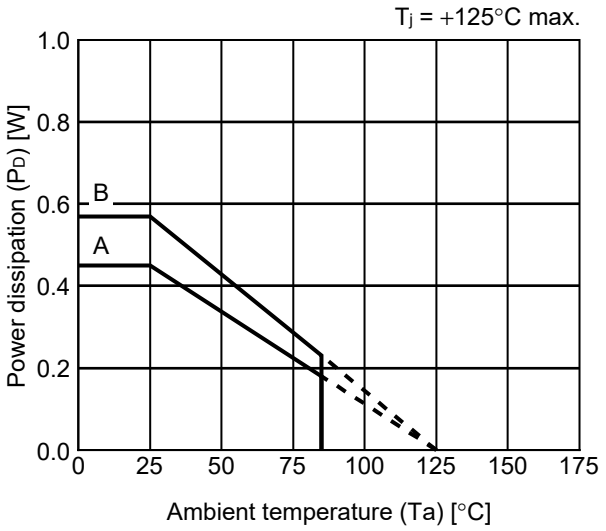

Board	Power Dissipation (P_D)
A	0.45 W
B	0.57W
C	–
D	–
E	–

HSNT-6(1212)

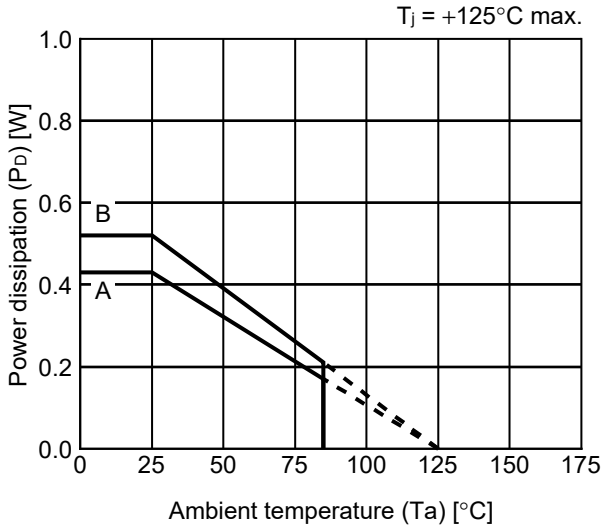

Board	Power Dissipation (P_D)
A	0.43 W
B	0.52 W
C	–
D	–
E	–

SOT-23-3/3S/5/6 Test Board

IC Mount Area

(1) Board A

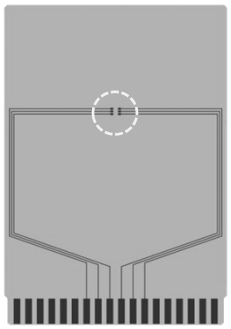

Item		Specification
Size [mm]		114.3 x 76.2 x t1.6
Material		FR-4
Number of copper foil layer		2
Copper foil layer [mm]	1	Land pattern and wiring for testing: t0.070
	2	-
	3	-
	4	74.2 x 74.2 x t0.070
Thermal via		-

(2) Board B

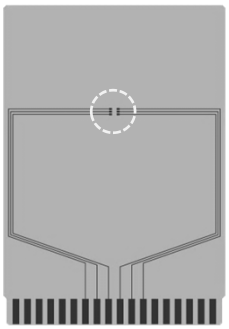

Item		Specification
Size [mm]		114.3 x 76.2 x t1.6
Material		FR-4
Number of copper foil layer		4
Copper foil layer [mm]	1	Land pattern and wiring for testing: t0.070
	2	74.2 x 74.2 x t0.035
	3	74.2 x 74.2 x t0.035
	4	74.2 x 74.2 x t0.070
Thermal via		-

No. SOT23x-A-Board-SD-2.0

SNT-6A Test Board

(1) Board A

IC Mount Area

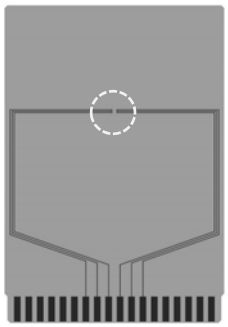

Item		Specification
Size [mm]		114.3 x 76.2 x t1.6
Material		FR-4
Number of copper foil layer		2
Copper foil layer [mm]	1	Land pattern and wiring for testing: t0.070
	2	-
	3	-
	4	74.2 x 74.2 x t0.070
Thermal via		-

(2) Board B

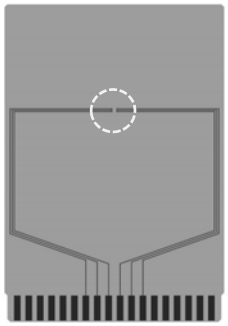

Item		Specification
Size [mm]		114.3 x 76.2 x t1.6
Material		FR-4
Number of copper foil layer		4
Copper foil layer [mm]	1	Land pattern and wiring for testing: t0.070
	2	74.2 x 74.2 x t0.035
	3	74.2 x 74.2 x t0.035
	4	74.2 x 74.2 x t0.070
Thermal via		-

No. SNT6A-A-Board-SD-1.0

HSNT-6(1212) Test Board

IC Mount Area

(1) Board A

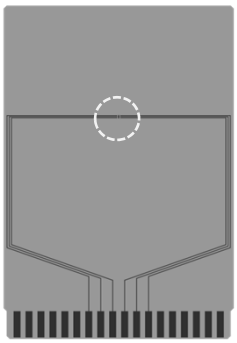

Item		Specification
Size [mm]		114.3 x 76.2 x t1.6
Material		FR-4
Number of copper foil layer		2
Copper foil layer [mm]	1	Land pattern and wiring for testing: t0.070
	2	-
	3	-
	4	74.2 x 74.2 x t0.070
Thermal via		-

(2) Board B

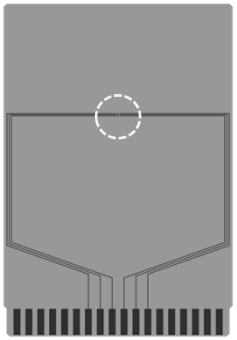

Item		Specification
Size [mm]		114.3 x 76.2 x t1.6
Material		FR-4
Number of copper foil layer		4
Copper foil layer [mm]	1	Land pattern and wiring for testing: t0.070
	2	74.2 x 74.2 x t0.035
	3	74.2 x 74.2 x t0.035
	4	74.2 x 74.2 x t0.070
Thermal via		-

No. HSNT6-A-Board-SD-1.0

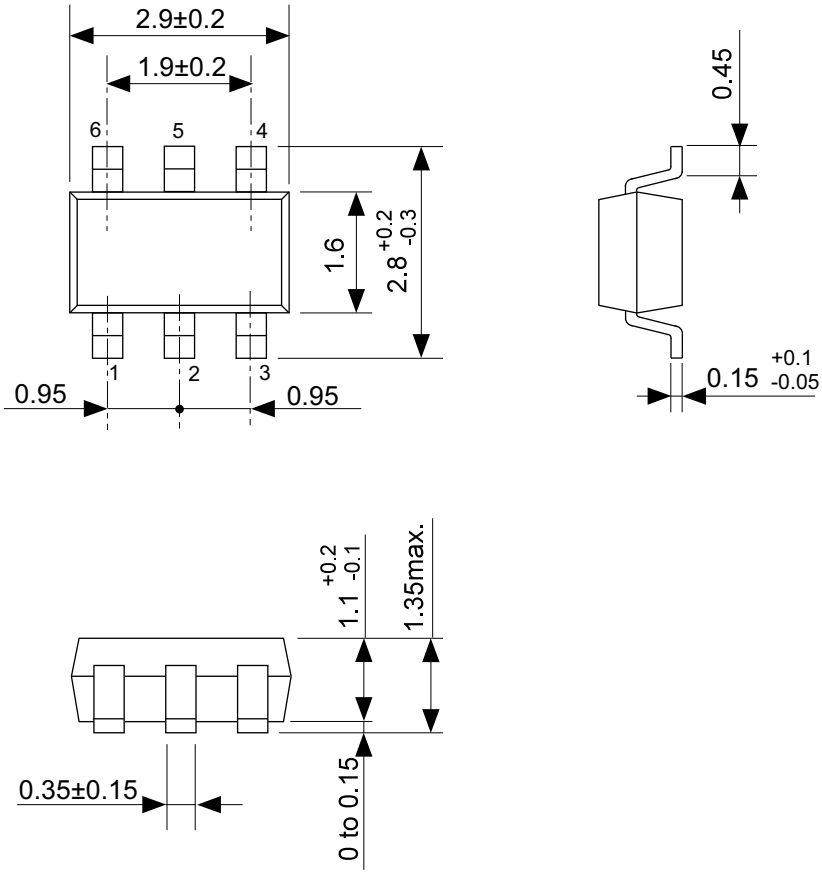

No. MP006-A-P-SD-2.1

TITLE	SOT236-A-PKG Dimensions
No.	MP006-A-P-SD-2.1
ANGLE	
UNIT	mm

ABLIC Inc.

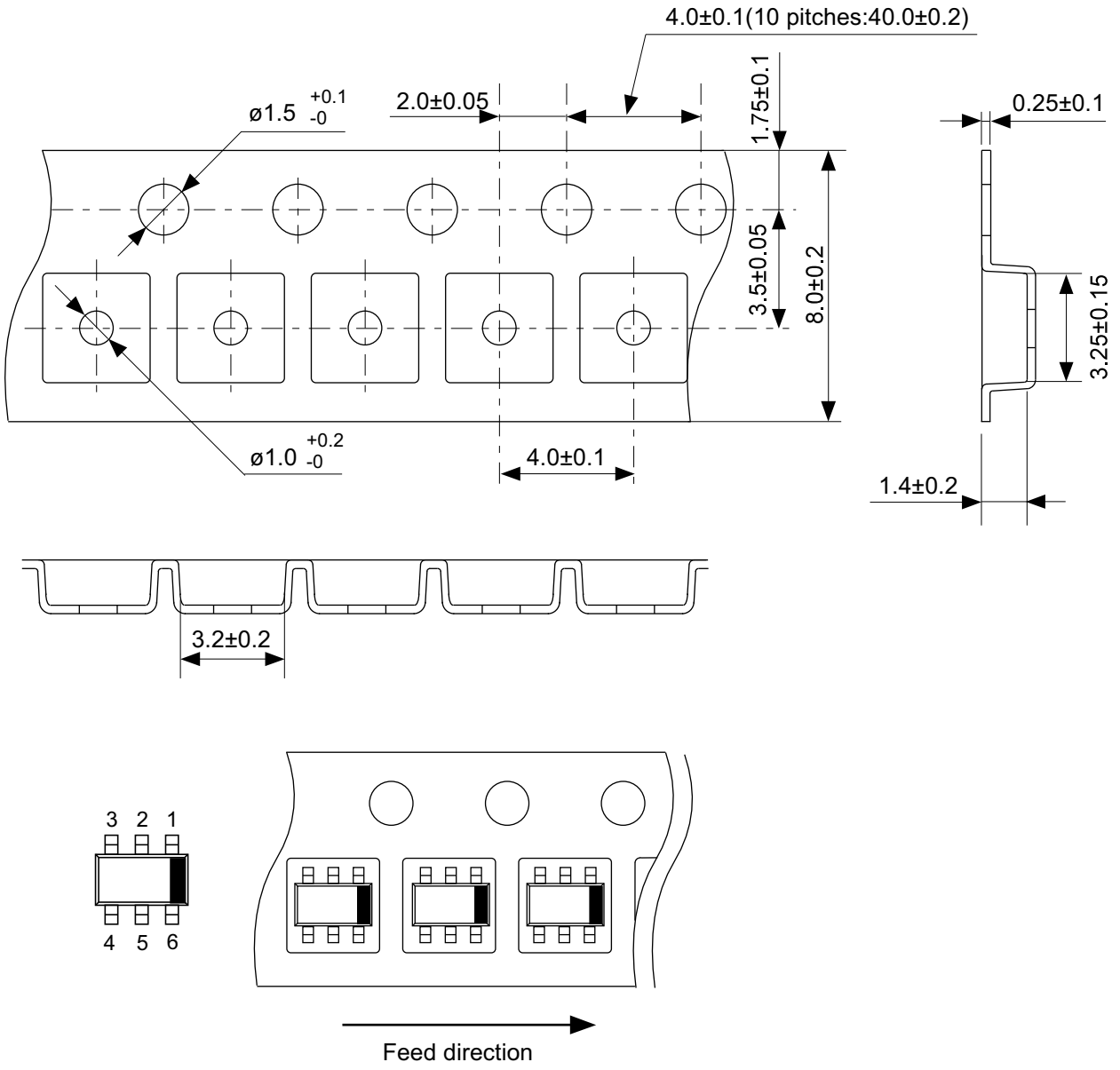

No. MP006-A-C-SD-3.1

TITLE	SOT236-A-Carrier Tape
No.	MP006-A-C-SD-3.1
ANGLE	
UNIT	mm
ABLIC Inc.	

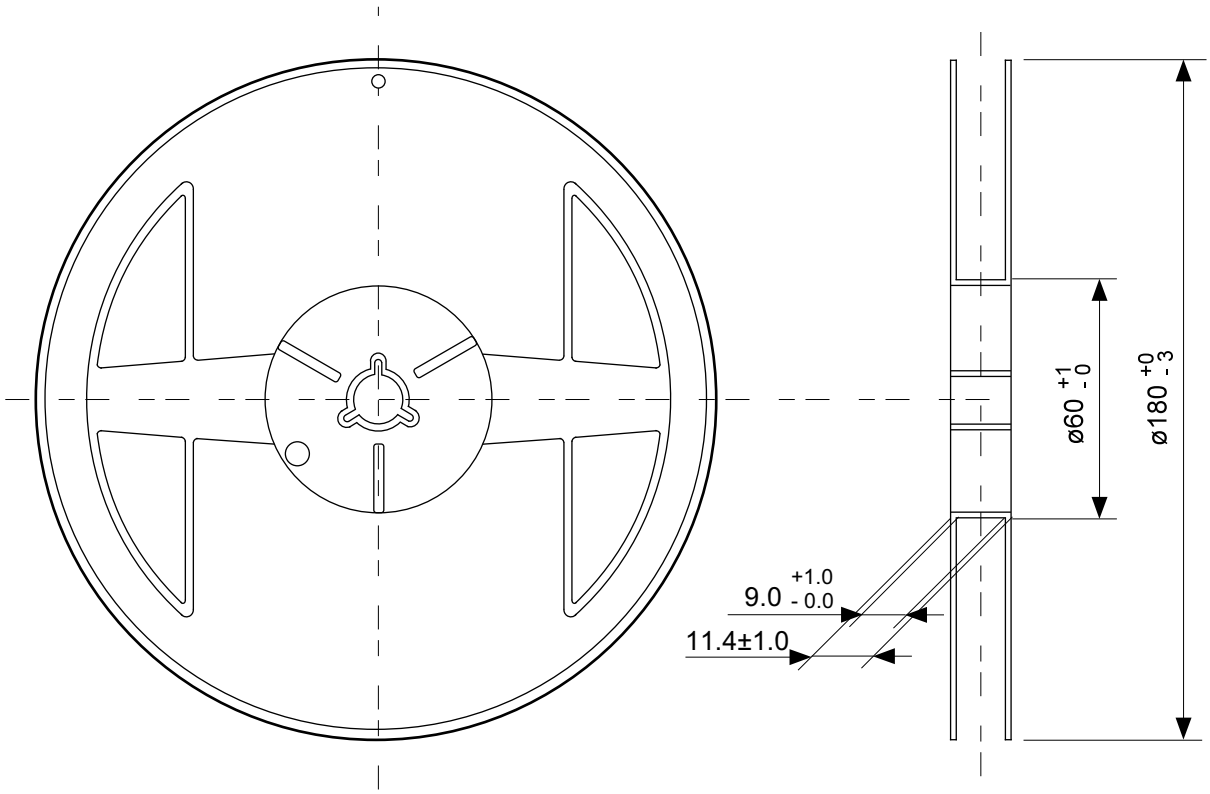

Enlarged drawing in the central part

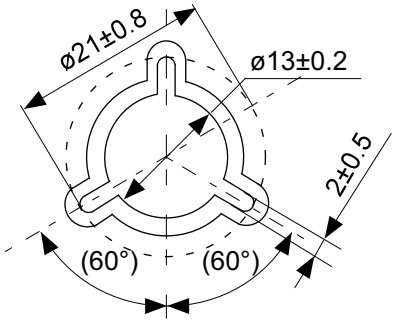

No. MP006-A-R-SD-3.0

TITLE	SOT236-A-Reel		
No.	MP006-A-R-SD-3.0		
ANGLE		QTY	3,000
UNIT	mm		
ABLIC Inc.			

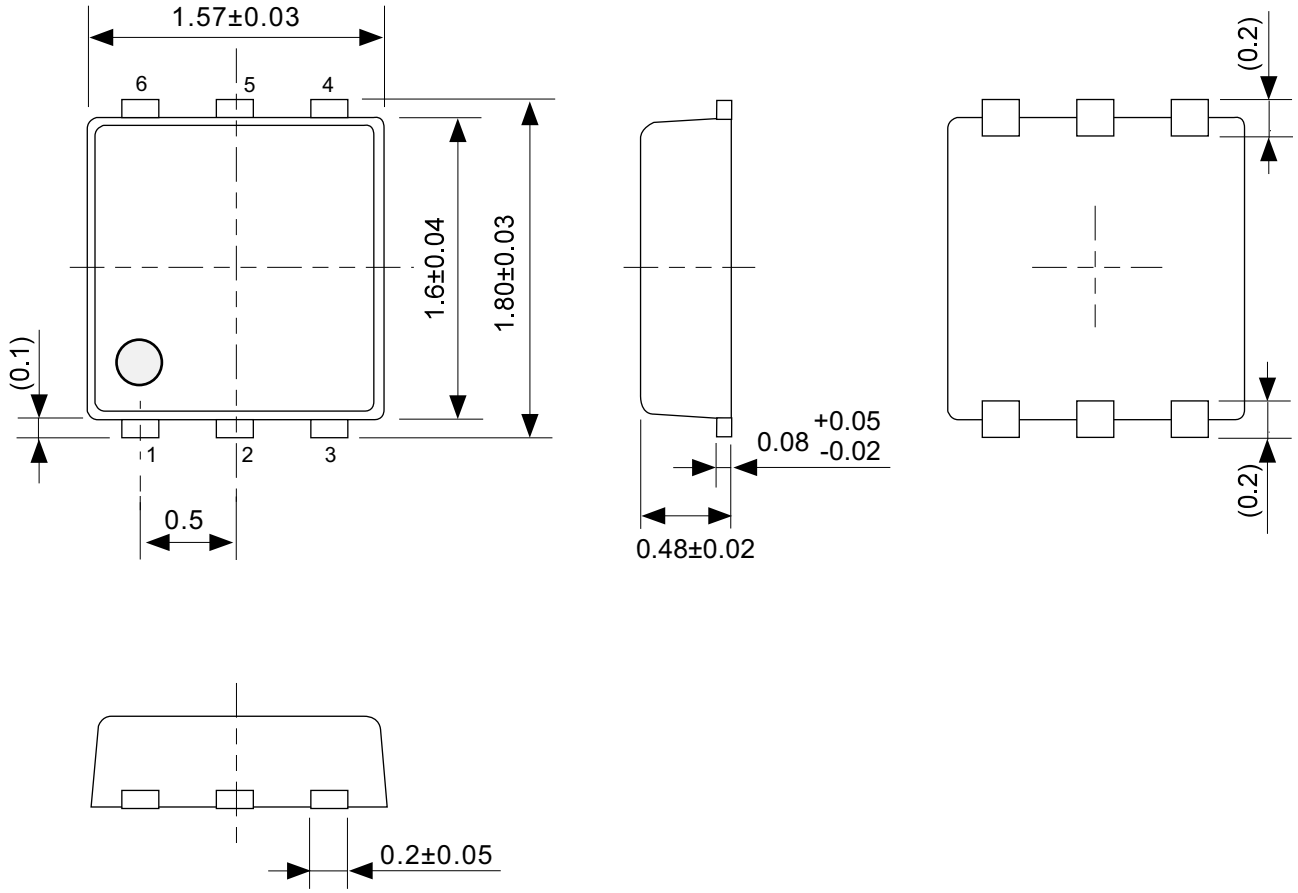

No. PG006-A-P-SD-2.1

TITLE	SNT-6A-A-PKG Dimensions
No.	PG006-A-P-SD-2.1
ANGLE	
UNIT	mm
ABLIC Inc.	

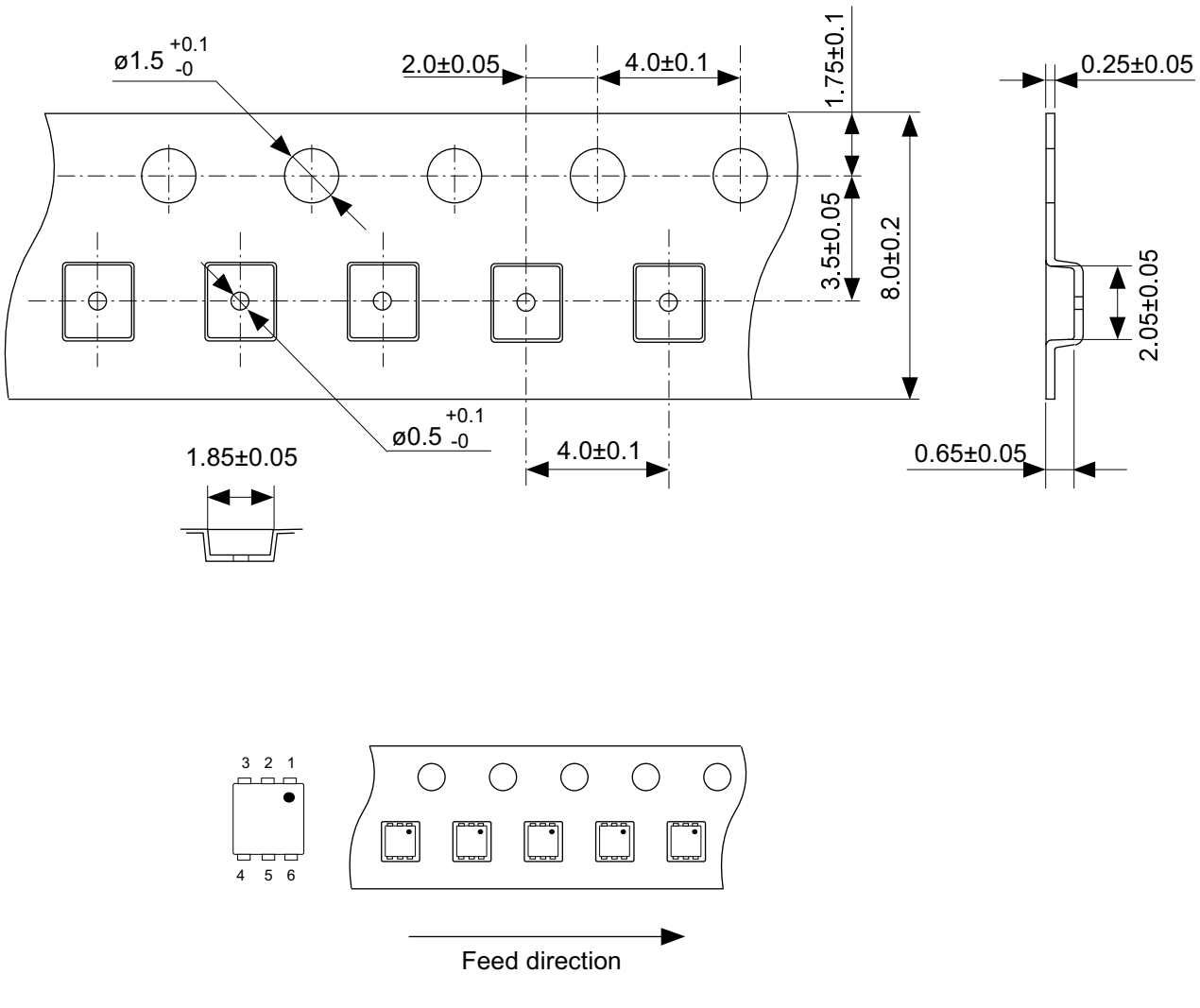

No. PG006-A-C-SD-2.0

TITLE	SNT-6A-A-Carrier Tape
No.	PG006-A-C-SD-2.0
ANGLE	
UNIT	mm
ABLIC Inc.	

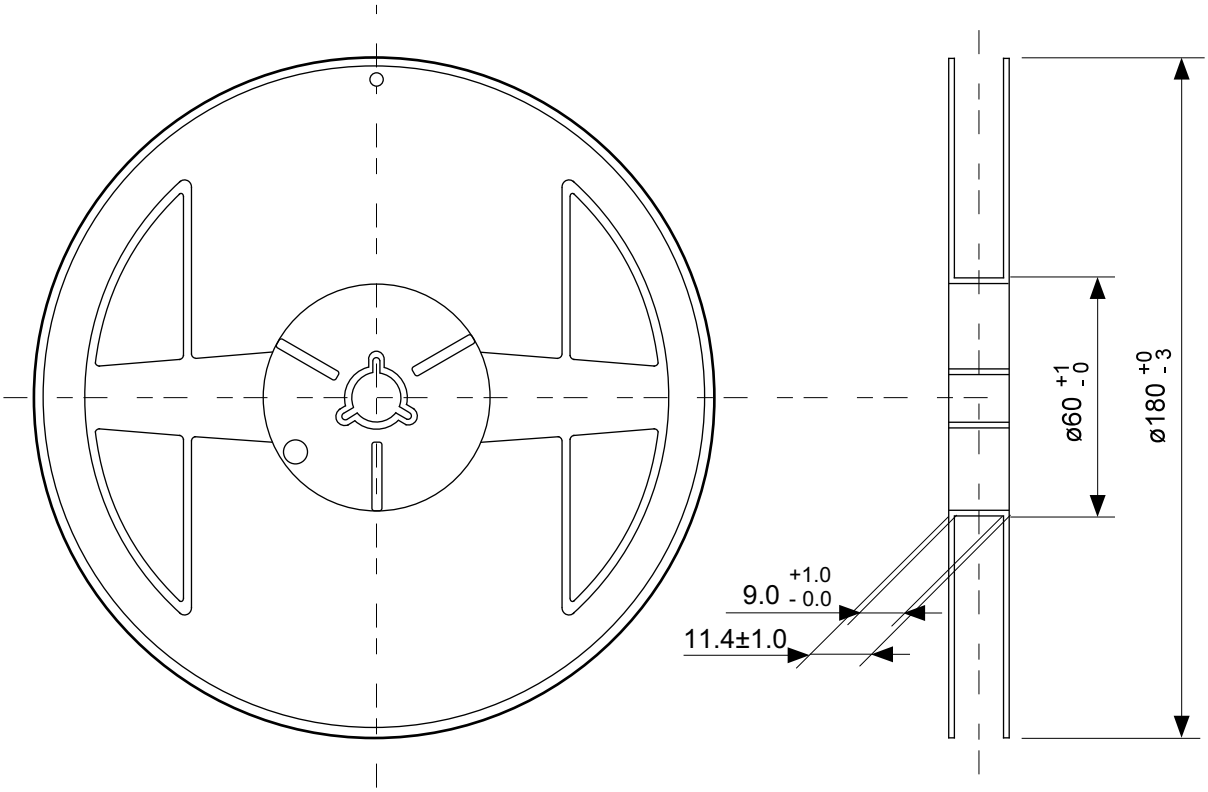

Enlarged drawing in the central part

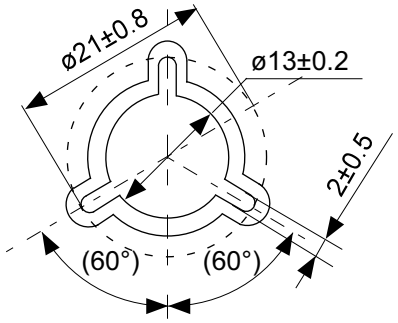

No. PG006-A-R-SD-2.0

TITLE	SNT-6A-A-Reel		
No.	PG006-A-R-SD-2.0		
ANGLE		QTY.	5,000
UNIT	mm		
ABLIC Inc.			

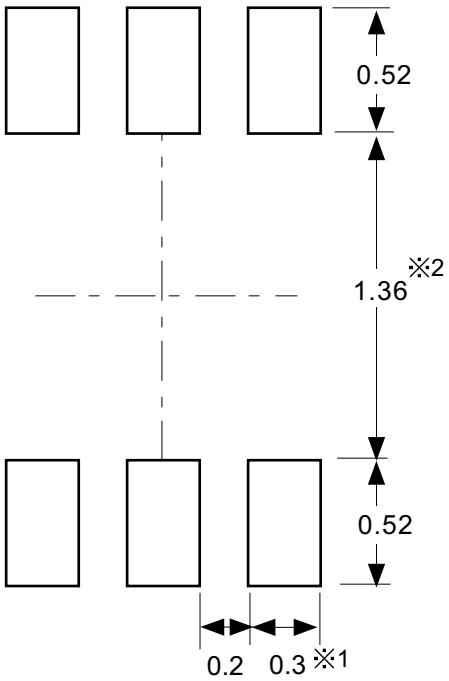

※1. ランドパターンの幅に注意してください (0.25 mm min. / 0.30 mm typ.)。
※2. パッケージ中央にランドパターンを広げないでください (1.30 mm ~ 1.40 mm)。

注意 1. パッケージのモールド樹脂下にシルク印刷やハンダ印刷などしないでください。
2. パッケージ下の配線上のソルダーレジストなどの厚みをランドパターン表面から0.03 mm 以下にしてください。
3. マスク開口サイズと開口位置はランドパターンと合わせてください。
4. 詳細は〝SNTパッケージ活用の手引き〟を参照してください。

※1. Pay attention to the land pattern width (0.25 mm min. / 0.30 mm typ.).
※2. Do not widen the land pattern to the center of the package (1.30 mm ~ 1.40 mm).

Caution 1. Do not do silkscreen printing and solder printing under the mold resin of the package.
2. The thickness of the solder resist on the wire pattern under the package should be 0.03 mm or less from the land pattern surface.
3. Match the mask aperture size and aperture position with the land pattern.
4. Refer to "SNT Package User's Guide" for details.

※1. 请注意焊盘模式的宽度 (0.25 mm min. / 0.30 mm typ.)。
※2. 请勿向封装中间扩展焊盘模式 (1.30 mm ~ 1.40 mm)。

注意 1. 请勿在树脂型封装的下面印刷丝网、焊锡。
2. 在封装下、布线上的阻焊膜厚度 (从焊盘模式表面起) 请控制在 0.03 mm 以下。
3. 钢网的开口尺寸和开口位置请与焊盘模式对齐。
4. 详细内容请参阅 "SNT 封装的应用指南"。

No. PG006-A-L-SD-4.1

TITLE	SNT-6A-A -Land Recommendation
No.	PG006-A-L-SD-4.1
ANGLE	
UNIT	mm
ABLIC Inc.	

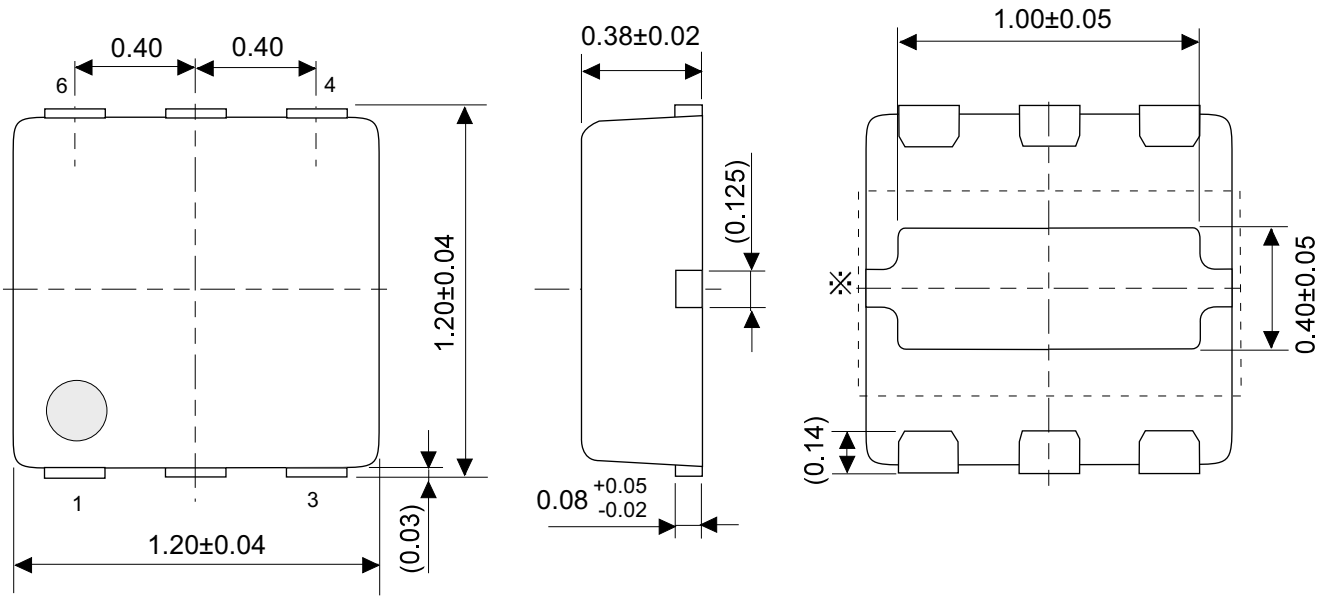

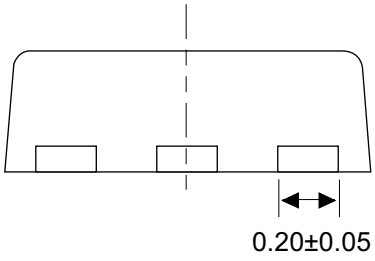

※ The heat sink of back side has different electric potential depending on the product.
Confirm specifications of each product.
Do not use it as the function of electrode.

No. PM006-A-P-SD-1.1

TITLE	HSNT-6-B-PKG Dimensions
No.	PM006-A-P-SD-1.1
ANGLE	
UNIT	mm

ABLIC Inc.

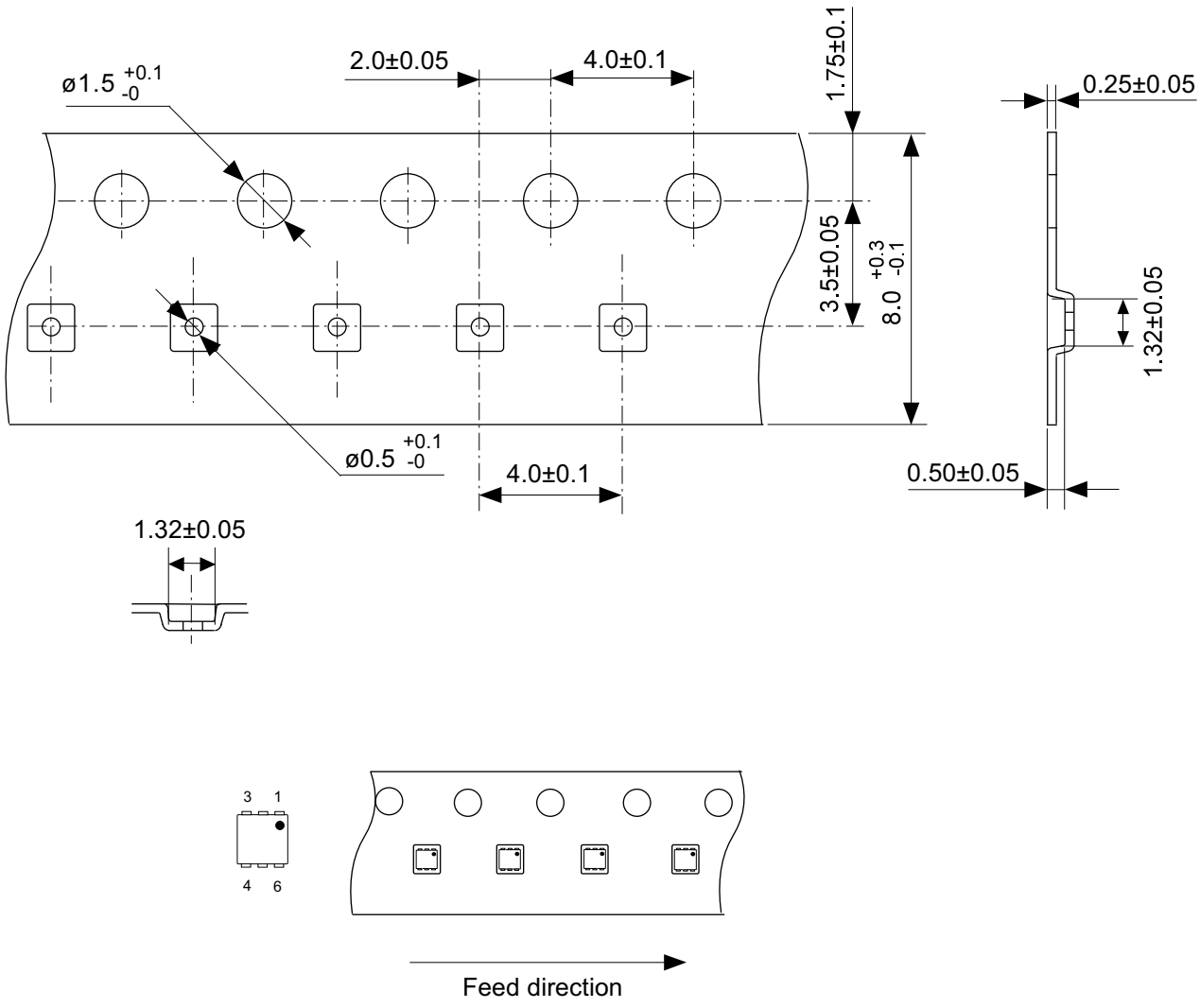

No. PM006-A-C-SD-2.0

TITLE	HSNT-6-B-Carrier Tape
No.	PM006-A-C-SD-2.0
ANGLE	
UNIT	mm
ABLIC Inc.	

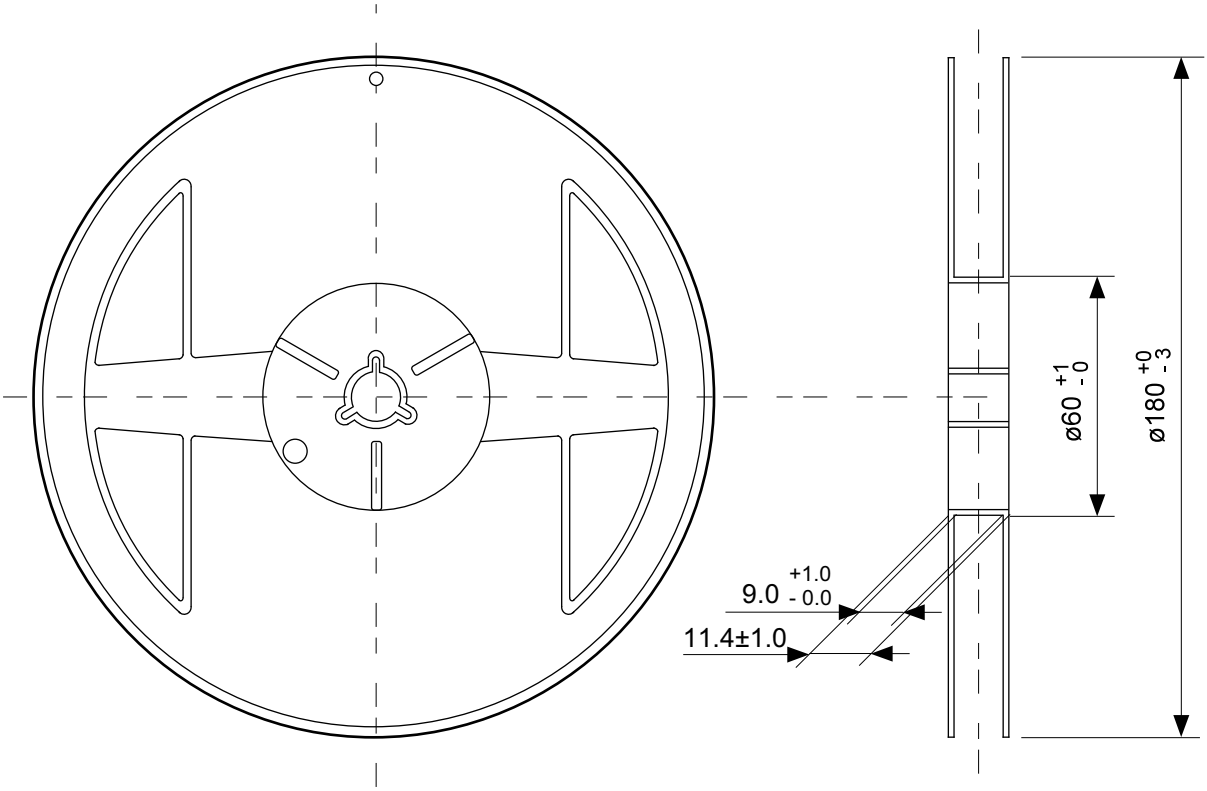

Enlarged drawing in the central part

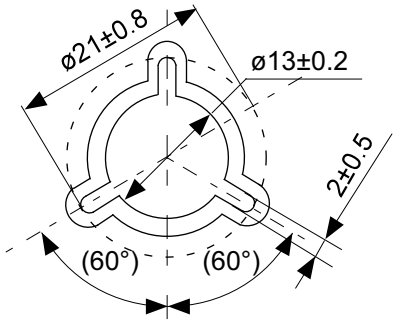

No. PM006-A-R-SD-2.0

TITLE	HSNT-6-B-Reel		
No.	PM006-A-R-SD-2.0		
ANGLE		QTY.	5,000
UNIT	mm		
ABLIC Inc.			

Land Pattern

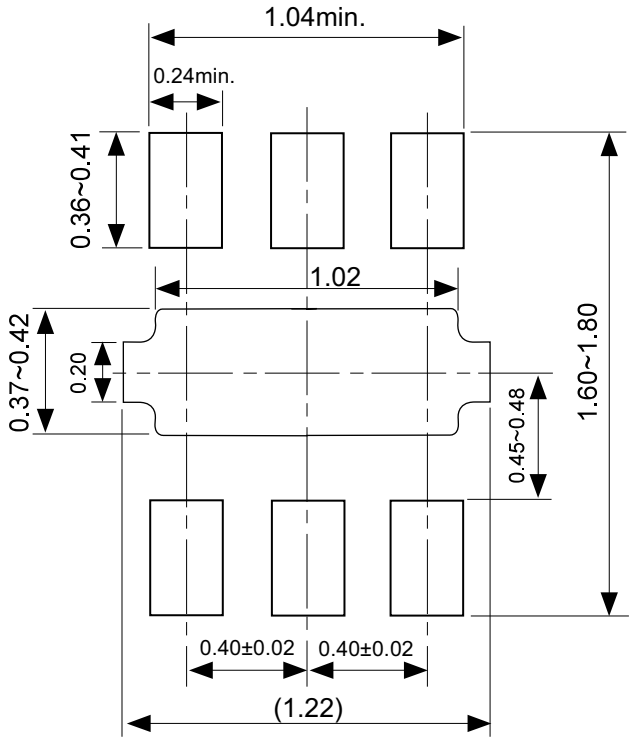

Caution It is recommended to solder the heat sink to a board in order to ensure the heat radiation.

注意 放熱性を確保する為に、PKGの裏面放熱板(ヒートシンク)を基板に半田付けする事を推奨いたします。

Metal Mask Pattern

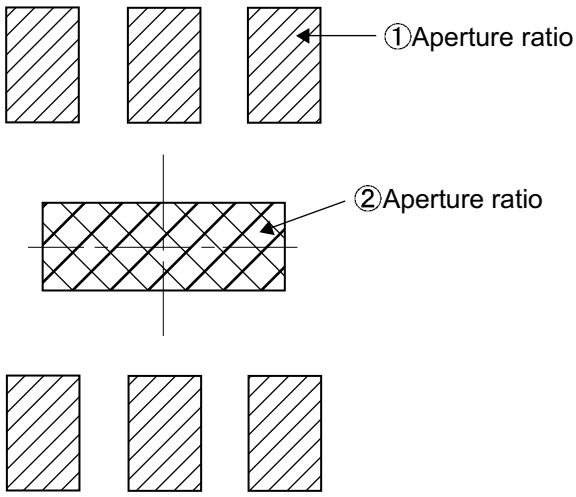

Caution ① Mask aperture ratio of the lead mounting part is 100%.
② Mask aperture ratio of the heat sink mounting part is 40%.
③ Mask thickness: t0.10mm to 0.12 mm

注意 ①リード実装部のマスク開口率は100%です。
②放熱板実装のマスク開口率は40%です。
③マスク厚み：t0.10mm ~ 0.12 mm

No. PM006-A-L-SD-2.0

TITLE	HSNT-6-B -Land Recommendation
No.	PM006-A-L-SD-2.0
ANGLE	
UNIT	mm
	ABLIC Inc.

Disclaimers (Handling Precautions)

1. All the information described herein (product data, specifications, figures, tables, programs, algorithms and application circuit examples, etc.) is current as of publishing date of this document and is subject to change without notice.
2. The circuit examples and the usages described herein are for reference only, and do not guarantee the success of any specific mass-production design.
   ABLIC Inc. is not liable for any losses, damages, claims or demands caused by the reasons other than the products described herein (hereinafter "the products") or infringement of third-party intellectual property right and any other right due to the use of the information described herein.
3. ABLIC Inc. is not liable for any losses, damages, claims or demands caused by the incorrect information described herein.
4. Be careful to use the products within their ranges described herein. Pay special attention for use to the absolute maximum ratings, operation voltage range and electrical characteristics, etc.
   ABLIC Inc. is not liable for any losses, damages, claims or demands caused by failures and / or accidents, etc. due to the use of the products outside their specified ranges.
5. Before using the products, confirm their applications, and the laws and regulations of the region or country where they are used and verify suitability, safety and other factors for the intended use.
6. When exporting the products, comply with the Foreign Exchange and Foreign Trade Act and all other export-related laws, and follow the required procedures.
7. The products are strictly prohibited from using, providing or exporting for the purposes of the development of weapons of mass destruction or military use. ABLIC Inc. is not liable for any losses, damages, claims or demands caused by any provision or export to the person or entity who intends to develop, manufacture, use or store nuclear, biological or chemical weapons or missiles, or use any other military purposes.
8. The products are not designed to be used as part of any device or equipment that may affect the human body, human life, or assets (such as medical equipment, disaster prevention systems, security systems, combustion control systems, infrastructure control systems, vehicle equipment, traffic systems, in-vehicle equipment, aviation equipment, aerospace equipment, and nuclear-related equipment), excluding when specified for in-vehicle use or other uses by ABLIC, Inc. Do not apply the products to the above listed devices and equipments.
   ABLIC Inc. is not liable for any losses, damages, claims or demands caused by unauthorized or unspecified use of the products.
9. In general, semiconductor products may fail or malfunction with some probability. The user of the products should therefore take responsibility to give thorough consideration to safety design including redundancy, fire spread prevention measures, and malfunction prevention to prevent accidents causing injury or death, fires and social damage, etc. that may ensue from the products' failure or malfunction.
   The entire system in which the products are used must be sufficiently evaluated and judged whether the products are allowed to apply for the system on customer's own responsibility.
10. The products are not designed to be radiation-proof. The necessary radiation measures should be taken in the product design by the customer depending on the intended use.
11. The products do not affect human health under normal use. However, they contain chemical substances and heavy metals and should therefore not be put in the mouth. The fracture surfaces of wafers and chips may be sharp. Be careful when handling these with the bare hands to prevent injuries, etc.
12. When disposing of the products, comply with the laws and ordinances of the country or region where they are used.
13. The information described herein contains copyright information and know-how of ABLIC Inc. The information described herein does not convey any license under any intellectual property rights or any other rights belonging to ABLIC Inc. or a third party. Reproduction or copying of the information from this document or any part of this document described herein for the purpose of disclosing it to a third-party is strictly prohibited without the express permission of ABLIC Inc.
14. For more details on the information described herein or any other questions, please contact ABLIC Inc.'s sales representative.
15. This Disclaimers have been delivered in a text using the Japanese language, which text, despite any translations into the English language and the Chinese language, shall be controlling.

2.4-2019.07

ENTEGRECİ

Bu belge www.entegreci.com üzerinden sunulmaktadır.

Elektronik komponent tedarikinde Entegreci

Entegreci, Eskişehir merkezli, Türkiye geneline satış yapan bir elektronik komponent mağazasıdır. Entegreler (IC), mikrodenetleyiciler, transistörler, diyotlar, pasif elemanlar, konnektörler, modüller ve geliştirme kartları tek adetten seri üretim adetlerine kadar satılır. Ürün sayfalarında güncel stok durumunu, fiyatı ve datasheet bağlantısını bulabilirsiniz.

Parça koduyla arama

Üretici parça numarasını yazın; stok ve fiyatı hemen görün.

www.entegreci.com

Ürün kategorileri

Entegreden kapasitöre tüm elektronik komponent kategorileri.

Kategorilere göz atın

Üreticiler

Aradığınız üreticinin ürünlerini tek sayfada inceleyin.

Üreticileri görün

Toplu alım ve teklif

Listede olmayan ya da yüksek adetli parçalar için teklif isteyin.

Teklif isteyin

www.entegreci.com | **destek@entegreci.com** | **0850 305 90 34**

Entegreci is an online electronic components store based in Türkiye. Search by manufacturer part number to see stock, prices and datasheets for integrated circuits, microcontrollers, transistors, passive components and connectors, or request a quote for parts that are not listed.

Bu sayfa Entegreci tarafından eklenmiştir. Belgenin önceki sayfaları asıl yayıncısına aittir ve içeriği değiştirilmemiştir; en güncel sürüm için belgenin yayıncısına başvurun.