S-8213 Series

BATTERY PROTECTION IC FOR 2-SERIAL / 3-SERIAL CELL PACK (SECONDARY PROTECTION)

www.ablicinc.com

© ABLIC Inc., 2012-2017

The S-8213 Series is used for secondary protection of lithium-ion rechargeable batteries, and incorporates a high-accuracy voltage detection circuit and a delay circuit. Short-circuits between VC3 to VSS accommodate serial connection of two cells or three cells.

■ Features

- High-accuracy voltage detection circuit for each cell
  - Overcharge detection voltage n (n = 1 to 3)
    - 4.100 V to 4.500 V (in 50 mV steps)
    - Accuracy: ±25 mV (Ta = +25°C)
    - Accuracy: ±30 mV (Ta = 0°C to +60°C)
  - Overcharge hysteresis voltage n (n = 1 to 3)
    - 0 V ± 25 mV, −0.05 V ± 25 mV, −0.40 V ± 80 mV
- Delay times for overcharge detection can be set by an internal circuit only (external capacitors are unnecessary)
- Output form is selectable: CMOS output, Nch open-drain output
- Output logic is selectable: Active "H", Active "L"
- High-withstand voltage: Absolute maximum rating 26 V
- Wide operation voltage range: 3.6 V to 24 V
- Wide operation temperature range: Ta = −40°C to +85°C
- Low current consumption
  - At V_{CUn} − 1.0 V for each cell: 2.0 μA max. (Ta = +25°C)
  - At 2.0 V for each cell: 0.3 μA max. (Ta = +25°C)
- Lead-free (Sn 100%), halogen-free

■ Application

- Lithium-ion rechargeable battery pack (for secondary protection)

■ Packages

- SOT-23-6
- SNT-6A

NOT RECOMMENDED FOR NEW DESIGN

■ Block Diagram

1. CMOS output product

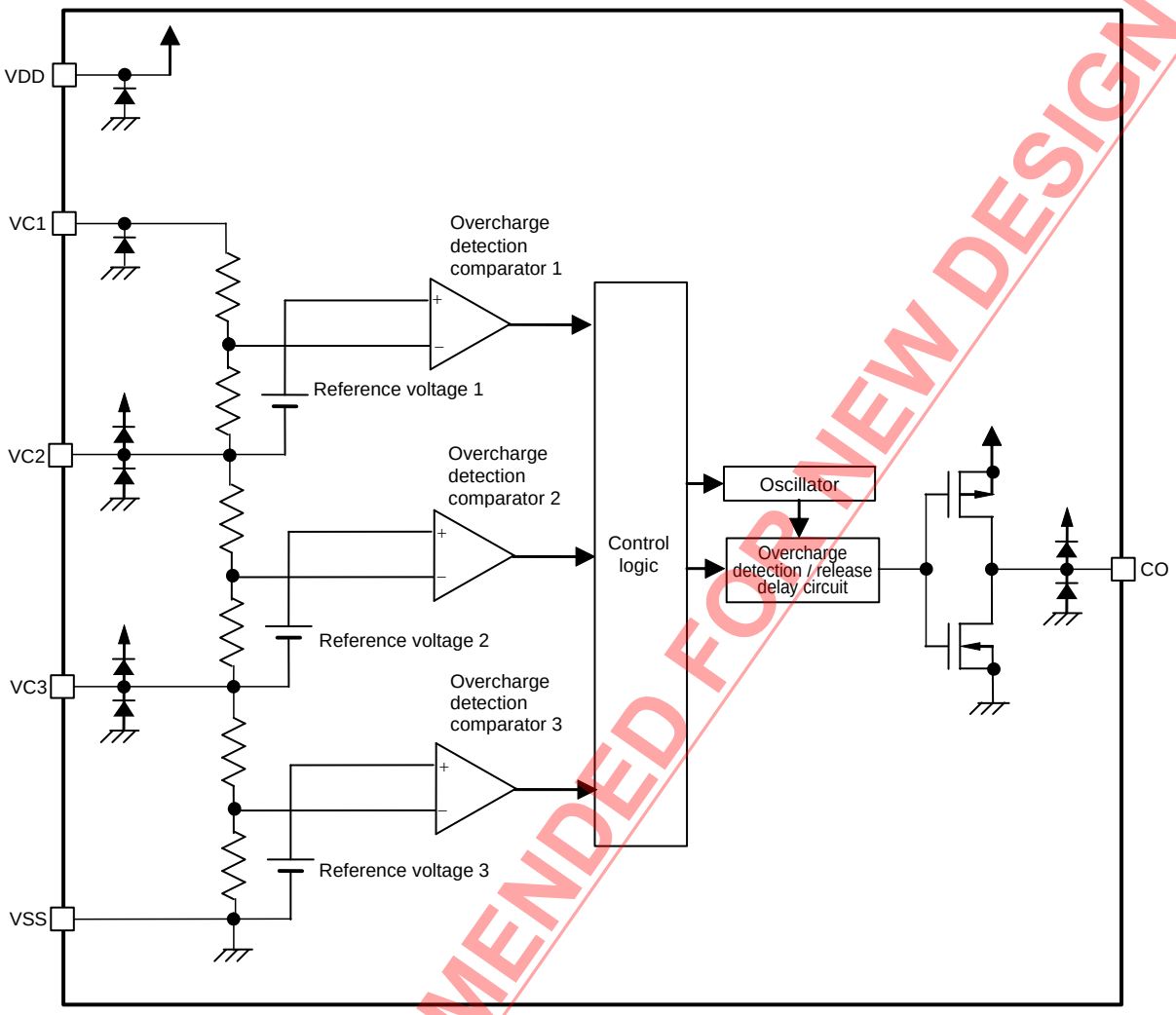

Remark The diodes in the figure are parasitic diodes.

Figure 1

NOT RECOMMENDED FOR NEW DESIGN

2. Nch open-drain output product

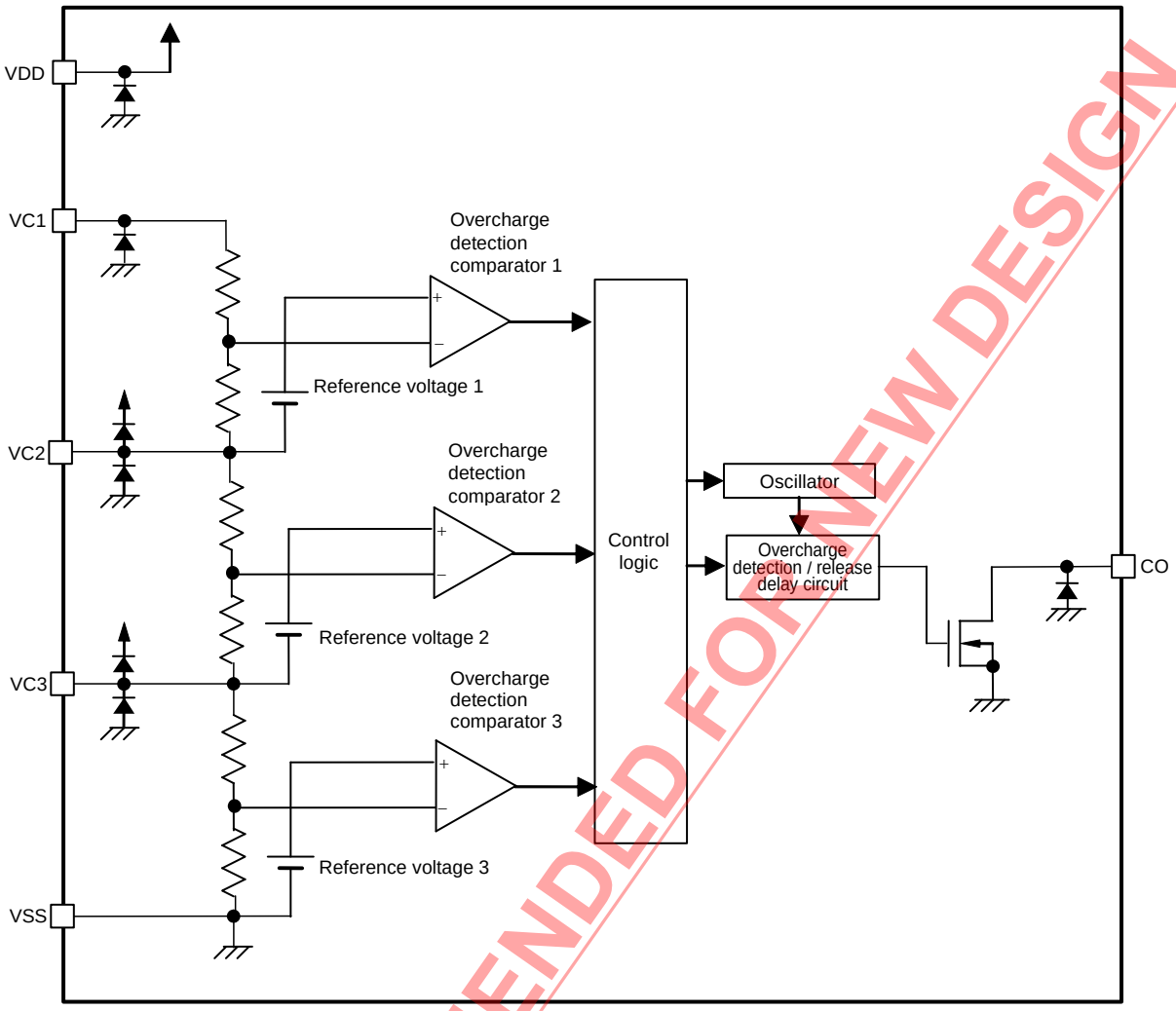

Remark The diodes in the figure are parasitic diodes.

Figure 2

NOT RECOMMENDED FOR NEW DESIGN

■ Product Name Structure

1. Product name

S-8213 xxx - xxxx U

- Environmental code
  - U: Lead-free (Sn 100%), halogen-free
- Package abbreviation and IC packing specifications*1
  - M6T1: SOT-23-6, Tape
  - I6T1: SNT-6A, Tape
- Serial code*2
  - Sequentially set from AAA to AAZ

***1.** Refer to the tape drawing.
***2.** Refer to "**3. Product name list**".

2. Packages

Table 1 Package Drawing Codes

Package Name	Dimension	Tape	Reel	Land
SOT-23-6	MP006-A-P-SD	MP006-A-C-SD	MP006-A-R-SD	–
SNT-6A	PG006-A-P-SD	PG006-A-C-SD	PG006-A-R-SD	PG006-A-L-SD

3. Product name list

3. 1 SNT-6A

Table 2

Product Name	Overcharge Detection Voltage [V_{CU}]	Overcharge Hysteresis Voltage [V_{HC}]	Overcharge Detection Delay Time [t_{CU}]	Output Form	Output Logic
S-8213AAB-I6T1U	4.300 V	–0.40 V	2.0 s	CMOS output	Active "H"
S-8213AAC-I6T1U	4.350 V	–0.40 V	2.0 s	CMOS output	Active "H"
S-8213AAD-I6T1U	4.400 V	–0.40 V	2.0 s	CMOS output	Active "H"
S-8213AAE-I6T1U	4.450 V	–0.40 V	2.0 s	CMOS output	Active "H"
S-8213AAF-I6T1U	4.500 V	–0.40 V	2.0 s	CMOS output	Active "H"
S-8213AAG-I6T1U	4.300 V	–0.40 V	4.0 s	CMOS output	Active "H"
S-8213AAH-I6T1U	4.350 V	–0.40 V	4.0 s	CMOS output	Active "H"
S-8213AAI-I6T1U	4.400 V	–0.40 V	4.0 s	CMOS output	Active "H"
S-8213AAJ-I6T1U	4.450 V	–0.40 V	4.0 s	CMOS output	Active "H"
S-8213AAK-I6T1U	4.500 V	–0.40 V	4.0 s	CMOS output	Active "H"
S-8213AAL-I6T1U	4.300 V	–0.40 V	8.0 s	CMOS output	Active "H"
S-8213AAM-I6T1U	4.350 V	–0.40 V	8.0 s	CMOS output	Active "H"
S-8213AAN-I6T1U	4.400 V	–0.40 V	8.0 s	CMOS output	Active "H"
S-8213AAO-I6T1U	4.450 V	–0.40 V	8.0 s	CMOS output	Active "H"
S-8213AAP-I6T1U	4.500 V	–0.40 V	8.0 s	CMOS output	Active "H"
S-8213AAQ-I6T1U	4.150 V	–0.05 V	2.0 s	CMOS output	Active "L"
S-8213AAR-I6T1U	4.250 V	–0.05 V	2.0 s	CMOS output	Active "L"
S-8213AAS-I6T1U	4.150 V	–0.05 V	2.0 s	Nch open-drain output	Active "H"
S-8213AAT-I6T1U	4.250 V	–0.05 V	2.0 s	Nch open-drain output	Active "H"

Remark Please contact our sales department for the products with detection voltage value other than those specified above.

NOT RECOMMENDED FOR NEW DESIGN

■ Pin Configurations

1. SOT-23-6

Top view

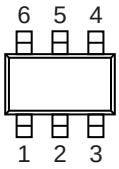

Figure 3

Table 3

Pin No.	Symbol	Description
1	VSS	Input pin for negative power supply, connection pin for negative voltage of battery 3
2	VC3	Connection pin for negative voltage of battery 2, connection pin for positive voltage of battery 3
3	VC2	Connection pin for negative voltage of battery 1, connection pin for positive voltage of battery 2
4	VC1	Connection pin for positive voltage of battery 1
5	VDD	Input pin for positive power supply
6	CO	Connection pin of charge control FET gate

2. SNT-6A

Top view

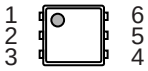

Figure 4

Table 4

Pin No.	Symbol	Description
1	CO	Connection pin of charge control FET gate
2	VDD	Input pin for positive power supply
3	VC1	Connection pin for positive voltage of battery 1
4	VC2	Connection pin for negative voltage of battery 1, connection pin for positive voltage of battery 2
5	VC3	Connection pin for negative voltage of battery 2, connection pin for positive voltage of battery 3
6	VSS	Input pin for negative power supply, connection pin for negative voltage of battery 3

NOT RECOMMENDED FOR NEW DESIGN

■ Absolute Maximum Ratings

Table 5

(Ta = +25°C unless otherwise specified)

Item		Symbol	Applied Pin	Absolute Maximum Rating	Unit
Input voltage between VDD and VSS		V_{DS}	VDD	V_{SS} − 0.3 to V_{SS} + 26	V
Input pin voltage		V_{IN}	VC1, VC2, VC3	V_{SS} − 0.3 to V_{DD} + 0.3	V
CO output pin voltage	CMOS output product	V_{CO}	CO	V_{SS} − 0.3 to V_{DD} + 0.3	V
	Nch open-drain output product			V_{SS} − 0.3 to V_{SS} + 26	V
Power dissipation	SOT-23-6	P_D	−	650[*1]	mW
	SNT-6A			400[*1]	mW
Operation ambient temperature		T_{opr}	−	−40 to +85	°C
Storage temperature		T_{stg}	−	−40 to +125	°C

***1.** When mounted on board

[Mounted board]

(1) Board size: 114.3 mm × 76.2 mm × t1.6 mm

(2) Name: JEDEC STANDARD51-7

Caution **The absolute maximum ratings are rated values exceeding which the product could suffer physical damage. These values must therefore not be exceeded under any conditions.**

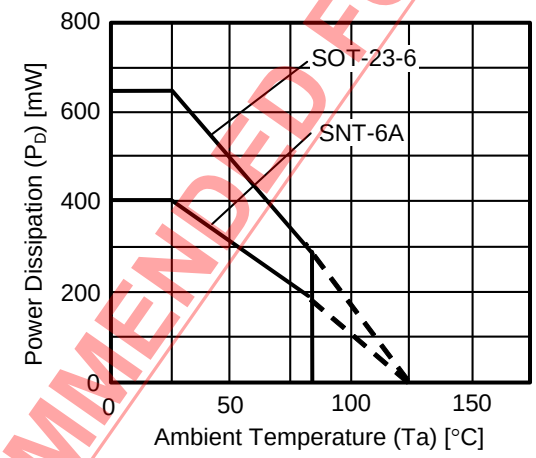

Figure 5 Power Dissipation of Package (When Mounted on Board)

NOT RECOMMENDED FOR NEW DESIGN

■ Electrical Characteristics

Table 6

(Ta = +25°C unless otherwise specified)

Item	Symbol	Condition	Min.	Typ.	Max.	Unit	Test Circuit
DETECTION VOLTAGE							
Overcharge detection voltage n (n = 1, 2, 3)	V_{CUn}	–	V_{CU} – 0.025	V_{CU}	V_{CU} + 0.025	V	1
		Ta = 0°C to +60°C*1	V_{CU} – 0.030	V_{CU}	V_{CU} + 0.030	V	1
Overcharge hysteresis voltage n (n = 1, 2, 3)	V_{HCn}	V_{HC} = –0.40 V	V_{HC} – 0.080	V_{HC}	V_{HC} + 0.080	V	1
		V_{HC} = 0 V, –0.05 V	V_{HC} – 0.025	V_{HC}	V_{HC} + 0.025	V	1
INPUT VOLTAGE							
Operation voltage between VDD and VSS	V_{DSOP}	–	3.6	–	24	V	–
INPUT CURRENT							
Current consumption during operation	I_{OPE}	V1 = V2 = V3 = V_{CU} – 1.0 V	–	–	2.0	µA	3
Current consumption during overdischarge	I_{PDN}	V1 = V2 = V3 = 2.0 V	–	–	0.3	µA	3
VC1 pin current	I_{VC1}	V1 = V2 = V3 = V_{CU} – 1.0 V	–	–	0.3	µA	4
VC2 pin, VC3 pin current	I_{VC2}, I_{VC3}	V1 = V2 = V3 = V_{CU} – 1.0 V	–0.3	0	0.3	µA	4
OUTPUT CURRENT							
CO pin sink current	I_{COL}	–	0.4	–	–	mA	5
CO pin source current (CMOS output product)	I_{COH}	–	20	–	–	µA	5
CO pin leakage current (Nch open-drain output product)	I_{COLL}	–	–	–	0.1	µA	5
DELAY TIME							
Overcharge detection delay time	t_{CU}	–	t_{CU} × 0.8	t_{CU}	t_{CU} × 1.2	s	1
Transition time to test mode	t_{TST}	–	–	–	20	ms	2

***1.** Since products are not screened at high and low temperature, the specification for this temperature range is guaranteed by design, not tested in production.

NOT RECOMMENDED FOR NEW DESIGN

■ Test Circuits

1. Overcharge detection voltage, overcharge hysteresis voltage (Test circuit 1)

Set SW1 to OFF and ON in CMOS output product and Nch open-drain output product, respectively.

1. 1 Overcharge detection voltage n (V_{CUn})

Set V1 = V2 = V3 = V_{CU} – 0.05 V. The Overcharge detection voltage 1 (V_{CU1}) is the V1 voltage when the CO pin's output changes after the voltage of V1 has been gradually increased.
Overcharge detection voltage V_{CUn} (n = 2, 3) can be determined in the same way as when n = 1.

1. 2 Overcharge hysteresis voltage n (V_{HCn})

Set V1 = V_{CU} + 0.05 V, V2 = V3 = 2.5 V. The overcharge hysteresis voltage 1 (V_{HC1}) is the difference between V1 voltage and V_{CU1} when the CO pin's output changes after the V1 voltage has been gradually decreased.
Overcharge hysteresis voltage V_{HCn} (n = 2, 3) can be determined in the same way as when n = 1.

2. Output current (Test circuit 5)

Set SW1 and SW2 to OFF.

2. 1 Active "H"

2. 1. 1 CO pin source current (I_{COH})

Set SW1 to ON after setting V1 = 5.0 V, V2 = V3 = 3.0 V, V4 = 0.5 V. I1 is the CO pin source current (I_{COH}) at that time.

2. 1. 2 CO pin sink current (I_{COL})

Set SW2 to ON after setting V1 to V3 = 3.5 V, V5 = 0.5 V. I2 is the CO pin sink current (I_{COL}) at that time.

2. 1. 3 CO pin leakage current (I_{COLL})

Set SW2 to ON after setting V1 = 5.0 V, V2 = V3 = 3.0 V, V5 = 26 V. I2 is the CO pin leakage current (I_{COLL}) at that time.

2. 2 Active "L"

2. 2. 1 CO pin source current (I_{COH})

Set SW1 to ON after setting V1 to V3 = 3.5 V, V4 = 0.5 V. I1 is the CO pin source current (I_{COH}) at that time.

2. 2. 2 CO pin sink current (I_{COL})

Set SW2 to ON after setting V1 = 5.0 V, V2 = V3 = 3.0 V, V5 = 0.5 V. I2 is the CO pin sink current (I_{COL}) at that time.

2. 2. 3 CO pin leakage current (I_{COLL})

Set SW2 to ON after setting V1 to V3 = 3.5 V, V5 = 26 V. I2 is the CO pin leakage current (I_{COLL}) at that time.

NOT RECOMMENDED FOR NEW DESIGN

3. Overcharge detection delay time (t_{CU}) (Test circuit 1)

Set SW1 to OFF and ON in CMOS output product and Nch open-drain output product, respectively.

Increase V1 up to 5.0 V after setting V1 = V2 = V3 = 3.5 V. The overcharge detection delay time (t_{CU}) is the time period until the CO pin output changes.

4. Transition time to test mode (t_{TST}) (Test circuit 2)

Set SW1 to OFF and ON in CMOS output product and Nch open-drain output product, respectively.

Increase V4 up to 4.0 V, and decrease V4 again to 0 V after setting V1 = V2 = V3 = 3.5 V, and V4 = 0 V.
When the period from when V4 was raised to when it has fallen is short, if an overcharge detection operation is performed subsequently, the delay time is t_{CU}. However, when the period from when V4 is raised to when it has fallen is gradually made longer, the delay time during the subsequent overcharge detection operation is shorter than t_{CU}. The transition time to test mode (t_{TST}) is the period from when V4 was raised to when it has fallen at that time.

NOT RECOMMENDED FOR NEW DESIGN

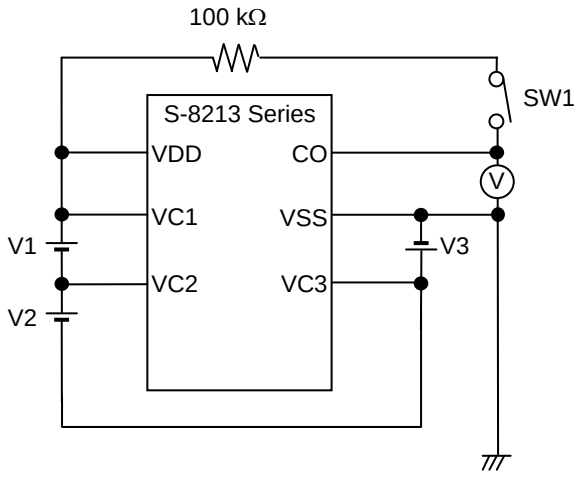

Figure 6 Test Circuit 1

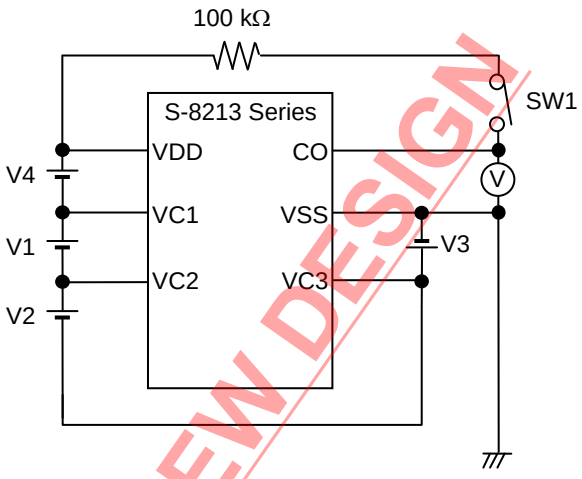

Figure 7 Test Circuit 2

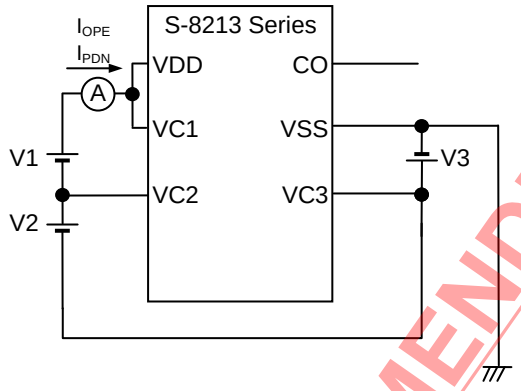

Figure 8 Test Circuit 3

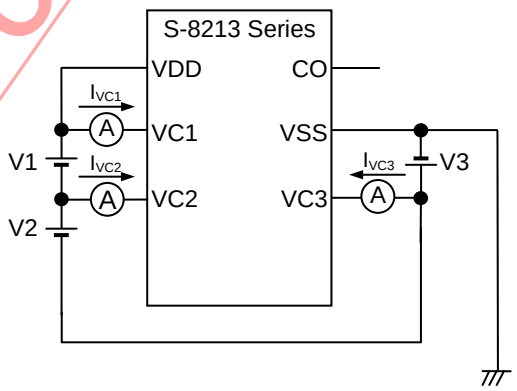

Figure 9 Test Circuit 4

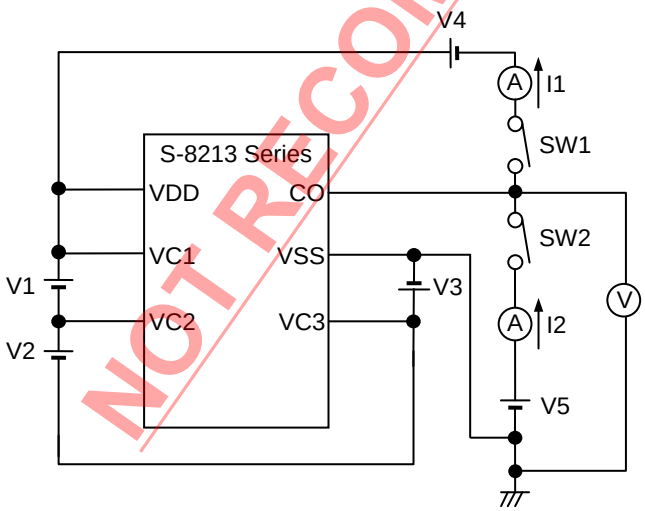

Figure 10 Test Circuit 5

NOT RECOMMENDED FOR NEW DESIGN

■ Operation

Remark Refer to **"■ Battery Protection IC Connection Examples".**

1. Normal status

If the voltage of each of the batteries is lower than "the overcharge detection voltage (V_{CUn}) + the overcharge hysteresis voltage (V_{HCn})", CO pin output changes to "L" (Active "H") or "H" (Active "L"). This is called normal status.

2. Overcharge status

When the voltage of one of the batteries exceeds V_{CUn} during charging under normal conditions and the status is retained for the overcharge detection delay time (t_{CU}) or longer, CO pin output changes. This is called overcharge status. Connecting FET to the CO pin provides charge control and a second protection.
If the voltage of each of the batteries is lower than $V_{CUn} + V_{HCn}$ and the status is retained for 2.0 ms typ. or longer, the S-8213 Series changes to normal status.

NOT RECOMMENDED FOR NEW DESIGN

3. Test mode

The overcharge detection delay time (t_{CU}) can be shortened by entering the test mode.

The test mode can be set by retaining the VDD pin voltage 4.0 V or more higher than the VC1 pin voltage for 20 ms or longer. The status is retained by the internal latch and the test mode is retained even if the VDD pin voltage is decreased to the same voltage as that of the VC1 pin voltage.

After that, the latch for retaining the test mode is reset and the S-8213 Series exits from test mode under the overcharge status.

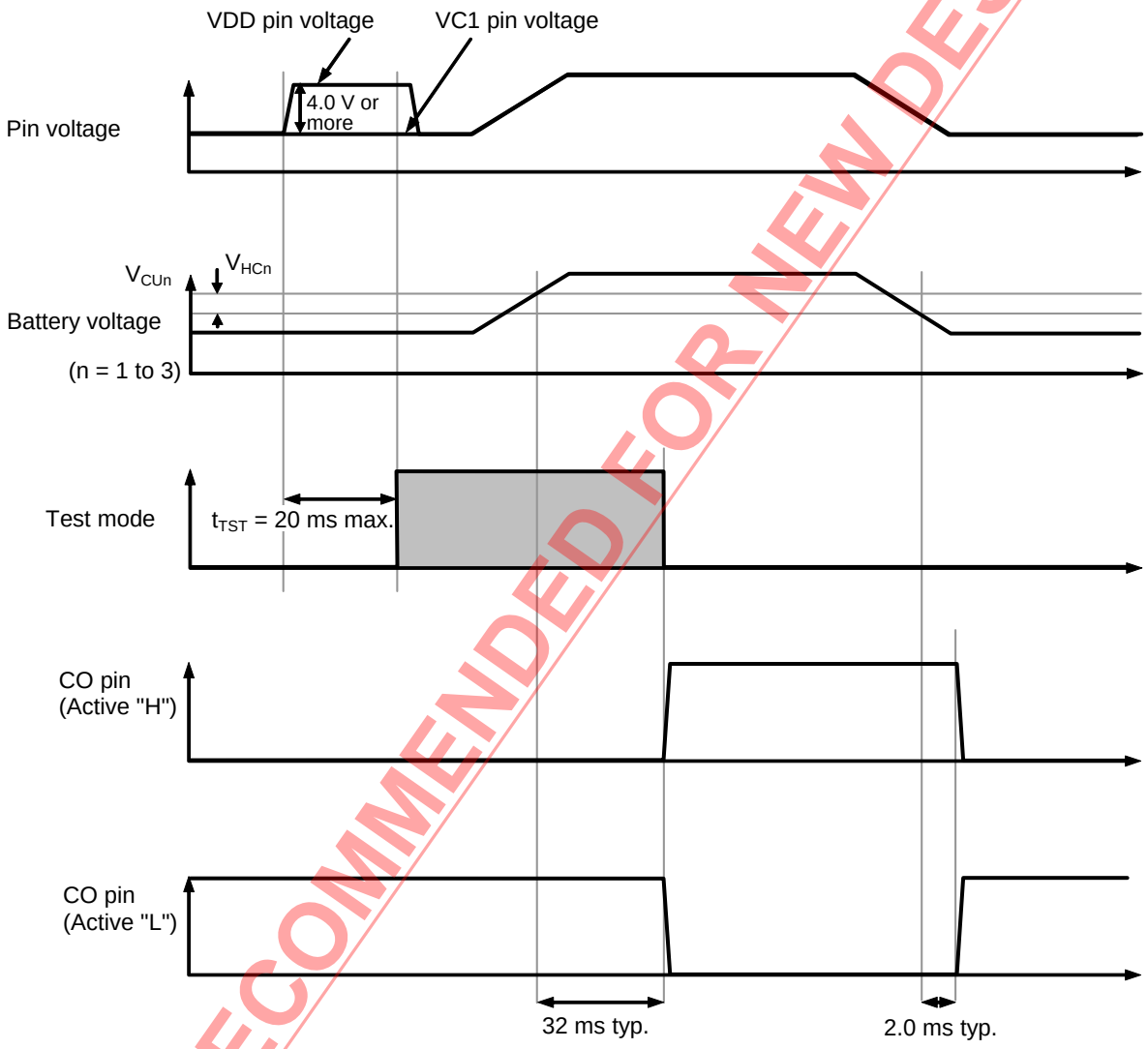

Figure 11

NOT RECOMMENDED FOR NEW DESIGN

■ Timing Charts

1. Overcharge detection operation

1. 1 CMOS output product

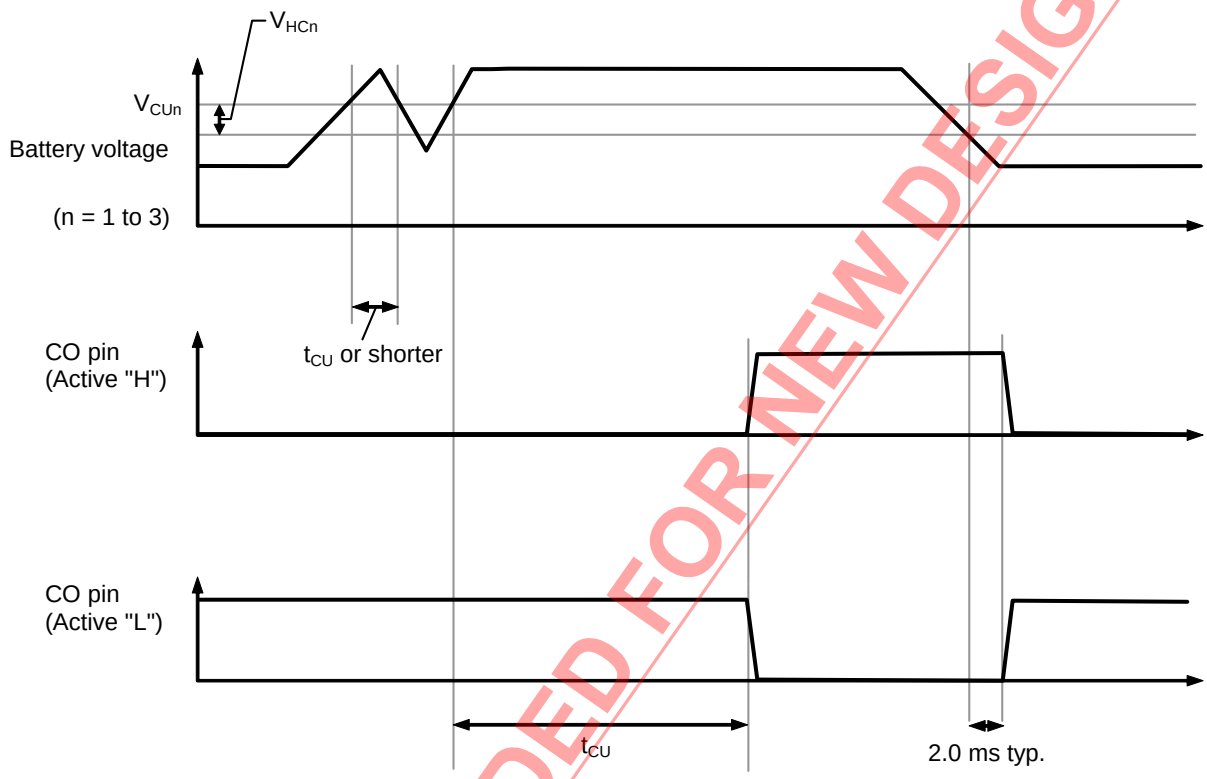

Figure 12

NOT RECOMMENDED FOR NEW DESIGN

1. 2 Nch open-drain output product

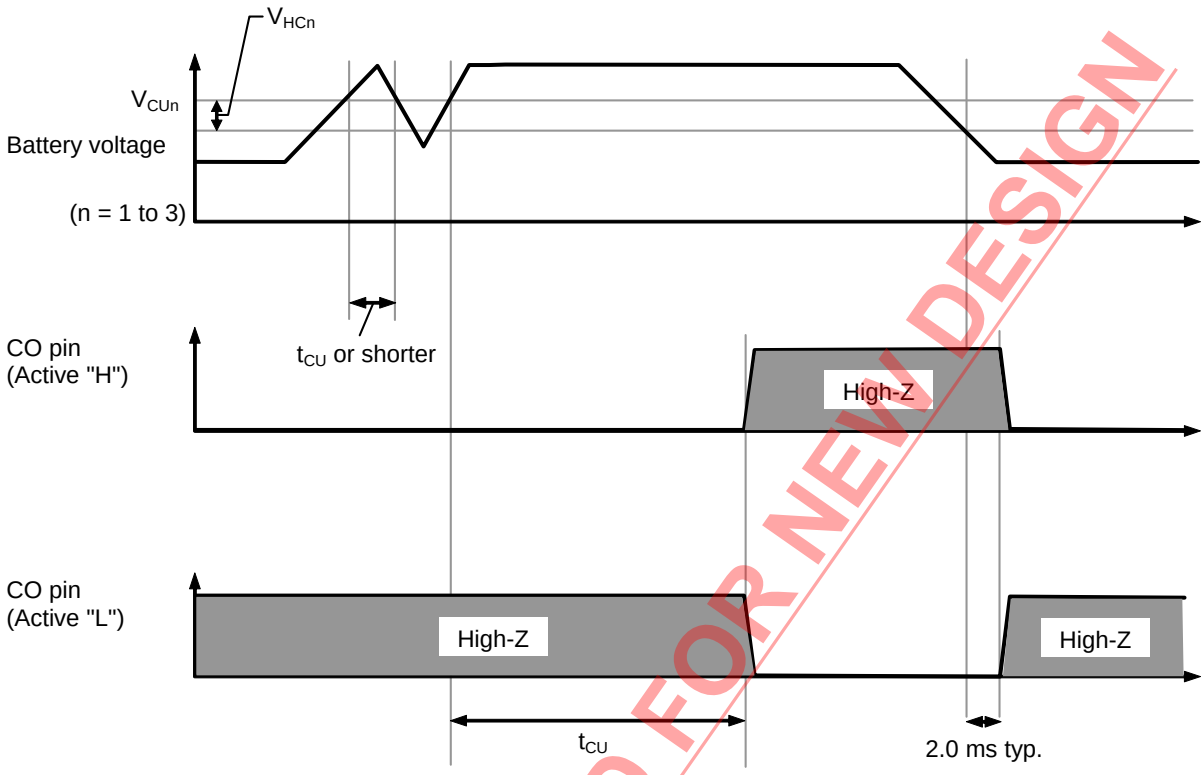

Figure 13

NOT RECOMMENDED FOR NEW DESIGN

■ Battery Protection IC Connection Examples

1. 3-serial cell (CMOS output product)

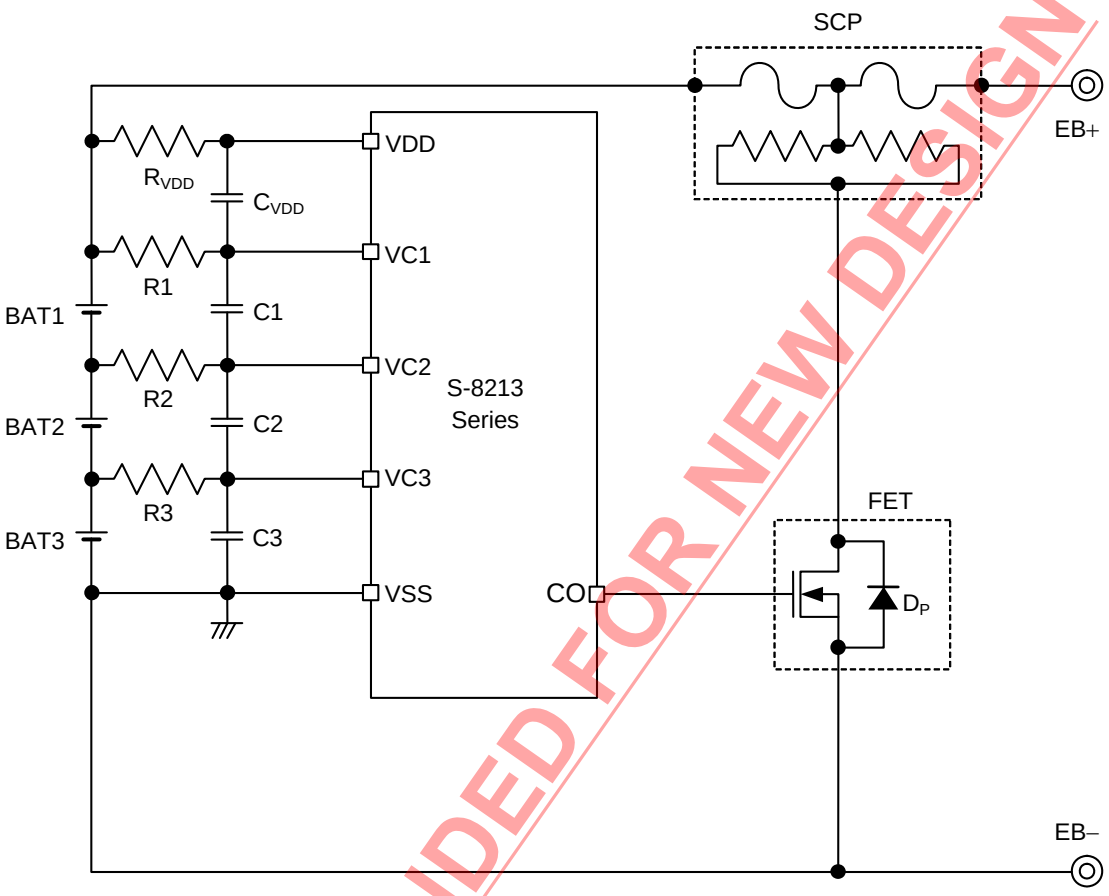

Figure 14

Table 7 Constants for External Components

No.	Part	Min.	Typ.	Max.	Unit
1	R1 to R3	0.2	1	2	kΩ
2	C1 to C3, C_{VDD}	0.01	0.1	1	μF
3	R_{VDD}	50	100	500	Ω

Caution
1. **The above constants are subject to change without prior notice.**
2. **It has not been confirmed whether the operation is normal or not in circuits other than the above example of connection. In addition, the example of connection shown above and the constant will not guarantee successful operation. Perform thorough evaluation using the actual application to set the constant.**
3. **Set the same constants to R1 to R3 and to C1 to C3 and C_{VDD}.**
4. **Set R_{VDD}, C1 to C3, and C_{VDD} so that the condition (R_{VDD}) × (C1 to C3, C_{VDD}) ≥ 5×10^{-6} is satisfied.**
5. **Set R1 to R3, C1 to C3, and C_{VDD} so that the condition (R1 to R3) × (C1 to C3, C_{VDD}) ≥ 1×10^{-4} is satisfied.**
6. **Since CO pin may become detection status transiently when the battery is being connected, connect the positive terminal of BAT1 last in order to prevent the three terminal protection fuse from cutoff.**

NOT RECOMMENDED FOR NEW DESIGN

2. 2-serial cell (CMOS output product)

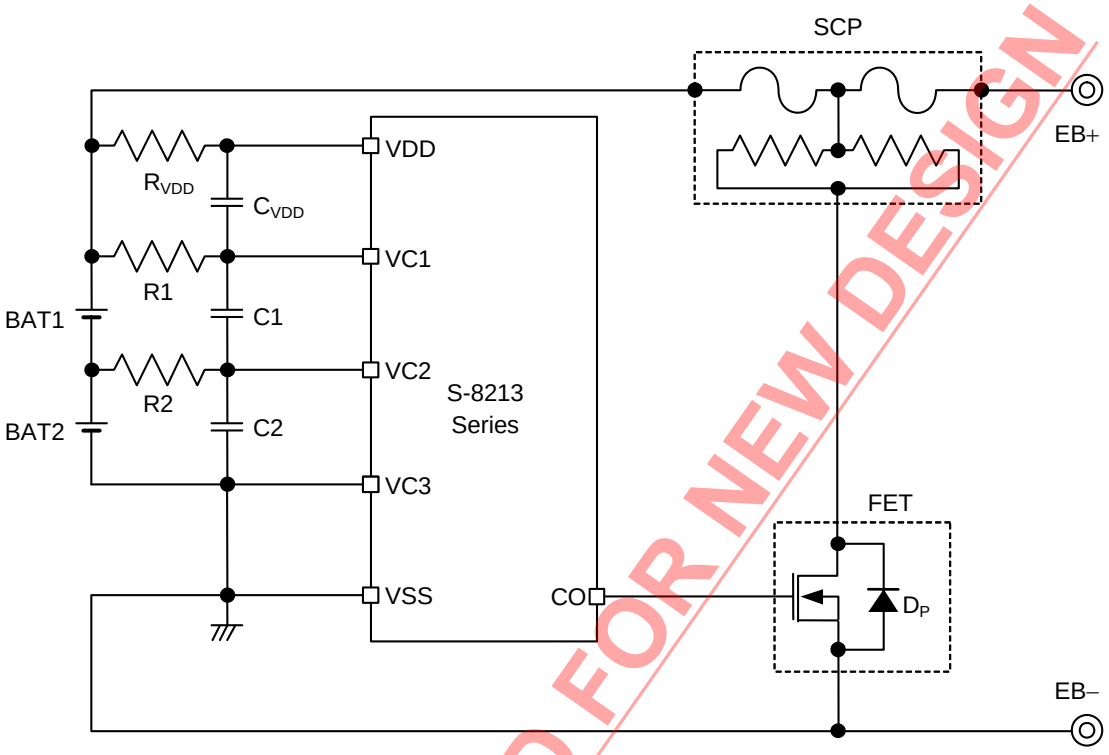

Figure 15

Table 8 Constants for External Components

No.	Part	Min.	Typ.	Max.	Unit
1	R1, R2	0.2	1	2	kΩ
2	C1, C2, C_{VDD}	0.01	0.1	1	μF
3	R_{VDD}	50	100	500	Ω

Caution
1. **The above constants are subject to change without prior notice.**
2. **It has not been confirmed whether the operation is normal or not in circuits other than the above example of connection. In addition, the example of connection shown above and the constant will not guarantee successful operation. Perform thorough evaluation using the actual application to set the constant.**
3. **Set the same constants to R1, R2 and to C1, C2 and C_{VDD}.**
4. **Set R_{VDD}, C1, C2, and C_{VDD} so that the condition (R_{VDD}) × (C1, C2, C_{VDD}) ≥ 5×10^{-6} is satisfied.**
5. **Set R1, R2, C1, C2, and C_{VDD} so that the condition (R1, R2) × (C1, C2, C_{VDD}) ≥ 1×10^{-4} is satisfied.**
6. **Since CO pin may become detection status transiently when the battery is being connected, connect the positive terminal of BAT1 last in order to prevent the three terminal protection fuse from cutoff.**

NOT RECOMMENDED FOR NEW DESIGN

[For SCP, contact]

Global Sales & Marketing Division, Dexerials Corporation
Gate City Osaki East Tower 8F, 1-11-2
Osaki, Shinagawa-ku, Tokyo, 141-0032, Japan
TEL +81-3-5435-3946
Contact Us: http://www.dexerials.jp/en/

■ Precautions

- Do not connect batteries charged with $V_{CUn} + V_{HCn}$ or higher. If the connected batteries include a battery charged with $V_{CUn} + V_{HCn}$ or more, the S-8213 series may become overcharge status after all pins are connected.
- In some application circuits, even if an overcharged battery is not included, the order of connecting batteries may be restricted to prevent transient output of CO detection pulses when the batteries are connected. Perform thorough evaluation with the actual application circuit.
- Before the battery connection, short-circuit the battery side pins R_{VDD} and R1, shown in the figure in "**■ Battery Protection IC Connection Examples**".
- The application conditions for the input voltage, output voltage, and load current should not exceed the package power dissipation.
- Do not apply to this IC an electrostatic discharge that exceeds the performance ratings of the built-in electrostatic protection circuit.
- ABLIC Inc. claims no responsibility for any disputes arising out of or in connection with any infringement of patents owned by a third party by products including this IC.

NOT RECOMMENDED FOR NEW DESIGN

■ Characteristics (Typical Data)

1. Detection voltage

1. 1 V_{CU} vs. Ta

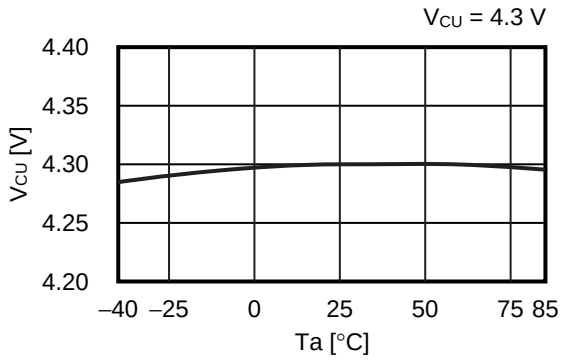

1. 2 V_{CU} + V_{HC} vs. Ta

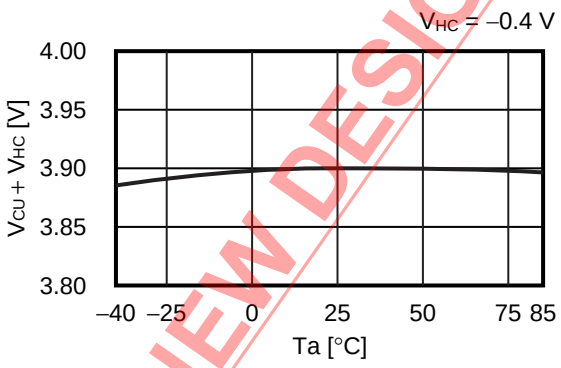

2. Current consumption

2. 1 I_{OPE} vs. Ta

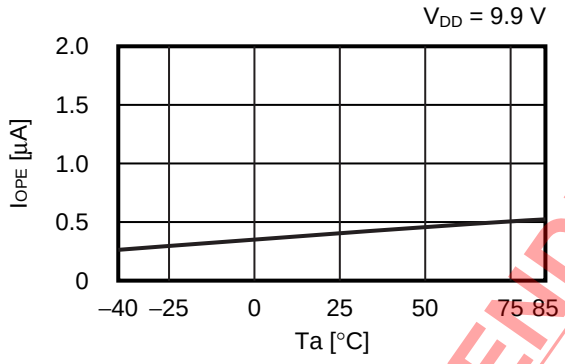

2. 2 I_{PDN} vs. Ta

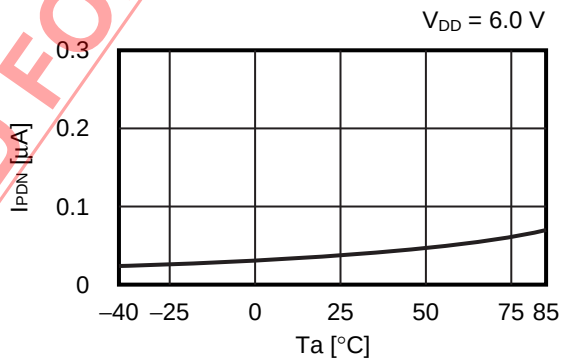

2. 3 I_{OPE} vs. V_{DD}

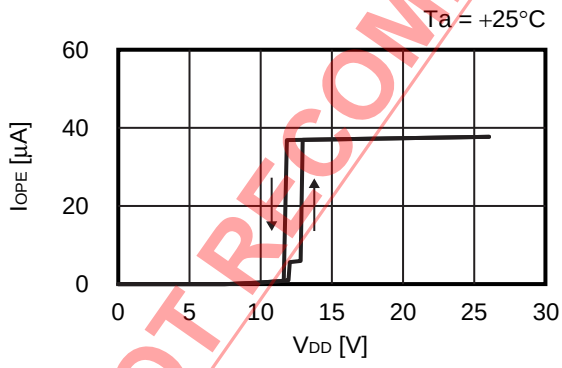

NOT RECOMMENDED FOR NEW DESIGN

3. Delay time

3. 1 t_{CU} vs. Ta

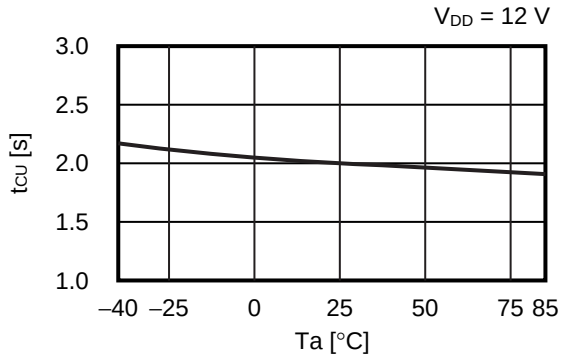

4. Output current

4. 1 I_{COL} vs. V_{DD}

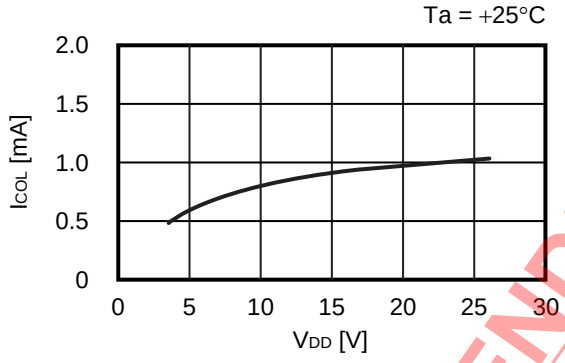

4. 2 I_{COH} vs. V_{DD}

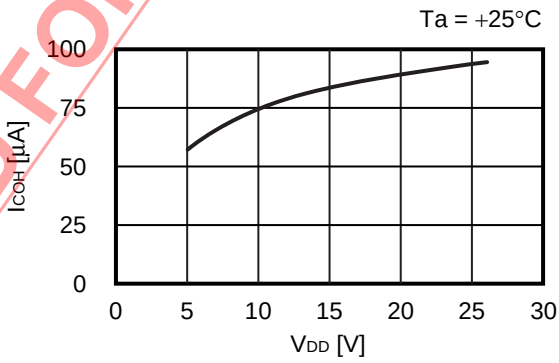

4. 3 I_{COLL} vs. V_{DD}

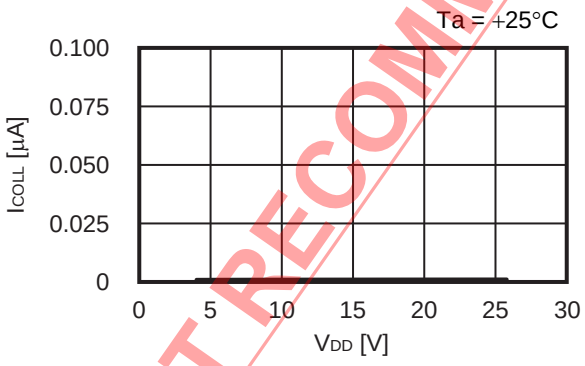

NOT RECOMMENDED FOR NEW DESIGN

■ Marking Specification

1. SNT-6A

Top view

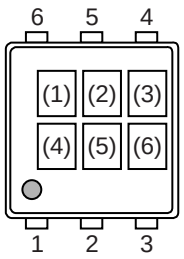

(1) to (3): Product code (Refer to **Product name vs. Product code**)
(4) to (6): Lot number

Product name vs. Product code

Product Name	Product Code		
	(1)	(2)	(3)
S-8213AAB-I6T1U	S	U	B
S-8213AAC-I6T1U	S	U	C
S-8213AAD-I6T1U	S	U	D
S-8213AAE-I6T1U	S	U	E
S-8213AAF-I6T1U	S	U	F
S-8213AAG-I6T1U	S	U	G
S-8213AAH-I6T1U	S	U	H
S-8213AAI-I6T1U	S	U	I
S-8213AAJ-I6T1U	S	U	J
S-8213AAK-I6T1U	S	U	K
S-8213AAL-I6T1U	S	U	L
S-8213AAM-I6T1U	S	U	M
S-8213AAN-I6T1U	S	U	N
S-8213AAO-I6T1U	S	U	O
S-8213AAP-I6T1U	S	U	P
S-8213AAQ-I6T1U	S	U	Q
S-8213AAR-I6T1U	S	U	R
S-8213AAS-I6T1U	S	U	S
S-8213AAT-I6T1U	S	U	T

NOT RECOMMENDED FOR NEW DESIGN

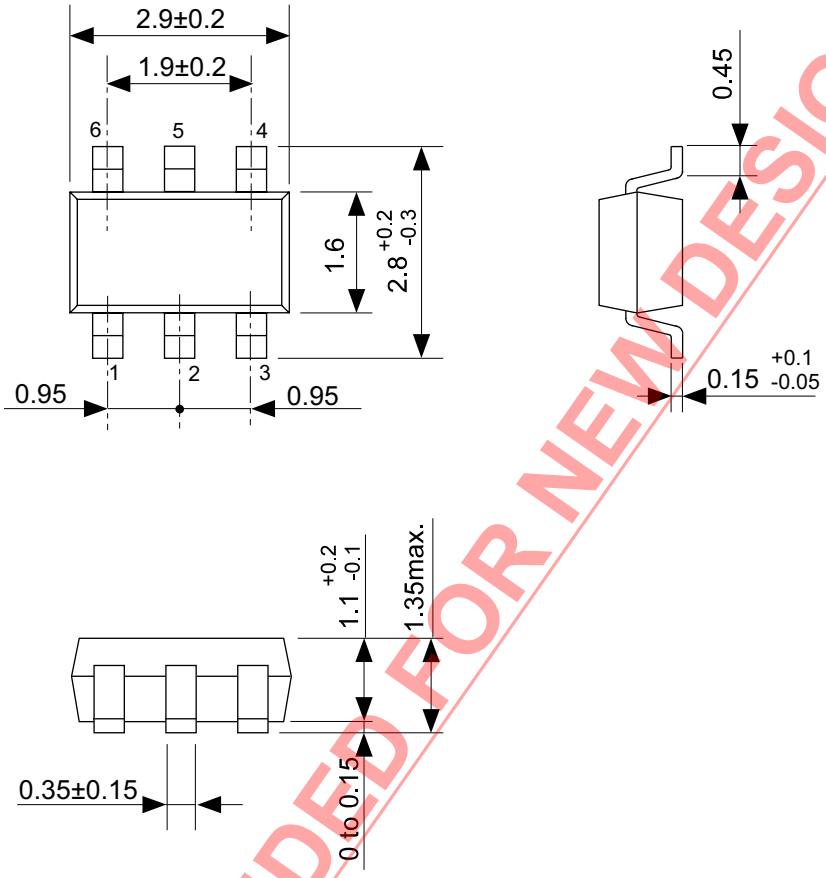

NOT RECOMMENDED FOR NEW DESIGN

No. MP006-A-P-SD-2.1

TITLE	SOT236-A-PKG Dimensions
No.	MP006-A-P-SD-2.1
ANGLE	
UNIT	mm

ABLIC Inc.

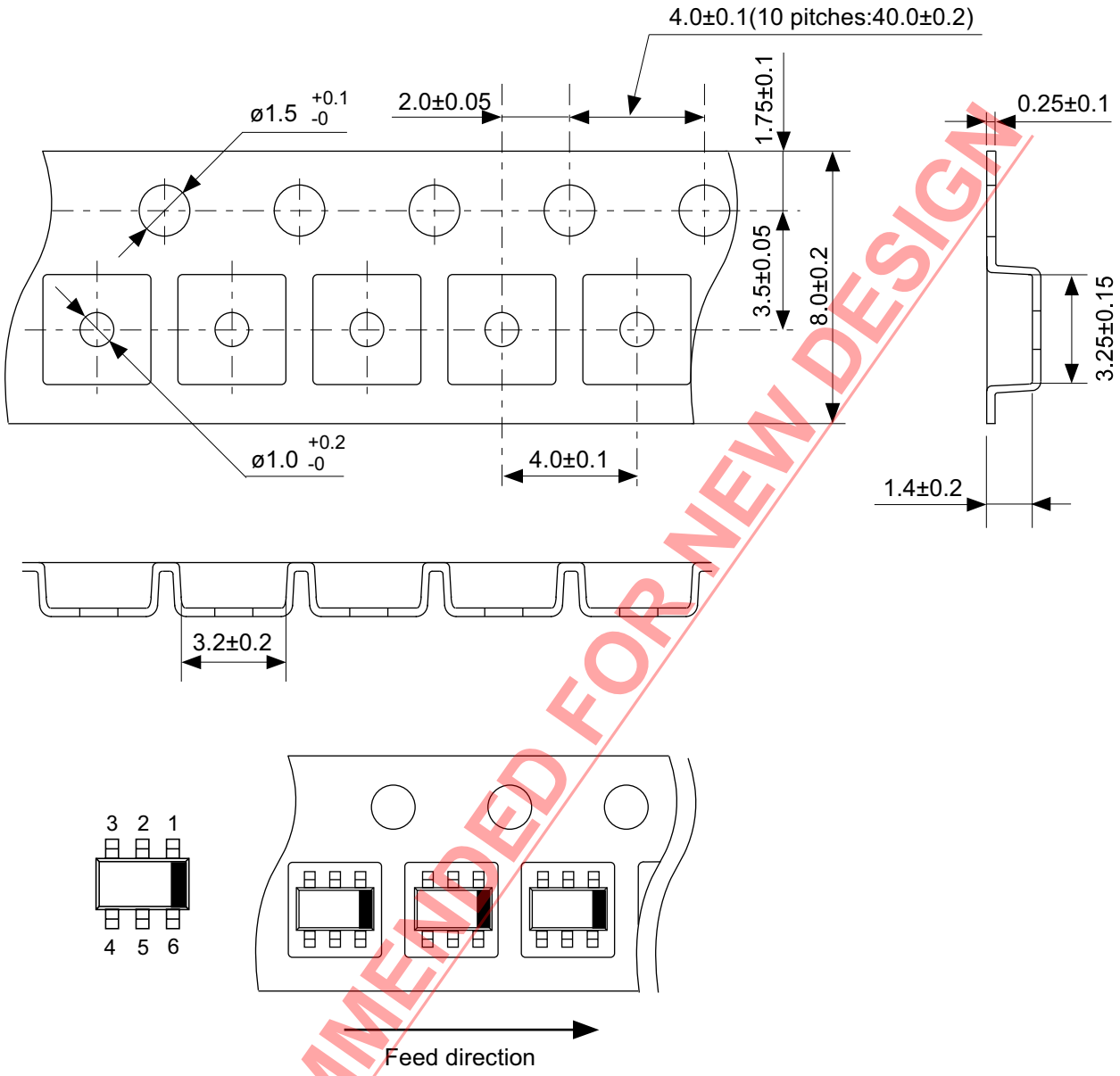

NOT RECOMMENDED FOR NEW DESIGN

No. MP006-A-C-SD-3.1

TITLE	SOT236-A-Carrier Tape
No.	MP006-A-C-SD-3.1
ANGLE	
UNIT	mm

ABLIC Inc.

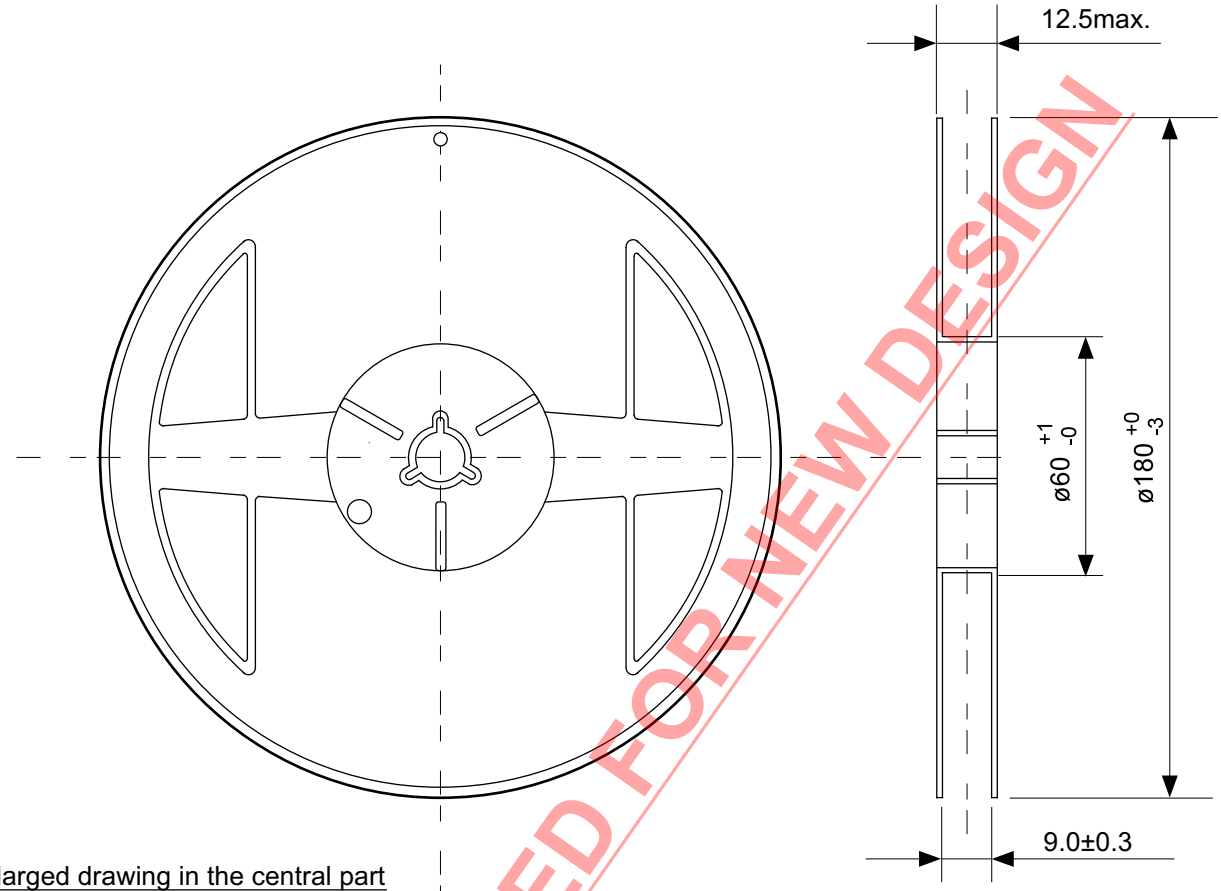

Enlarged drawing in the central part

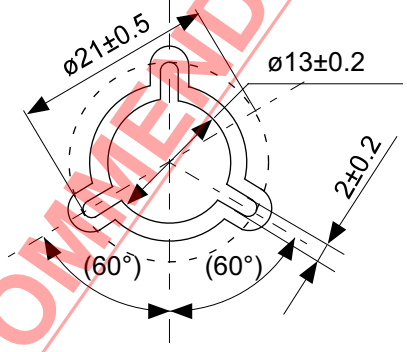

No. MP006-A-R-SD-2.1

NOT RECOMMENDED FOR NEW DESIGN

TITLE	SOT236-A-Reel		
No.	MP006-A-R-SD-2.1		
ANGLE		QTY	3,000
UNIT	mm		

ABLIC Inc.

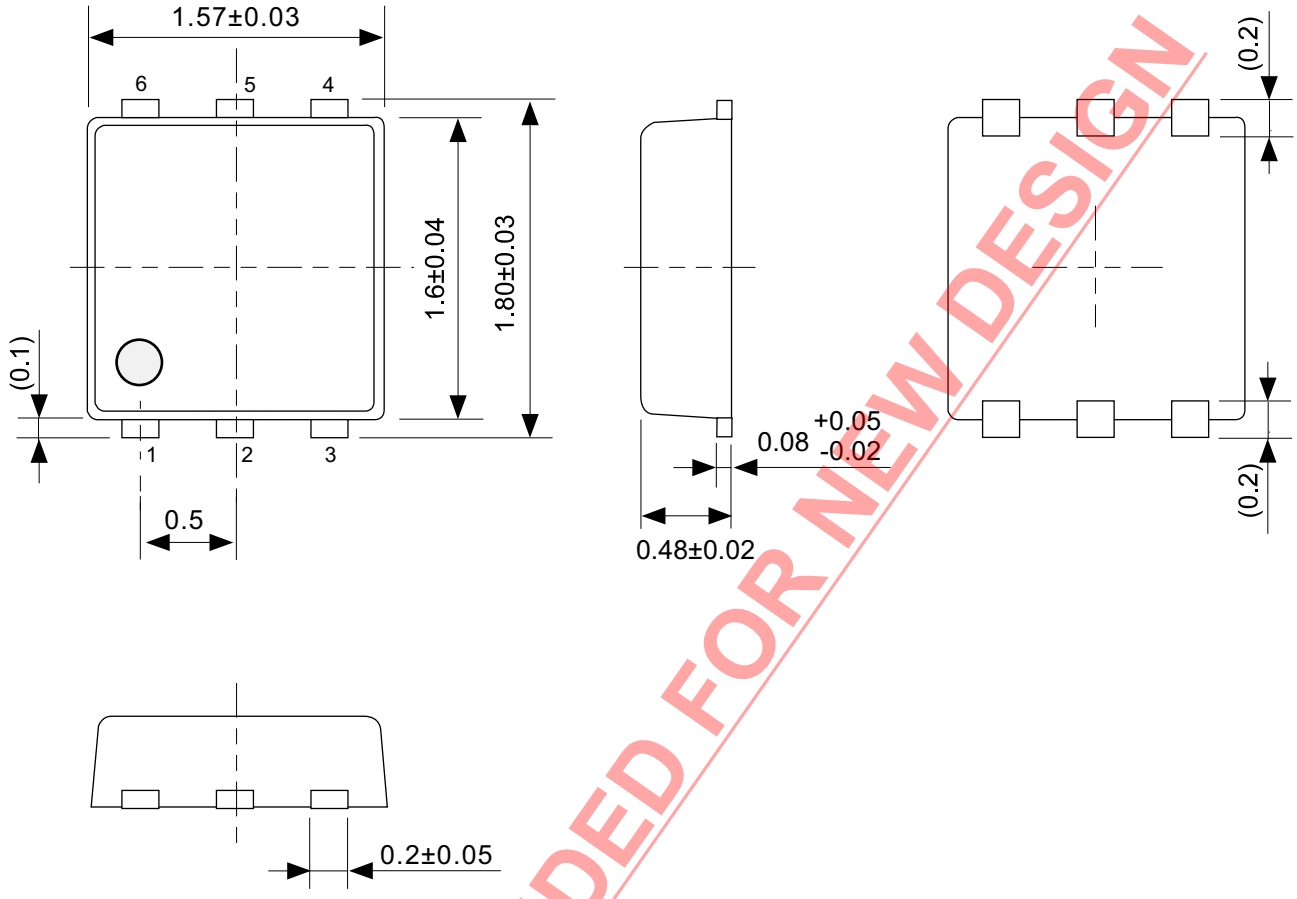

NOT RECOMMENDED FOR NEW DESIGN

No. PG006-A-P-SD-2.1

TITLE	SNT-6A-A-PKG Dimensions
No.	PG006-A-P-SD-2.1
ANGLE	
UNIT	mm

ABLIC Inc.

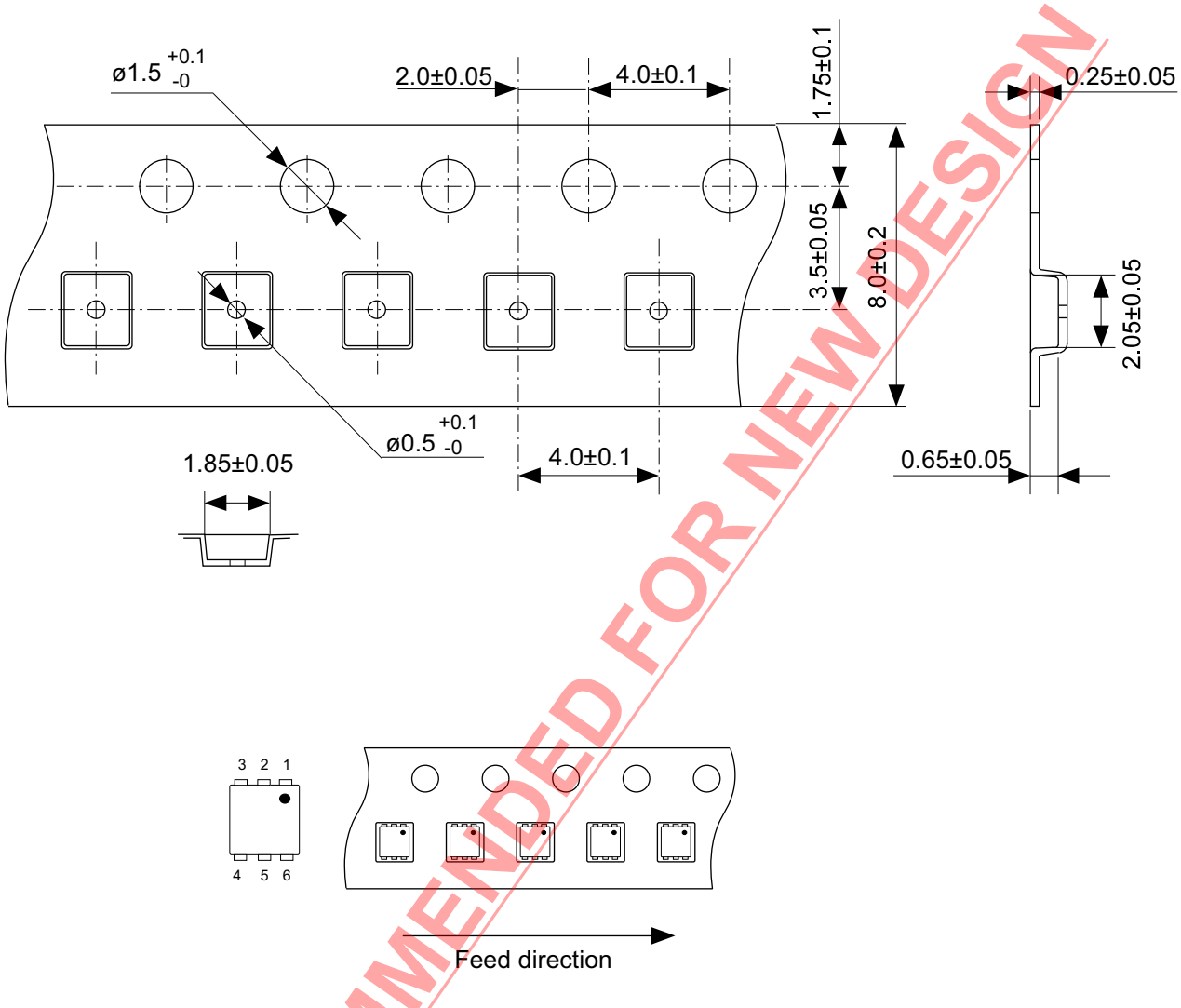

NOT RECOMMENDED FOR NEW DESIGN

No. PG006-A-C-SD-2.0

TITLE	SNT-6A-A-Carrier Tape
No.	PG006-A-C-SD-2.0
ANGLE	
UNIT	mm

ABLIC Inc.

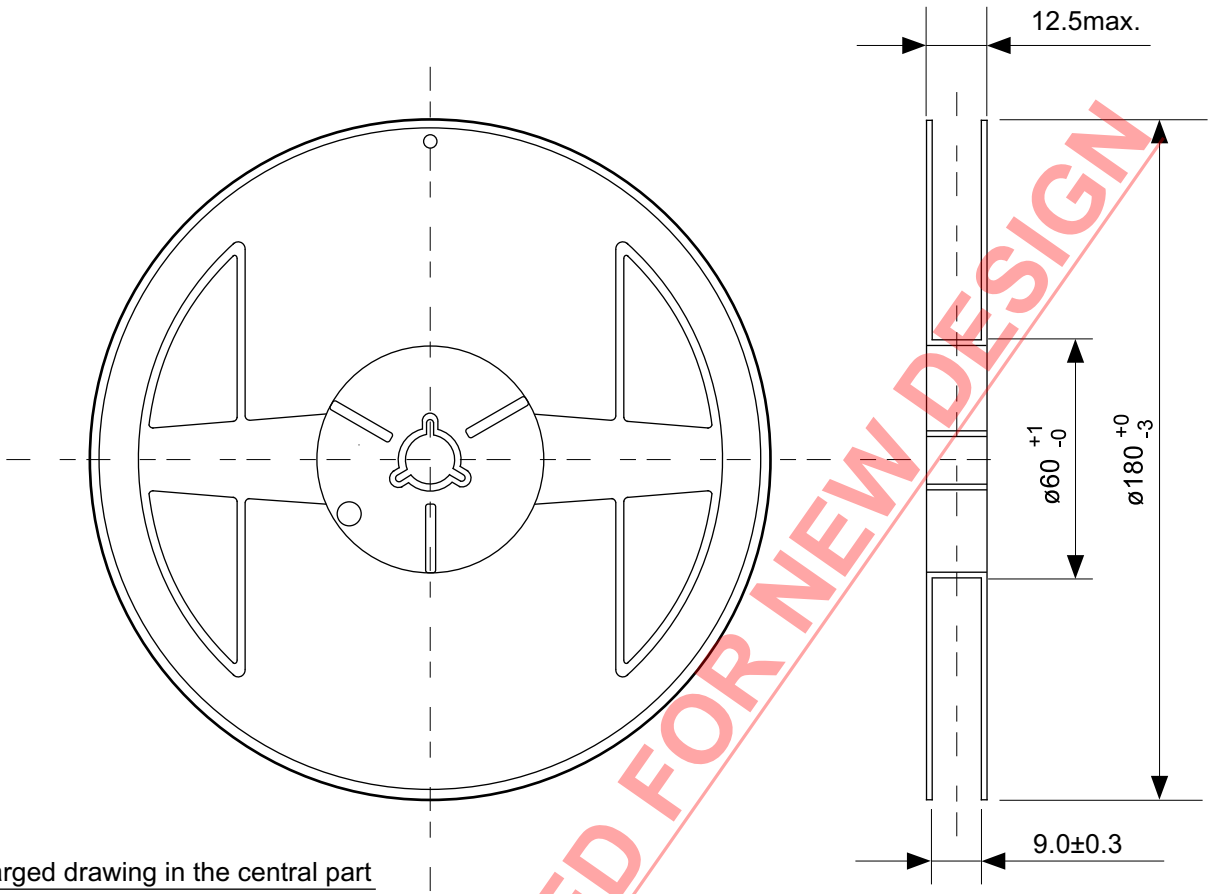

Enlarged drawing in the central part

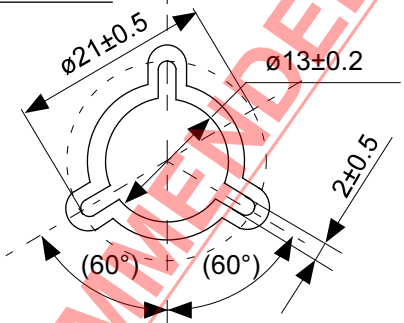

No. PG006-A-R-SD-1.0

NOT RECOMMENDED FOR NEW DESIGN

TITLE	SNT-6A-A-Reel		
No.	PG006-A-R-SD-1.0		
ANGLE		QTY.	5,000
UNIT	mm		
ABLIC Inc.			

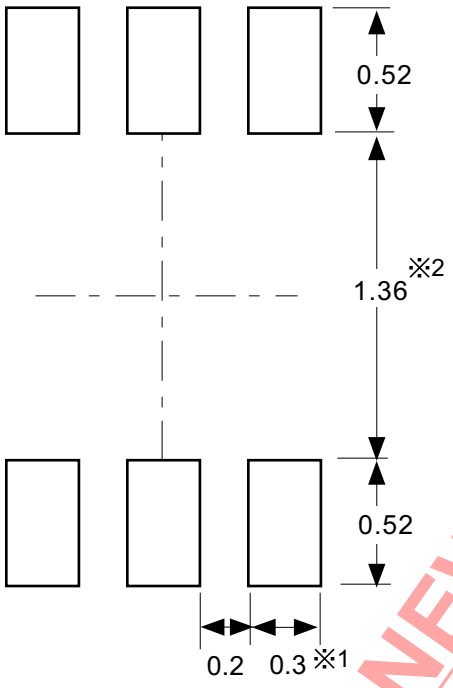

※1. ランドパターンの幅に注意してください (0.25 mm min. / 0.30 mm typ.)。
※2. パッケージ中央にランドパターンを広げないでください (1.30 mm ~ 1.40 mm)。

注意 1. パッケージのモールド樹脂下にシルク印刷やハンダ印刷などしないでください。
2. パッケージ下の配線上のソルダーレジストなどの厚みをランドパターン表面から0.03 mm 以下にしてください。
3. マスク開口サイズと開口位置はランドパターンと合わせてください。
4. 詳細は〝SNTパッケージ活用の手引き〟を参照してください。

※1. Pay attention to the land pattern width (0.25 mm min. / 0.30 mm typ.).
※2. Do not widen the land pattern to the center of the package (1.30 mm ~ 1.40 mm).

Caution 1. Do not do silkscreen printing and solder printing under the mold resin of the package.
2. The thickness of the solder resist on the wire pattern under the package should be 0.03 mm or less from the land pattern surface.
3. Match the mask aperture size and aperture position with the land pattern.
4. Refer to "SNT Package User's Guide" for details.

※1. 请注意焊盘模式的宽度 (0.25 mm min. / 0.30 mm typ.)。
※2. 请勿向封装中间扩展焊盘模式 (1.30 mm ~ 1.40 mm)。

注意 1. 请勿在树脂型封装的下面印刷丝网、焊锡。
2. 在封装下、布线上的阻焊膜厚度 (从焊盘模式表面起) 请控制在 0.03 mm 以下。
3. 钢网的开口尺寸和开口位置请与焊盘模式对齐。
4. 详细内容请参阅 "SNT 封装的应用指南"。

NOT RECOMMENDED FOR NEW DESIGN

No. PG006-A-L-SD-4.1

TITLE	SNT-6A-A -Land Recommendation
No.	PG006-A-L-SD-4.1
ANGLE	
UNIT	mm

ABLIC Inc.

Disclaimers (Handling Precautions)

1. All the information described herein (product data, specifications, figures, tables, programs, algorithms and application circuit examples, etc.) is current as of publishing date of this document and is subject to change without notice.
2. The circuit examples and the usages described herein are for reference only, and do not guarantee the success of any specific mass-production design.
   ABLIC Inc. is not responsible for damages caused by the reasons other than the products described herein (hereinafter "the products") or infringement of third-party intellectual property right and any other right due to the use of the information described herein.
3. ABLIC Inc. is not responsible for damages caused by the incorrect information described herein.
4. Be careful to use the products within their specified ranges. Pay special attention to the absolute maximum ratings, operation voltage range and electrical characteristics, etc.
   ABLIC Inc. is not responsible for damages caused by failures and / or accidents, etc. that occur due to the use of the products outside their specified ranges.
5. When using the products, confirm their applications, and the laws and regulations of the region or country where they are used and verify suitability, safety and other factors for the intended use.
6. When exporting the products, comply with the Foreign Exchange and Foreign Trade Act and all other export-related laws, and follow the required procedures.
7. The products must not be used or provided (exported) for the purposes of the development of weapons of mass destruction or military use. ABLIC Inc. is not responsible for any provision (export) to those whose purpose is to develop, manufacture, use or store nuclear, biological or chemical weapons, missiles, or other military use.
8. The products are not designed to be used as part of any device or equipment that may affect the human body, human life, or assets (such as medical equipment, disaster prevention systems, security systems, combustion control systems, infrastructure control systems, vehicle equipment, traffic systems, in-vehicle equipment, aviation equipment, aerospace equipment, and nuclear-related equipment), excluding when specified for in-vehicle use or other uses. Do not apply the products to the above listed devices and equipments without prior written permission by ABLIC Inc.
   Especially, the products cannot be used for life support devices, devices implanted in the human body and devices that directly affect human life, etc.
   Prior consultation with our sales office is required when considering the above uses.
   ABLIC Inc. is not responsible for damages caused by unauthorized or unspecified use of our products.
9. Semiconductor products may fail or malfunction with some probability.
   The user of the products should therefore take responsibility to give thorough consideration to safety design including redundancy, fire spread prevention measures, and malfunction prevention to prevent accidents causing injury or death, fires and social damage, etc. that may ensue from the products' failure or malfunction.
   The entire system must be sufficiently evaluated and applied on customer's own responsibility.
10. The products are not designed to be radiation-proof. The necessary radiation measures should be taken in the product design by the customer depending on the intended use.
11. The products do not affect human health under normal use. However, they contain chemical substances and heavy metals and should therefore not be put in the mouth. The fracture surfaces of wafers and chips may be sharp. Be careful when handling these with the bare hands to prevent injuries, etc.
12. When disposing of the products, comply with the laws and ordinances of the country or region where they are used.
13. The information described herein contains copyright information and know-how of ABLIC Inc.
    The information described herein does not convey any license under any intellectual property rights or any other rights belonging to ABLIC Inc. or a third party. Reproduction or copying of the information from this document or any part of this document described herein for the purpose of disclosing it to a third-party without the express permission of ABLIC Inc. is strictly prohibited.
14. For more details on the information described herein, contact our sales office.

NOT RECOMMENDED FOR NEW DESIGN

ENTEGRECİ

Bu belge www.entegreci.com üzerinden sunulmaktadır.

Elektronik komponent tedarikinde Entegreci

Entegreci, Eskişehir merkezli, Türkiye geneline satış yapan bir elektronik komponent mağazasıdır. Entegreler (IC), mikrodenetleyiciler, transistörler, diyotlar, pasif elemanlar, konnektörler, modüller ve geliştirme kartları tek adetten seri üretim adetlerine kadar satılır. Ürün sayfalarında güncel stok durumunu, fiyatı ve datasheet bağlantısını bulabilirsiniz.

Parça koduyla arama

Üretici parça numarasını yazın; stok ve fiyatı hemen görün.

www.entegreci.com

Ürün kategorileri

Entegreden kapasitöre tüm elektronik komponent kategorileri.

Kategorilere göz atın

Üreticiler

Aradığınız üreticinin ürünlerini tek sayfada inceleyin.

Üreticileri görün

Toplu alım ve teklif

Listede olmayan ya da yüksek adetli parçalar için teklif isteyin.

Teklif isteyin

www.entegreci.com | **destek@entegreci.com** | **0850 305 90 34**

Entegreci is an online electronic components store based in Türkiye. Search by manufacturer part number to see stock, prices and datasheets for integrated circuits, microcontrollers, transistors, passive components and connectors, or request a quote for parts that are not listed.

Bu sayfa Entegreci tarafından eklenmiştir. Belgenin önceki sayfaları asıl yayıncısına aittir ve içeriği değiştirilmemiştir; en güncel sürüm için belgenin yayıncısına başvurun.